Toyota Celica Supra MK2 -86

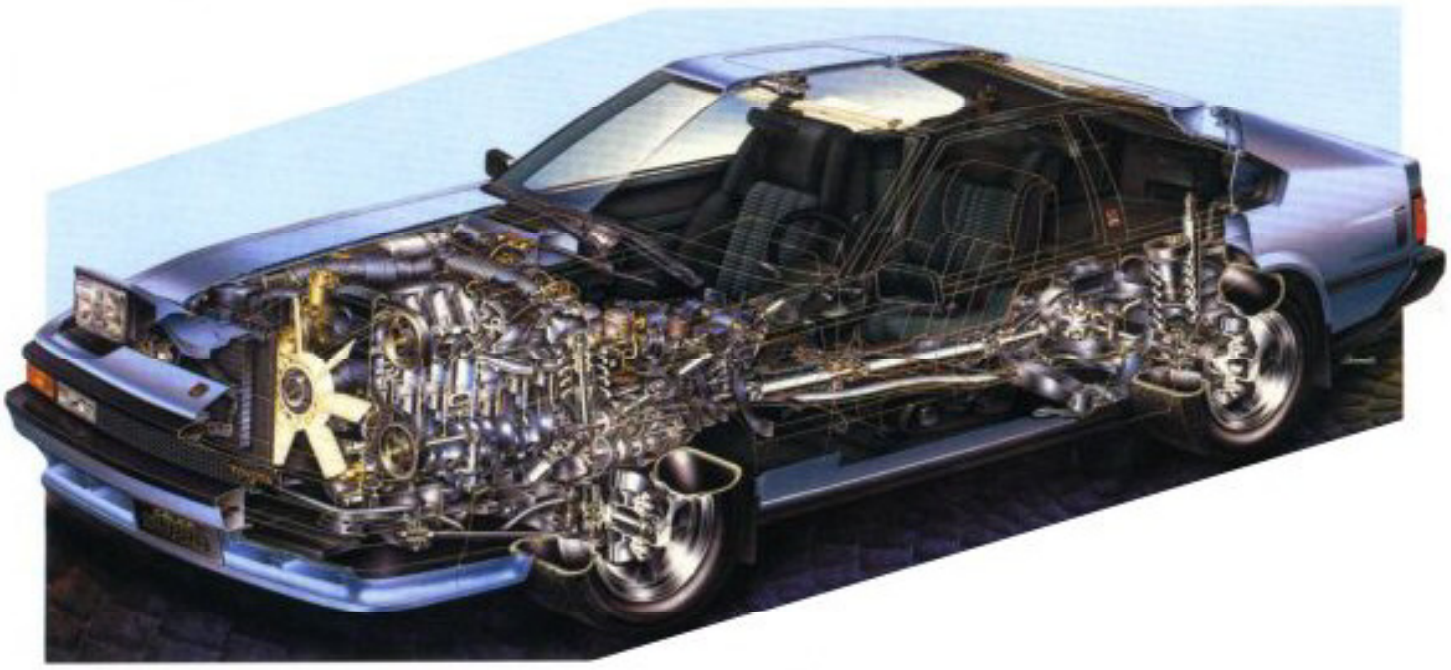

PDF created by joltcola@Finreactor.

Thanks to Cygnus X1 for publishing the original manual.

INTRODUCTION

	Page
HOW TO USE THIS MANUAL	IN-2
IDENTIFICATION INFORMATION	IN-4
GENERAL REPAIR INSTRUCTIONS	IN-4
PRECAUTIONS FOR VEHICLES EQUIPPED WITH A CATALYTIC CONVERTER	IN-7
VEHICLE LIFT AND SUPPORT LOCATIONS	IN-8
ABBREVIATIONS USED IN THIS MANUAL	IN-9

HOW TO USE THIS MANUAL

To assist in finding your way through the manual, the Section Title and major heading are given at the top of every page.

An **INDEX** is provided on the first page of each section to guide you to the item to be repaired.

At the beginning of each section, **PRECAUTIONS** are given that pertain to *all* repair operations contained in that section. *Read these precautions before starting any repair task.*

TROUBLESHOOTING tables are included for each system to help you diagnose the system problem and find the cause. The repair for each possible cause is referenced in the remedy column to quickly lead you to the solution.

REPAIR PROCEDURES

Most repair operations begin with an overview illustration. It identifies the components and shows how the parts fit together.

Example:

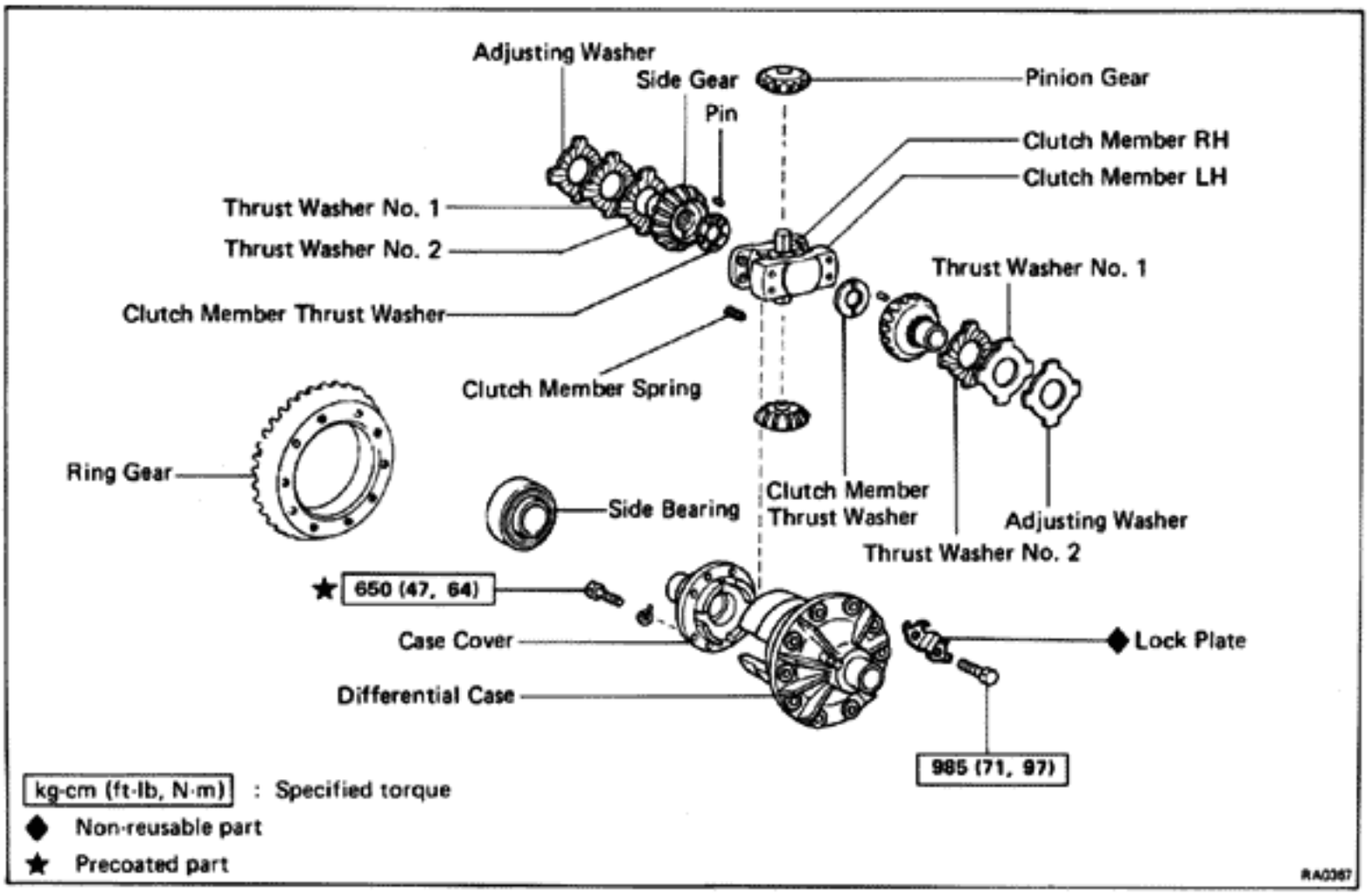

The procedures are presented in a step-by-step format:

- The photo or illustration shows *what* to do and *where* to do it.
- The task heading tells *what* to do.
- The detailed text tells *how* to perform the task and gives other information such as specifications and warnings.

Photograph or Illustration: what to do and where

Example:

Task heading: what to do

21. CHECK PISTON STROKE OF OVERDRIVE BRAKE

(a) Place SST and a dial indicator onto the overdrive brake piston as shown in the figure.

SST 09350-30020 (09350-06120)

Set part No. *Component part No.*

Detail text: how to do it

(b) Measure the stroke applying and releasing the compressed air (4 – 8 kg/cm², 57 – 114 psi or 392 – 785 kPa) as shown in the figure.

Piston stroke: 1.40 – 1.70 mm (0.0551 – 0.0669 in.)

Specification

This format provides the experienced technician with a FAST TRACK to the information needed. The upper case task heading can be read at a glance and only when necessary, the text below it provides detailed information. Important specifications and warnings always stand out in bold type.

REFERENCES

References have been kept to a minimum. However, when they are required you are given the page to go to.

SPECIFICATIONS

Specifications are presented in bold type throughout the text in the applicable step. You never have to leave the procedure to look up your specs. All specifications are also found in Appendex A, specifications, for quick reference.

WARNINGS, CAUTIONS, NOTES:

- WARNINGS are presented in bold type, and indicate there is a possibility of injury to you or other people.
- CAUTIONS are also presented in bold type, and indicate the possibility of damage to the components being repaired.
- NOTES are separated from the text but do not appear in bold. They provide additional information to help you efficiently perform the repair.

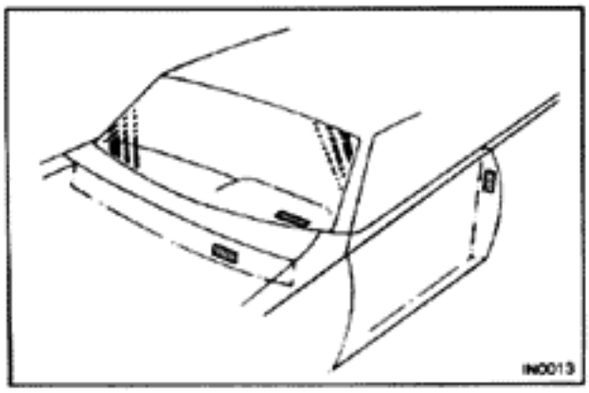

IDENTIFICATION INFORMATION

VEHICLE IDENTIFICATION NUMBER

The vehicle identification number is stamped on the cowl panel of the engine compartment. This number is also stamped on top of the instrument panel and the driver's door post.

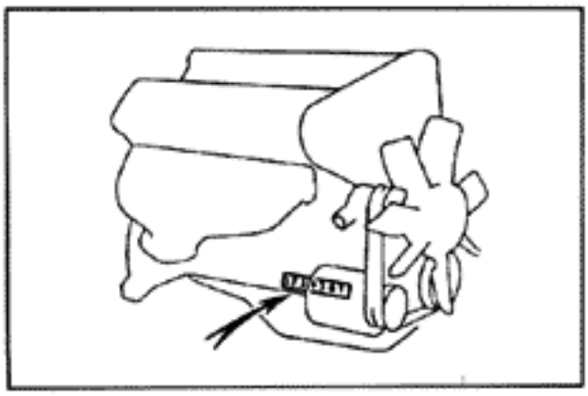

ENGINE SERIAL NUMBER

The engine serial number is stamped on the right side of the cylinder block.

GENERAL REPAIR INSTRUCTIONS

1. Use fender seat and floor covers to keep the vehicle clean and prevent damage.
2. During disassembly, keep parts in order to facilitate reassembly.
3. Observe the following:
   (a) Before performing electrical work, disconnect the nagative from the battery terminal.
   (b) If it is necessary to disconnect the battery for inspection or repair, always disconnect the cable from the negative (–) terminal which is grounded to the vehicle body.
   (c) To prevent damage to the battery terminal post, loosen the terminal nut and raise the cable straight up without twisting it or prying it.
   (d) Clean the battery terminal posts and cable terminals with a shop rag. Do not scrape them with a file or other adrasive object.
   (e) Install the cable terminal to the battery post with the nut loose, and tighten the nut after installation. Do not use a hammer to tap the terminal onto the post.
   (f) Be sure the cover for the positive (+) terminal is properly in place.
4. Check hose and wiring connectors to make sure that they are secure and correct.

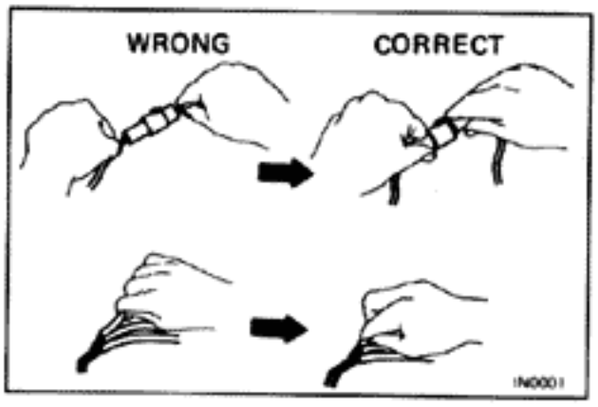

12. Observe the following precautions to avoid damage to the parts:
    (a) To disconnect vacuum hoses, pull on the end, not the middle of the hose.
    (b) To pull apart electrical connectors, pull on the connector itself, not the wires.
    (c) Be careful not to drop electrical components, such as sensors or relays. If they are dropped on a hard floor, they should be replaced and not reused.
    (d) When steam cleaning an engine, protect the distributor, coil, air filter, carburetor intake, air pump and VCV from water.
    (e) Never use an impact wrench to remove or install thermo switches or thermo sensors.
    (f) When checking continuity at the wire connector, insert the tester probe carefully to prevent terminals from bending.
    (g) When using a vacuum gauge, never force the hose onto a connector that is too large. Use a step-down adapter instead. Once the hose has been stretched, it may leak.

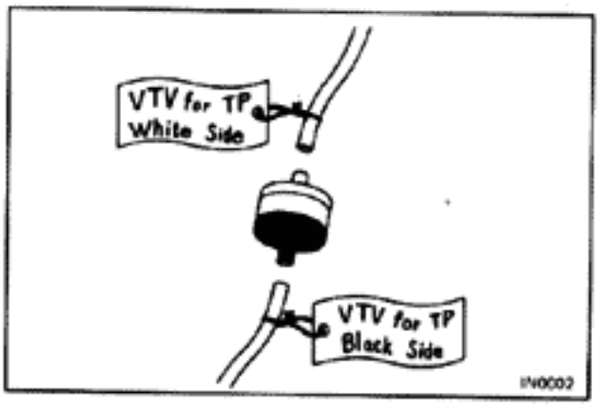

13. Tag hoses before disconnecting them:
    (a) When disconnecting vacuum hoses, use tags to identify how they should be reconnected.
    (b) After completing a job, double check that the vacuum hoses are properly connected. A label under the hood shows the proper layout.

VEHICLE LIFT AND SUPPORT LOCATIONS

Front

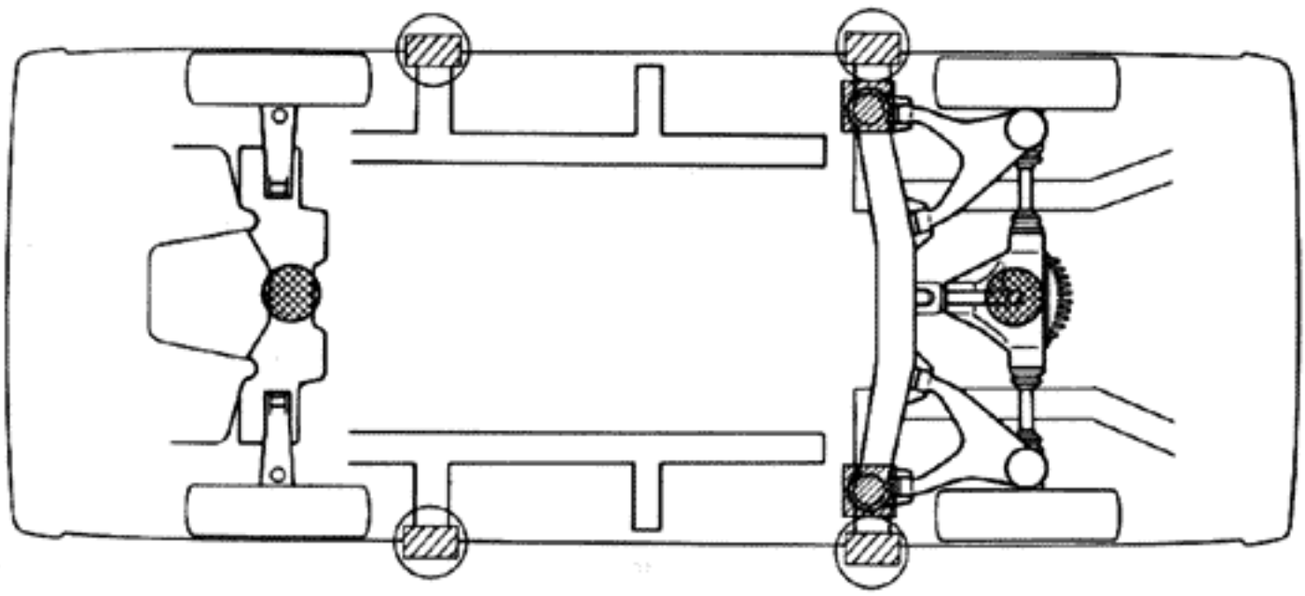

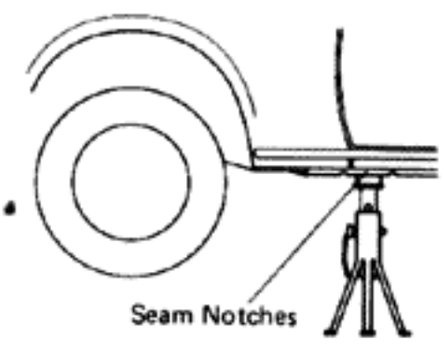

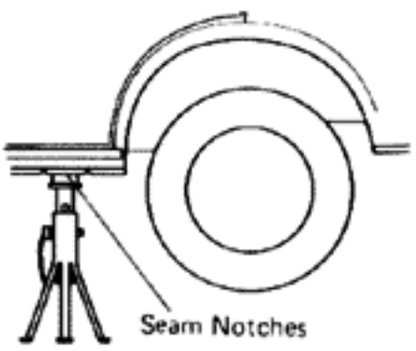

JACK POSITION

Front ..... Center of crossmember
Rear ..... Center of rear axle housing

PANTOGRAPH JACK POSITION

SUPPORT POSITION

Safety stand .....

ABBREVIATIONS USED IN THIS MANUAL

A/C	Air Conditioner
ALR	Automatic Locking Retractor
A/T, ATM	Automatic Transmission
ATF	Automatic Transmission Fluid
B_0	Overdrive Brake
B_1	No. 1 Brake
B_2	No. 2 Brake
B_3	No. 3 Brake
BDC	Bottom Dead Center
BTDC	Before Top Dead Center
BVSV	Bimetal Vacuum Switching Valve
C_0	Overdrive Direct Clutch
C_1	Front Clutch
C_2	Rear Clutch
C/B	Circuit Breaker
DOHC	Double Over Head Cam
DP	Dash Pot
DVV	Double Vacuum Valve
ECT	Electronic Controlled Transmission
ECU	Electronic Controlled Unit
EFI	Electronic Fuel Injection
EGR	Exhaust Gas Recirculation
ELR	Emergency Locking Retractor
EPR	Evaporator Pressure Regulator
ESA	Electronic Spark Advance
ETR	Electronic Tuning Radio
EVAP	Evaporative (Emission Control)
EX	Exhaust (manifold, valve)
Ex.	Except
F_L	Front Left
F_R	Front Right
IG	Ignition
IN	Intake (manifold, valve)
IRS	Independent Rear Suspension
ISC	Idle Speed Control
LH	Left-hand
LHD	Left-hand Drive
LSD	Limited Slip Differential
MP	Multipurpose
M/T, MTM	Manual Transmission
OD	Overdrive
OPT	Option
O/S	Oversize
PCV	Positive Crankcase Ventilation
PS	Power Steering
RH	Right-hand
R_L	Rear Left
R_R	Rear Right
SED	Sedan
SSM	Special Service Materials
SST	Special Service Tools
STD	Standard
S/W	Switch
T/C	Torque Converter
TCCS	Toyota Computer Controlled System
TDC	Top Dead Center
TWC	Three-Way Catalyst
U/S	Undersize
VSV	Vacuum Switching Valve
w/	With
w/o	Without

MAINTENANCE

	Page
MAINTENANCE SCHEDULE	MA-2
MAINTENANCE OPERATIONS	MA-4
GENERAL MAINTENANCE	MA-12

GENERAL NOTES:

- Every service item in the periodic maintenance list must be performed.
- Failure to do even one item can cause the engine to run poorly and increase exhaust emissions.

MAINTENANCE SCHEDULE

Maintenance operations: A = Check and/or adjust if necessary;
R = Replace, change or lubricate;
I = Inspect and correct or replace if necessary

NORMAL CONDITION SCHEDULE

System	Service interval (Odometer reading or months, whichever comes first) / Maintenance items	Maintenance services beyond 60,000 miles (96,000 km) should be performed at the same intervals shown in each maintenance schedule.						See page (item No.)
		Miles x 1,000	10	20	30	40	50	60	
		Km x 1,000	16	32	48	64	80	96	
		Months	12	24	36	48	60	72	
ENGINE	Drive belts(1)				I			I	MA-4 (item 2)
	Engine oil and oil filter*		R	R	R	R	R	R	MA-5 (item 6)
	Engine coolant(2)							R	MA-5 (item 7)
	Exhaust pipes and mountings				I			I	MA-6 (item 11)
FUEL	Air filter*				R			R	MA-5 (item 4)
	Fuel line and connections				I			I	MA-6 (item 10)
	Fuel filler cap gasket							R	MA-6 (item 9)
IGNITION	Spark plugs (Platinum tipped)							R	MA-5 (item 3)
EVAP	Charcoal canister							I	MA-6 (item 8)
BRAKES	Brake lining and drums			I		I		I	MA-8 (item 14)
	Brake pads and discs (Front and rear)			I		I		I	MA-7 (item 13)
	Brake line pipes and hoses			I		I		I	MA-7 (item 12)
CHASSIS	Steering linkage			I		I		I	MA-8 (item 15)
	Ball joints and dust covers			I		I		I	MA-9 (item 17)
	Automatic transmission, manual transmission, differential (ex. LSD) and steering gear housing oil(3)			I		I		I	MA-9 (item 18) MA-8 (item 16)
	Limited slip differential (LSD) oil (4)			I		R		I	MA-9 (item 19)
	Front and rear (IRS only) wheel bearings grease (4)					R			MA-10 (item 21)
	Bolts and nuts on chassis and body			I		I		I	MA-11 (item 22)

Maintenance services indicated by a star (*) is required under the terms of the Emission Control Systems Warranty. See Owner's Guide for complete warranty information.

NOTE:

(1) After 60,000 miles (96,000 km) or 72 months, inspect every 10,000 miles (16,000 km) or 12 months.

(2) After 60,000 miles (96,000 km) or 72 months, replace every 30,000 miles (48,000 km) or 36 months.

(3) Inspect the steering gear housing for oil leakage only.

(4) Change every 40,000 miles (64,000 km) or 48 months.

Follow the severe condition schedule if vehicle is operated mainly under one or more of the following severe conditions:

- Towing a trailer, using a camper or car top carrier.
- Operating on dusty, rough, muddy or salt spread roads.
- Repeat short trips less than 5 miles (8 km) and outside temperatures remain below freezing.
- Extensive idling such as police, taxi or door-to-door delivery use.

SEVERE CONDITION SCHEDULE

System	Service interval (Odometer reading or months, whichever comes first) / Maintenance items	Maintenance services beyond 60,000 miles (96,000 km) should be performed at the same intervals shown in each maintenance schedule.												See page (item No.)
	Miles x 1,000	5	10	15	20	25	30	35	40	45	50	55	60	
	Km x 1,000	8	16	24	32	40	48	56	64	72	80	88	96	
	Months	6	12	18	24	30	36	42	48	54	60	66	72	
Engine	Timing belt	(1) R												MA-4 (item 1)
	Drive belts(2)						I						I	MA-4 (item 2)
	Engine oil and oil filter*	R	R	R	R	R	R	R	R	R	R	R	R	MA-5 (item 6)
	Engine coolant(3)												R	MA-5 (item 7)
	Exhaust pipes and mountings			I			I			I			I	MA-6 (item 11)
FUEL	Air filter*(4)	I	I	I	I	I	R	I	I	I	I	I	R	MA-5 (item 4 or 5)
	Fuel line and connections						I						I	MA-6 (item 10)
	Fuel filler cap gasket												R	MA-6 (item 9)
IGNITION	Spark plugs (Platinum tipped)												R	MA-5 (item 3)
EVAP	Charcoal canister												I	MA-6 (item 8)
BRAKES	Brake linings and drums		I		I		I		I		I		I	MA-8 (item 14)
	Brake pads and discs (Front and rear)		I		I		I		I		I		I	MA-7 (item 13)
	Brake line pipes and hoses				I				I				I	MA-7 (item 12)
CHASSIS	Steering linkage		I		I		I		I		I		I	MA-8 (item 15)
	Ball joints and dust covers		I		I		I		I		I		I	MA-9 (item 17)
	Automatic transmission, manual transmission, differential and steering gear housing oil(5)				R				R				R	MA-9 (item 19) MA-10 (item 20) MA-8 (item 16)
	Front and rear (IRS only) wheel bearings grease(6)								R					MA-10 (item 21)
	Bolts and nuts on chassis and body(7)		I		I		I		I		I		I	MA-11 (item 22)

Maintenance services indicated by a star (*) is required under the terms of the Emission Control Systems Warranty. See Owner's Guide for complete warranty information.

NOTE:

(1) For the vehicles frequently idled for extensive periods and/or driven for long distance at low speeds such as taxi, police and door-to-door delivery, it is recommended to change at 60,000 miles (96,000 km).
(2) After 60,000 miles (96,000 km) or 72 months, inspect every 10,000 miles (16,000 km) or 12 months.
(3) After 60,000 miles (96,000 km) or 72 months, replace every 30,000 miles (48,000 km) or 36 months.
(4) Applicable when operating mainly on dusty roads. If not, follow the normal condition schedule.
(5) Inspect the steering gear housing for oil leakage only.
(6) Change every 40,000 miles (64,000 km) or 48 months.
(7) Applicable when operating mainly on rough and/or muddy roads. If not, follow the normal condition schedule.

MAINTENANCE OPERATIONS

ENGINE

Cold Engine Operations

1. **REPLACE TIMING BELT**

   (a) Remove the timing belt.
   (See pages EM-11 to 13)

   (b) Install the timing belt.
   (See pages EM-15 to 17)

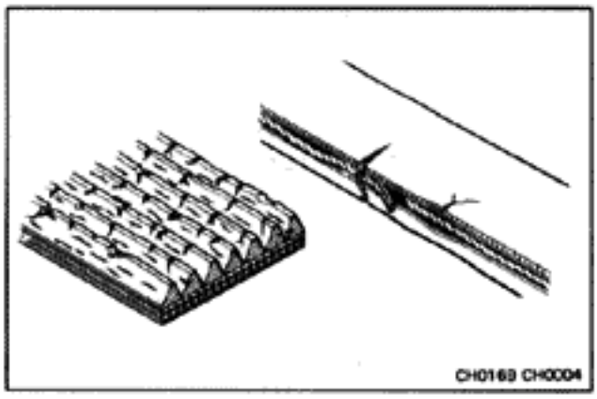

2. **INSPECT V-RIBBED TYPE DRIVE BELT (ALTERNATOR) AND CONVENTIONAL TYPE DRIVE BELTS (PS PUMP AND A/C COMPRESSOR)**

   (a) Visually check the belt for separation of the adhesive rubber above and below the core, core separation from the belt side, severed core, separation of the rib from the adhesive rubber, cracking or separation of the ribs, torn or worn ribs or cracks in the inner ridges of the ribs. Conventional type only: Check that the belt does not touch the bottom of the pulley groove.
   If necessary, replace the drive belt.

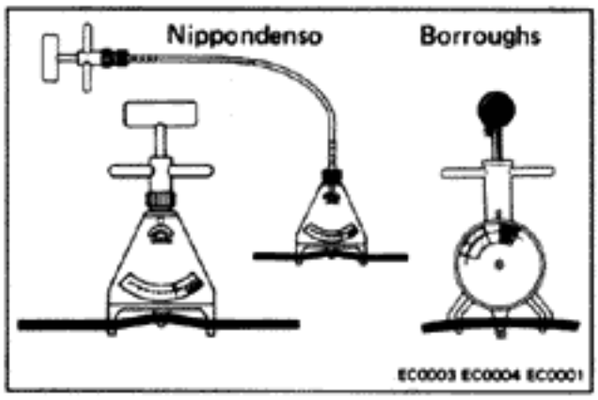

   (b) Using a belt tension gauge, check the drive belt tension.

   Belt tension gauge:
   Nippondenso BTG-20 (95506-00020) or
   Borroughs No. BT-33-73F

   Drive belt tension:

V-ribbed type	**Used belt**	**135 ± 20 lb**
	New belt	**170 ± 10 lb**
Conventional type	**Used belt**	**80 ± 20 lb**
	New belt	**125 ± 25 lb**

   If necessary, adjust the drive belt tension.

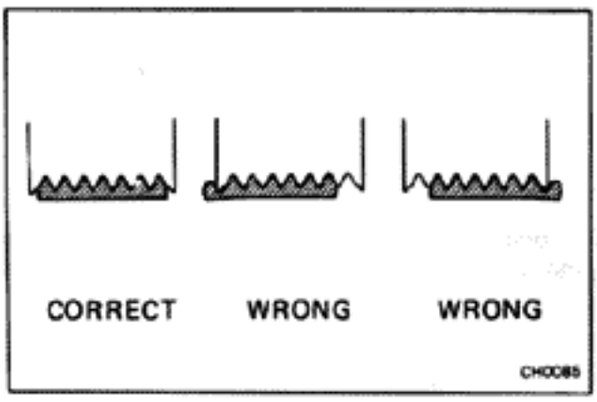

NOTE:
- "New belt" refers to a belt which has been used less than 5 minutes on a running engine.
- "Used belt" refers to a belt which has been used on a running engine for 5 minutes or more.
- After replacing the drive belt, check that it fits properly in the ribbed grooves, especially in the places difficult to see.
- After installing a new belt, run the engine for about 5 minutes and then recheck the tension.

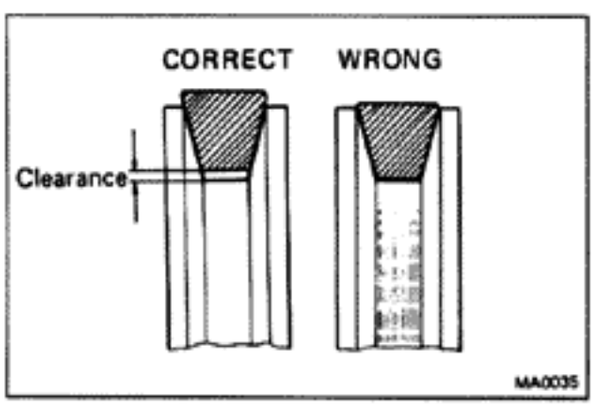

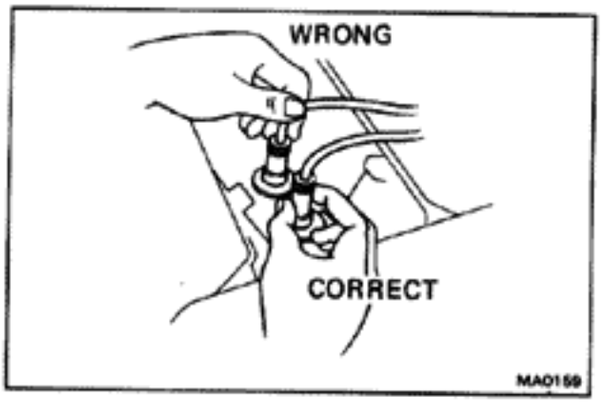

3. REPLACE SPARK PLUGS (PLATINUM TIPPED)

(a) Disconnect the spark plug wires at the boot.
DO NOT pull on the wires.

(b) Remove the spark plugs.

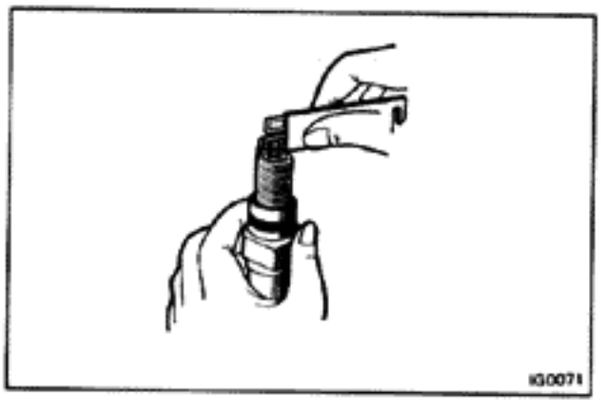

(c) Check the gap on the new plugs.

Gap: 1.1 mm (0.043 in.)

Recommended spark plugs:

ND	P16R
NGK	BPR5EP11

NOTE: If adjusting the gap of a new plug, bend only the base of the ground electrode. Do not touch the tip. Never attempt to adjust the gap on a used plug.

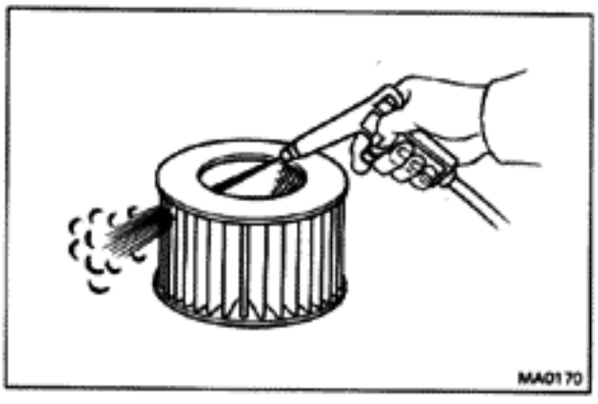

4. INSPECT AIR FILTER

(a) Visually check that the air cleaner element is not excessively dirty, damaged or oily.

(b) Clean the element with compressed air.
First blow from the back side thoroughly. Then blow off the front side of the element.

5. REPLACE AIR FILTER

Replace the air cleaner element with a new one.

6. REPLACE ENGINE OIL AND OIL FILTER

(See page LU-3)

Engine oil grade:
API grade SF or SF/CC, multigrade viscosity and fuel-efficient oil

Engine oil capacity (Drain and refill with oil filter change):
5.1 liters (5.4 US qts, 4.5 Imp. qts)

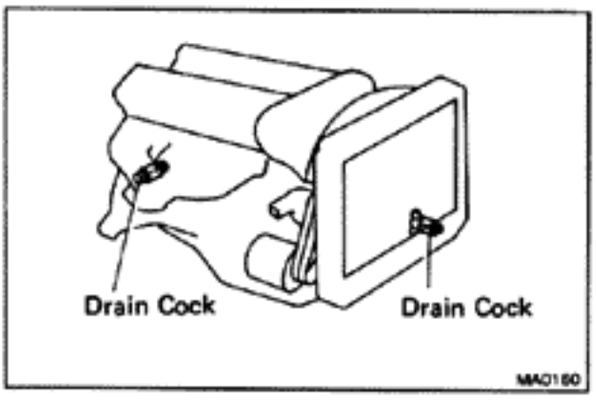

7. REPLACE ENGINE COOLANT

(a) Drain the coolant from the radiator and engine drain cocks. (Engine drain is at right rear of engine block.)

(b) Close the drain cocks.

(c) Fill system with coolant.

Coolant capacity (w/ heater or air conditioner):
M/T 8.0 liters (8.5 US qts, 7.0 Imp. qts)
A/T 7.9 liters (8.3 US qts, 7.0 Imp. qts)

Use a good brand of ethylene-glycol base coolant, mixed according to the manufacturer's instructions.

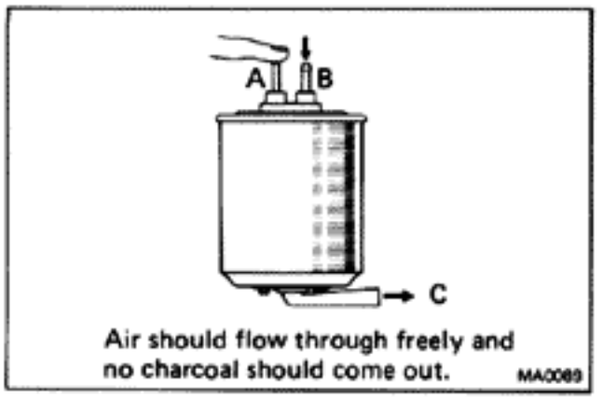

Air should flow through freely and no charcoal should come out. MA0069

8. INSPECT CHARCOAL CANISTER

(a) Disconnect the hoses to the charcoal canister located near the rear exhaust manifold. Label the hoses for correct installation.

(b) Plug pipe A with your finger and blow compressed air (3 kg/cm², 43 psi or 294 kPa) through pipe B (fuel tank side).

- Check that air comes out of the bottom pipe C without resistance.
- Check that no activated charcoal comes out.

If necessary, replace the charcoal canister.

NOTE: Do not attempt to wash the charcoal.

(c) Connect the hoses to the charcoal canister.

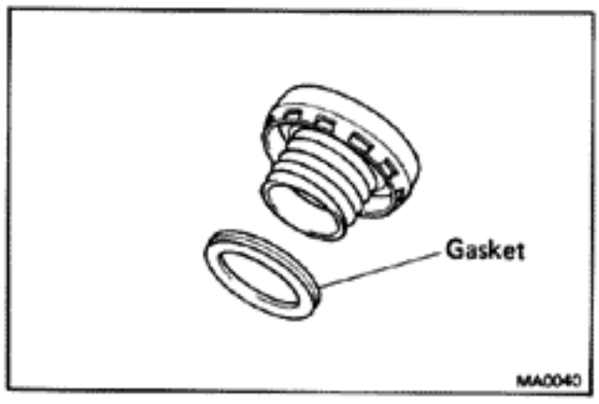

MA0040

9. REPLACE GASKET IN FUEL FILLER CAP

(a) Remove the old gasket (O-ring) from the fuel filler cap. Do not damage the cap.

(b) Install the new gasket by hand.

(c) Inspect the cap for damage or cracks.

(d) Install the cap and check the torque limiter.

10. INSPECT FUEL LINES AND CONNECTIONS
(See page FI-57)

Visually inspect the fuel lines for cracks, leakage, loose connections, deformation or tank band looseness.

11. INSPECT EXHAUST PIPES AND MOUNTINGS

Visually inspect the pipes, hangers, and connections for severe corrosion, leaks or damage.

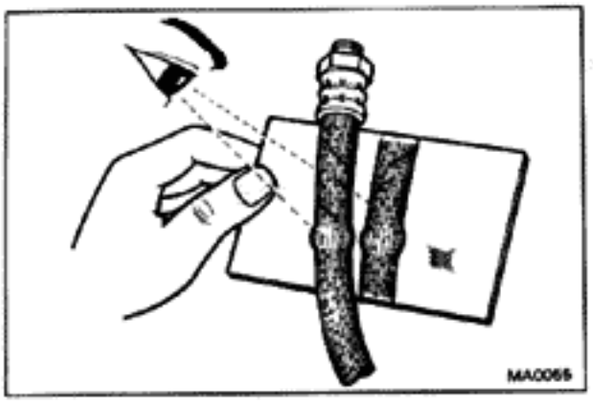
MA0065

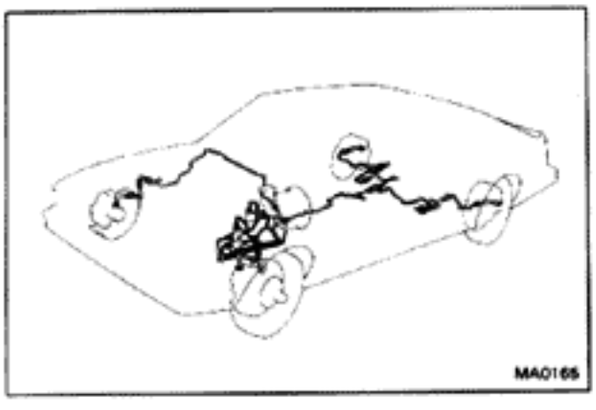
MA0165

BRAKES

12. INSPECT BRAKE LINE PIPES AND HOSES

NOTE: Inspect in a well lighted area. Inspect the entire circumference and length of the brake hoses using a mirror as required. Turn the front wheels fully right or left before inspecting the front brake.

(a) Check all brake lines and hoses for:

- Damage
- Corrosion
- Wear
- Leaks
- Deformation
- Bends
- Cracks
- Twists

(b) Check all clamps for tightness and connections for leakage.

(c) Check that the hoses and lines are clear of sharp edges, moving parts and the exhaust system.

(d) Check that the lines installed in grommets, pass through the center of the grommets.

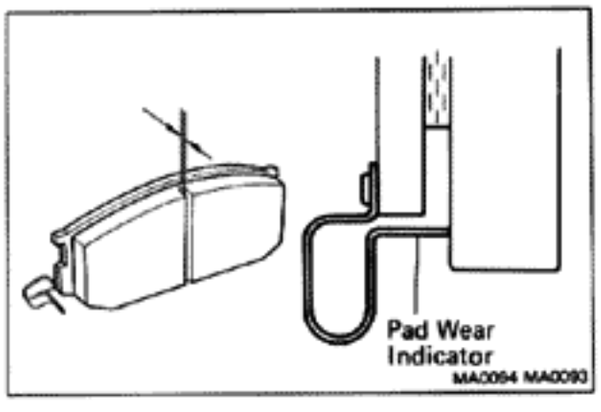

MA0094 MA0093

13. INSPECT FRONT AND REAR BRAKE PADS AND DISCS

(Front: See page BR-14, Rear: See page BR-20)

(a) Check the thickness of the disc brake pads and check for irregular wear.

Minimum pad thickness: 3.0 mm (0.118 in.)

NOTE: If a squealing or scraping noise occurs from the front or rear brakes during driving, check the pad wear indicator. If there are traces of the indicator contacting the disc rotor, the disc pad should be replaced.

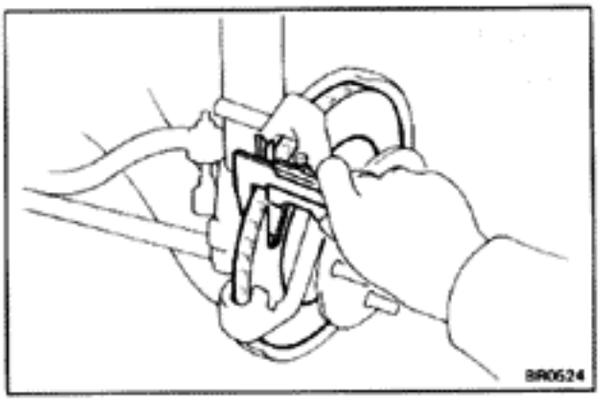
BR0524

(b) Check the disc for wear or runout.

Minimum disc thickness:

Front 19.0 mm (0.748 in.)
Rear 17.0 mm (0.669 in.)

Maximum disc runout: 0.15 mm (0.0059 in.)

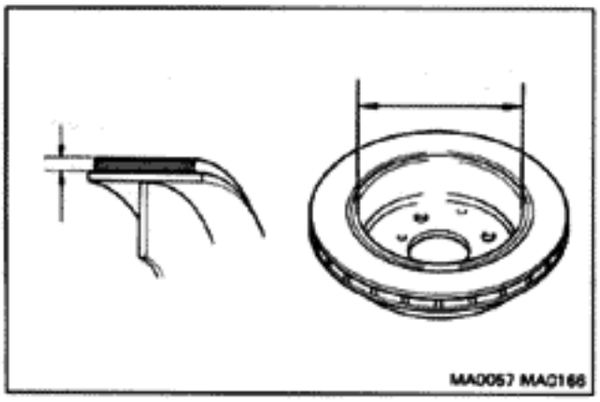

14. **INSPECT PARKING BRAKE LININGS AND DRUMS** **(See page BR-26)**

(a) Check the lining-to-drums contact condition and lining wear.

Minimum lining thickness: 1.0 mm (0.039 in.)

(b) Check the brake drums for scoring or wear.

Maximum drum inside diameter: 168 mm (6.61 in.)

(c) Clean the brake parts with a damp cloth.

NOTE: Do not use compressed air to clean the brake parts.

(d) Bed down the parking brake shoes and drum. When performing the road test in item 24, do the following:

- Drive the vehicle at about 30 mph (50 km/h) on a safe, level and dry road.
- With the parking brake release button pushed in, pull on the lever with 20 lb (9 kg, 88 N) of force.
- Drive the vehicle for about 1/4 mile (400 meters) in this condition.
- Repeat this procedure 2 or 3 times.
- Check parking brake lever travel.

If necessary, adjust the parking brake.

CHASSIS

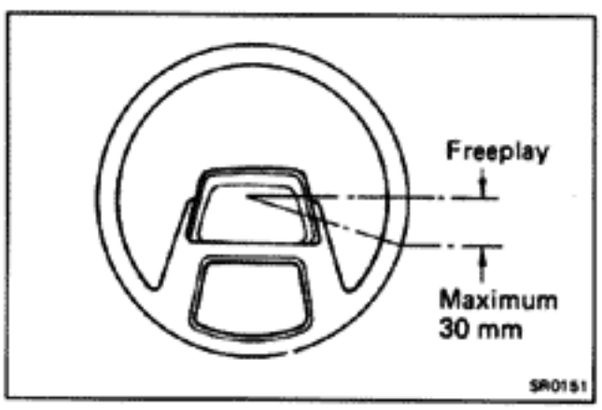

15. **INSPECT STEERING LINKAGE**

(a) Check that the steering wheel freeplay.

Maximum steering wheel freeplay: 30 mm (1.18 in.)

With the vehicle stopped and pointed straight ahead, rock the steering wheel gently back and forth with light finger pressure.

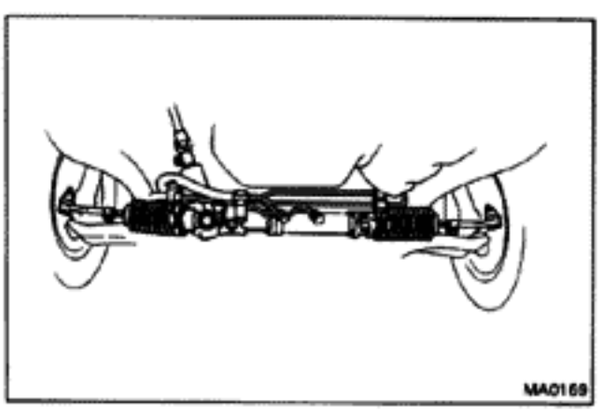

(b) Check the steering linkage for looseness and damage. Check that:

- Tie rod ends so not have excessive play.
- Dust seals and boots are not damaged.
- Boot clamps are not loose.

16. **INSPECT STEERING GEAR HOUSING**

Check the steering gear housing for oil leakage.

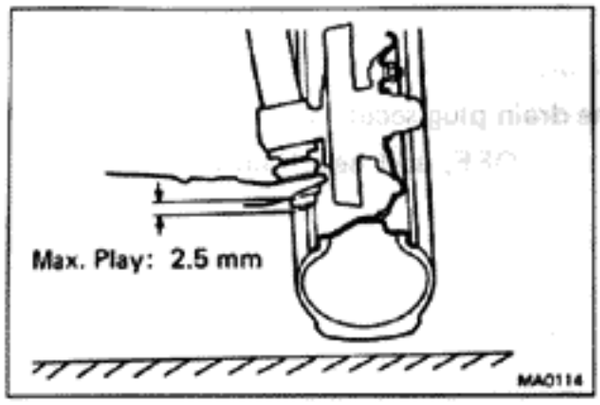

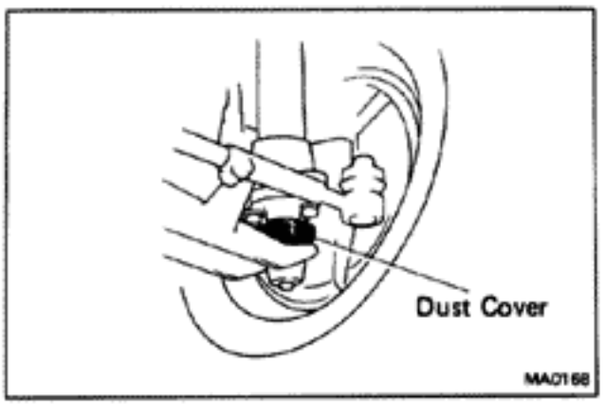

17. INSPECT BALL JOINTS AND DUST COVERS

(a) Inspect the ball joints for excessive looseness.

- Jack up the front of the vehicle and place wooden blocks with a height of 180 – 200 mm (7.09 – 7.87 in.) under the front tires.
- Lower the jack until there is about half a load on the front coil springs. Place stands under the vehicle for safety.
- Make sure the front wheels are in a straightforward position, and block them with chocks.
- Using a lever, pry up the end of the lower arm, and check the amount of play.

Maximum ball joint vertical play: 2.5 mm (0.098 in.)

If excessive play is found, replace the ball joints.

(b) Inspect the dust cover for damage.

18. CHECK AUTOMATIC TRANSMISSION OR MANUAL TRANSMISSION AND DIFFERENTIAL OIL

Visually check the automatic transmission or manual transmission and differential for oil leakage.

If leakage is found, check for cause and repair.

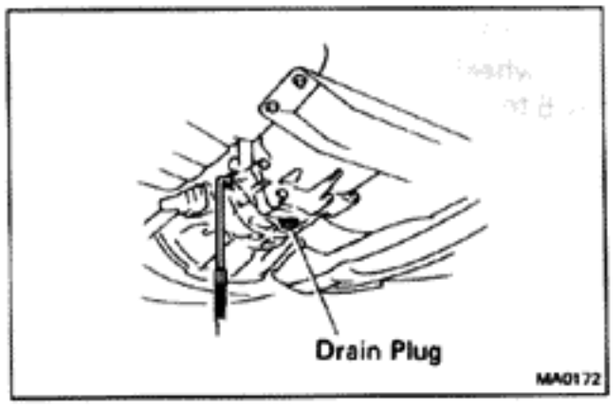

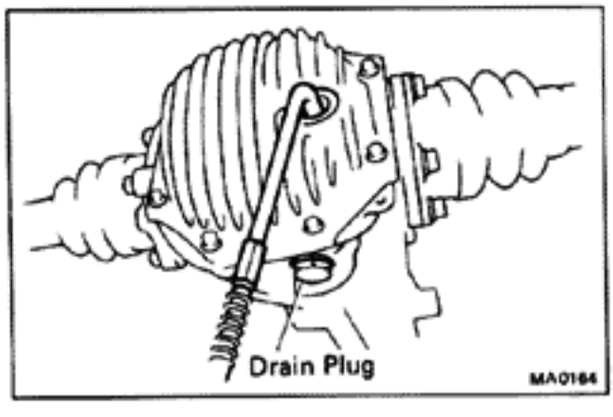

19. REPLACE MANUAL TRANSMISSION AND DIFFERENTIAL OIL

(a) Remove the drain plug and drain the oil.

(b) Reinstall the drain plug.

(c) Add new oil until it begins to run out of the filler hole.

Transmission oil –

Oil grade:	**API GL-4 or GL-5**
Viscosity:	**SAE 75W-90 or 80W-90**
Capacity:	**2.4 liters (2.5 US qts, 2.1 Imp. qts)**

Differential oil –

Oil grade:	**API GL-5 hypoid gear oil or for LSD oil (LSD only)**
Viscosity:	**Above –18°C (0°F) SAE 90** **Below –18°C (0°F) SAE 80W-90 or 80W**
Capacity:	**1.2 liters (1.3 US qts, 1.1 Imp. qts)**

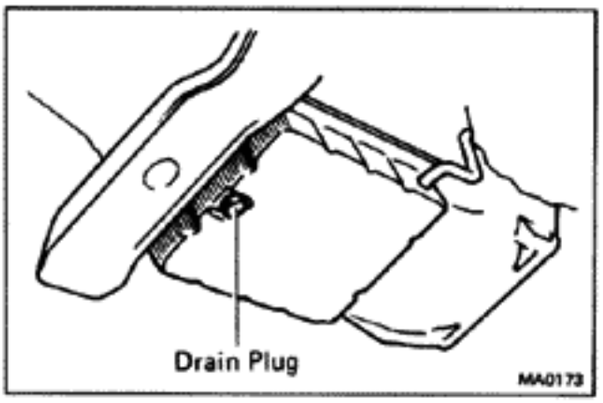

20. REPLACE AUTOMATIC TRANSMISSION FLUID

(a) Remove the drain plug and drain the fluid.

(b) Reinstall the drain plug securely.

(c) With the engine OFF, add new fluid through the dipstick tube.

Fluid: ATF DEXRON® II

Drain and refill capacity:
2.4 liters (2.5 US qts, 2.1 Imp. qts)

Dry fill capacity:
6.5 liters (6.9 US qts, 5.7 Imp. qts)

(d) Start the engine and shift the selector into all positions from "P" through "L", and then shift into "P".

(e) With the engine idling, check the fluid level.
Add fluid up to the "COOL" level on the dipstick.

CAUTION: Do not overfill.

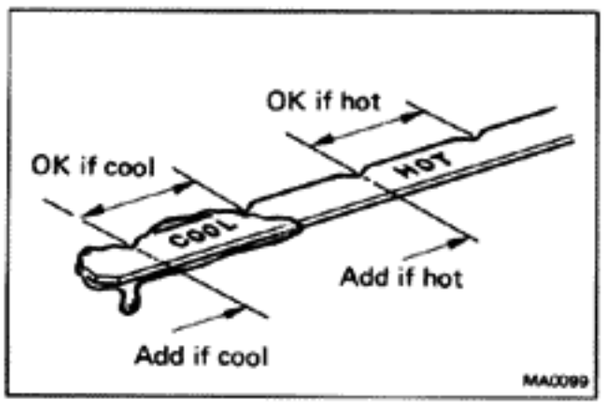

21. REPACK FRONT AND REAR (IRS ONLY) WHEEL BEARINGS

(a) Change the front wheel bearing grease.
(See pages FA-6 to 9)

Grease grade: Multipurpose grease (NLGI No. 2)

Front wheel bearing friction preload (while turning):
0 – 1,050 g (0 – 2.3 lb, 0 – 10 N)
In addition to oil seal frictional force

SEE PAGES FA-6 to 9

(b) IRS Type Rear Axle

Change the rear wheel bearing grease.
(See pages RA-5 to 11)

SEE PAGES RA-5 to 11



Front Suspension

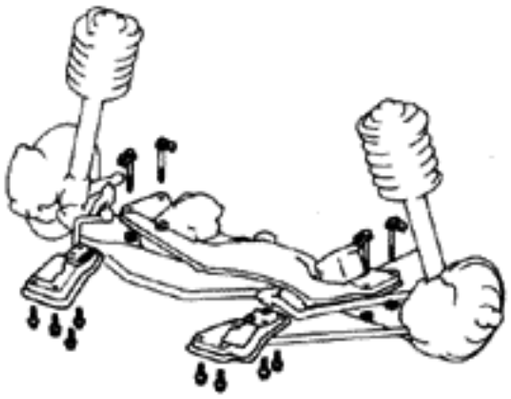

Rear Suspension

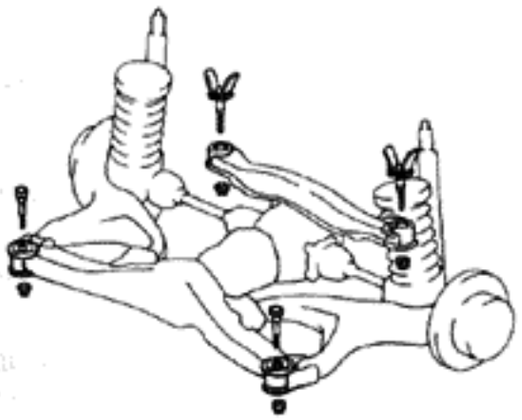

MA0116
MA0194
MA0195

22. TIGHTEN BOLTS AND NUTS ON CHASSIS AND BODY

Tighten the following parts:

- Front seat mountings bolts

Torque: 375 kg-cm (27 ft-lb, 37 N·m)

- Front suspension member-to-body mounting bolts and nuts

Torque: 800 kg-cm (58 ft-lb, 78 N·m)

- Rear suspension member-to-body mounting bolts and nuts

Torque: 1,200 kg-cm (87 ft-lb, 118 N·m)

- Strut bar bracket-to-body mounting bolts

Torque: 425 kg-cm (31 ft-lb, 42 N·m)

23. FINAL INSPECTION

(a) Check the operation of the body parts:

- Hood
  Auxiliary catch operates properly
  Hood locks securely when closed
- Front doors
  Door locks operate properly
  Doors close properly
- Lift back door
  Door lock operates properly
- Seats
  Seat adjusts easily and locks securely at any position
  Front seat back locks securely at any position
  Folding-down rear seat backs lock securely

(b) Road test

- Check the engine and chassis for abnormal noises.
- Check that the vehicle does not wander or pull to one side
- Check that the brakes work properly and do not drag.
- Perform bedding down of the parking brake shoes and drum. (See page MA-8)

(c) Be sure to deliver a clean car and especially check:

- Steering wheel
- Shift lever knob
- All switch knobs
- Door handles
- Seats

GENERAL MAINTENANCE

These are the maintenance and inspection items which are considered to be the owner's responsibility. They can be performed by the owner or he can have them done at a service shop. These items include those which should be checked on a daily basis, those which, in most cases, do not require (special) tools and those which are considered to be reasonable for the owner to perform.
Items and procedures for general maintenance are as follows.

OUTSIDE VEHICLE

1. TIRES

(a) Check the pressure with a gauge. If necessary, adjust.

(b) Check for cuts, damage or excessive wear.

2. WHEEL NUTS

When checking the tires, check the nuts for looseness or for missing nuts. If necessary, tighten them.

3. TIRE ROTATION

It is recommended that tires be rotated every 7,500 miles (12,000 km).

4. WINDSHIELD WIPER BLADES

Check for wear or cracks whenever they do not wipe clean. If necessary, replace.

5. FLUID LEAKS

(a) Check underneath for leaking fuel, oil, water or other fluid.

(b) If you smell gasoline fumes or notice any leak, have the cause found and corrected.

6. DOORS AND ENGINE HOOD

(a) Check that all doors including the trunk lid, back door and tailgate operate smoothly, and that all latches lock securely.

(b) Check that the engine hood secondary latch secures the hood from opening when the primary latch is released.

INSIDE VEHICLE

7. LIGHTS

(a) Check that the headlights, stop lights, taillights, turn signal lights, and other lights are all working.

(b) Check the headlight aim.

8. WARNING LIGHTS AND BUZZERS

Check that all warning lights and buzzers function properly.

9. HORN

Check that it is working.

10. WINDSHIELD GLASS

Check for scratches, pits or abrasions.

11. WINDSHIELD WIPER AND WASHER

(a) Check operation of the wipers and washer.

(b) Check that the wipers do not streak.

12. WINDSHIELD DEFROSTER

Check that air comes out from the defroster outlet when operating the heater or air conditioner.

13. REAR VIEW MIRROR

Check that it is mounted securely.

14. SUN VISORS

Check that they move freely and are mounted securely.

15. STEERING WHEEL

Check that it has specified freeplay. Be alert for changes in steering condition, such as hard steering, excessive freeplay or strange noise.

16. SEATS

(a) Check that all front seat controls such as seat adjusters, seatback recliner, etc. operate smoothly.

(b) Check that all latches lock securely in any position.

(c) Check that the locks hold securely in any latched position.

(d) Check that the head restraints move up and down smoothly and that the locks hold securely in any latched position.

(e) For folding-down rear seat backs, check that the latches lock securely.

17. SEAT BELTS

(a) Check that the seat belt system such as buckles, retractors and anchors operate properly and smoothly.

(b) Check that the belt webbing is not cut, frayed, worn or damaged.

18. ACCELERATOR PEDAL

Check the pedal for smooth operation and uneven pedal effort or catching.

19. CLUTCH PEDAL (See page CL-3)

Check the pedal for smooth operation.
Check that the pedal has the proper freeplay.

20. BRAKE PEDAL (See page BR-6)

(a) Check the pedal for smooth operation.
(b) Check that the pedal has the proper reserve distance and freeplay.
(c) Check the brake booster function.

21. BRAKES

At a safe place, check that the brakes do not pull to one side when applied.

22. PARKING BRAKE (See page BR-8)

(a) Check that the lever has the proper travel.
(b) On a safe incline, check that vehicle is held securely with only the parking brake applied.

23. AUTOMATIC TRANSMISSION "PARK" MECHANISM

(a) Check the lock release button of the selector lever for proper and smooth operation.
(b) On a safe incline, check that vehicle is held securely with the selector lever in "P" position and all brakes released.

UNDER HOOD

24. WINDSHIELD WASHER FLUID

Check that there is sufficient fluid in the tank.

25. ENGINE COOLANT LEVEL

Check that the coolant level is between the "FULL" and "LOW" lines on the see-through reservoir.

26. RADIATOR AND HOSES

(a) Check that the front of the radiator is clean and not blocked with leaves, dirt or bugs.
(b) Check the hoses for cracks, links, rot or loose connections.

27. BATTERY ELECTROLYTE LEVEL

Check that the electrolyte level of all battery cells is between the upper and lower level lines on the case. If level is low, add distilled water only.

28. BRAKE AND CLUTCH FLUID LEVELS

(a) Check that the brake fluid level is near the upper level line on the see-through reservoir.
(b) Check that the clutch fluid level is up to the top of the narrow neck of the see-through reservoir.

29. ENGINE DRIVE BELTS

Check all drive belts for fraying, cracks, wear or oiliness.

30. ENGINE OIL LEVEL

Check the level on the dipstick with the engine turned off.

31. POWER STEERING FLUID LEVEL

Check the level on the dipstick.
The level should be in the "HOT" or "COLD" range depending on the fluid temperature.

32. AUTOMATIC TRANSMISSION FLUID LEVEL

(a) Park the vehicle on a level surface.
(b) With the engine idling and the parking brake applied, shift the selector into all positions from "P" to "L", and then shift into "P".
(c) Pull out the dipstick and wipe off the fluid with a clean rag. Re-insert the dipstick and check that the fluid level is in the "HOT" range.
(d) Perform this check with the fluid at normal driving temperature (70 – 80°C or 158 – 176°F).

NOTE: Wait about 30 minutes before checking the fluid level after extended driving at high speeds, in hot weather, in heavy traffic or with a trailer.

33. EXHAUST SYSTEM

Visually inspect for cracks, holes or loose supports.
If any change in the sound of the exhaust or smell of the exhaust fumes is noticed, have the cause located and corrected.

ENGINE MECHANICAL

	Page
TROUBLESHOOTING	EM-2
IDLE HC/CO CONCENTRATION	EM-5
COMPRESSION CHECK	EM-6
TIMING BELT	EM-7
Components	EM-7
Cautions	EM-7
Inspection and Adjustment of Valve Timing	EM-7
Removal of Timing Belt	EM-11
Inspection of Components	EM-13
Installation of Timing Belt	EM-15
CYLINDER HEAD	EM-18
Components	EM-18
Preparation for Removal	EM-18
Removal of Cylinder Head	EM-19
Disassembly of Cylinder Head	EM-22
Inspection and Cleaning of Components	EM-23
Assembly of Cylinder Head	EM-29
Inspection of Camshaft	EM-29
Replacement of Camshaft Housing Oil Seal	EM-31
Installation of Cylinder Head	EM-34
CYLINDER BLOCK	EM-38
Components	EM-38
Removal of Engine	EM-38
Disassembly of Cylinder Block	EM-42
Inspection of Cylinder Block	EM-48
Disassembly of Piston and Connecting Rod Assembly	EM-49
Inspection of Piston and Connecting Rod Assembly	EM-49
Replacement of Rod Bushing	EM-51
Boring of Cylinders	EM-52
Assembly of Piston and Connecting Rod Assembly	EM-53
Inspection and Repair of Crankshaft	EM-53
Inspection and Repair of Oil Pump Drive Shaft Components	EM-54
Replacement of Oil Seals	EM-56
Assembly of Cylinder Block	EM-58
Installation of Engine	EM-61

TROUBLESHOOTING

Problem	Possible cause	Remedy	Page
Engine overheats	Cooling system faulty	Troubleshoot cooling system	CO-2
	Incorrect ignition timing	Reset timing	IG-10
Engine will not crank or cranks slowly	Starting system faulty	Troubleshoot starting system	ST-2
Engine will not start/ Hard to start (cranks OK)	Vacuum leaks • PCV hoses • EGR valve • Intake manifold • Air intake chamber • Throttle body • ISC valve	Repair as necessary	
	Pulling in air between air flow meter and throttle body	Repair as necessary	FI-58, 63
	Ignition problems • Ignition coil • Igniter • Distributor	Perform spark test	IG-4
	Ignition wiring disconnected or broken	Inspect wiring	
	No fuel supply to injector • No fuel in tank • Fuel pump not working • Fuel filter clogged • Fuel line clogged or leaking	Troubleshoot EFI system	FI-8
	EFI system problems	Repair as necessary	
	ISC system problem	Check ISC system	FI-60
	Spark plugs faulty	Inspect plugs	IG-5
	Low compression	Check compression	EM-6
Rough idle, stalls or misses	Vacuum leaks • PCV hoses • EGR valve • Intake manifold • Air intake chamber • Throttle body • ISC valve	Repair as necessary	
	Pulling in air between air flow meter and throttle body		FI-58, 63
	Incorrect idle speed	Check ISC system	FI-60
	Incorrect ignition timing	Reset timing	IG-10
	Ignition problems • Ignition coil • Igniter • Distributor	Perform spark test Inspect coil Inspect distributor	IG-4
	Ignition wiring faulty	Inspect wiring	
	EFI system problems	Repair as necessary	
	Spark plugs faulty	Inspect plugs	
	Engine overheats	Check cooling system	CO-2
	Low compression	Check compression	EM-6

TROUBLESHOOTING (Cont'd)

Problem	Possible cause	Remedy	Page
Engine hesitates/ Poor acceleration	Vacuum leaks • PCV hoses • EGR valve • Intake manifold • Air intake chamber • Throttle body • ISC valve	Repair as necessary	
	Pulling in air between air flow meter and throttle body	Repair as necessary	FI-58, 63
	Incorrect ignition timing	Reset timing	IG-10
	Emission control system problem (cold engine) • EGR system always on	Check EGR system	
	Ignition wiring faulty	Inspect wiring	
	Fuel system clogged	Check fuel system	FI-44
	Air cleaner clogged	Check air cleaner	
	EFI system problems	Repair as necessary	
	Spark plugs faulty	Inspect plugs	IG-5
	Engine overheats	Check cooling system	CO-2
	Low compression	Check compression	EM-6
Engine diesels (runs after ignition switch is turned off)	EFI system problems	Repair as necessary	
Muffler explosion (after fire) on deceleration only	Deceleration fuel cut system always off	Check EFI (fuel cut) system	FI-79
Muffler explosion (after fire) all the time	Air cleaner clogged	Check air cleaner	
	EFI system problem	Repair as necessary	
	Incorrect ignition timing	Reset timing	IG-10
Engine backfires	Vacuum leak • PCV hoses • EGR valve • Intake manifold • Air intake chamber • Throttle body • ISC valve	Check hoses and repair as necessary	
	Pulling in air between air flow meter and throttle body	Repair as necessary	FI-58, 63
	EFI system problem	Repair as necessary	
	Insufficient fuel flow	Troubleshoot fuel system	
	Incorrect ignition timing	Reset timing	IG-10
	Carbon deposits in combustion chambers	Inspect cylinder head	EM-18
Excessive oil consumption	Oil leak	Repair as necessary	LU-4
	PCV line clogged	Check PCV system	EC-4
	Piston rings worn or damaged	Check rings	EM-38

TROUBLESHOOTING (Cont'd)

Problem	Possible cause	Remedy	Page
Excessive oil consumption	Valve stem and guide worn	Check valves	EM-18
	Valve stem seal worn	Check seals	EM-18
Poor gasoline mileage	Fuel leak	Repair as necessary	
	Air cleaner clogged	Check air cleaner	
	Incorrect ignition timing	Reset timing	IG-10
	EFI system problems • Injector faulty • Deceleration fuel cut system faulty	Repair as necessary	
	Idle speed too high	Check ISC system	FI-60
	Spark plugs faulty	Inspect plugs	IG-5
	EGR system always on	Check EGR system	
	Low compression	Check compression	EM-6
	Tires improperly inflated	Inflate tires to proper pressure	
	Clutch slips	Troubleshoot clutch	
	Brakes drag	Troubleshoot brakes	
Unpleasant odor	Incorrect idle speed	Check ISC system	FI-60
	Incorrect ignition timing	Reset timing	IG-10
	Vacuum leaks • PCV hoses • EGR valve • Intake manifold • Air intake chamber • Throttle body	Repair as necessary	
	EFI system problems	Repair as necessary	

IDLE HC/CO CONCENTRATION

NOTE: This check method is used only to determine whether or not the idle HC/CO complies with regulations.

PRECHECK

INITIAL CONDITIONS

(a) Air cleaner installed

(b) Normal engine operating temperature

(c) All pipes and hoses of air intake system connected

(d) All accessories switched off

(e) All vacuum lines properly connected

NOTE: All vacuum hoses for EGR systems, etc. should be properly connected.

(f) EFI system wiring connectors fully plugged

(g) Ignition timing set correctly

(h) Transmission in N range

(i) Tachometer and HC/CO meter calibrated and at hand

MEASUREMENT

1. **RACE ENGINE AT 2,500 RPM FOR ABOUT 2 MINUTES**

2. **INSERT TESTING PROBE OF HC/CO METER INTO TAILPIPE AT LEAST 40 cm (1.3 ft)**

3. **MEASURE HC/CO CONCENTRATION AT IDLE**

   Wait at least one minute before measuring to allow the concentration to stabilize.

   Complete the measuring within three minutes.

   If the HC/CO concentration does not conform to your regulations, see the table below for possible causes.

TROUBLESHOOTING

HC	CO	Symptoms	Causes
High	Normal	Rough idle	1. Faulty ignition: • Incorrect timing • Fouled, shorted or improperly gapped plugs • Open or crossed ignition wires • Cracked distributor cap 2. Faulty EGR system • EGR valve 3. Leaky exhaust valves 4. Leaky cylinder
High	Low	Rough idle Fluctuating HC reading	1. Vacuum leak: • Vacuum hose • Intake manifold 2. Lean mixture causing misfire
High	High	Rough idle Black smoke from exhaust	1. Restricted air filter 2. Faulty EFI system: • Faulty pressure regulator • Clogged fuel return line • Faulty air flow meter • Defective water temp. sensor • Defective air temp. sensor • Faulty ECU • Faulty injector • Faulty cold start injector • Faulty throttle position sensor

COMPRESSION CHECK

NOTE: If there is lack of power, excessive oil consumption or poor fuel mileage, measure the cylinder compression pressure.

1. **WARM UP ENGINE**

2. **REMOVE SPARK PLUGS**

3. **DISCONNECT HIGH-TENSION CORD FROM DISTRIBUTOR**

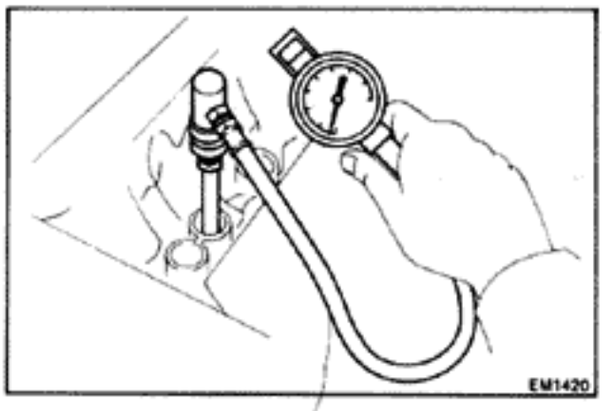

4. **MEASURE CYLINDER COMPRESSION PRESSURE**

   (a) Insert a compression gauge into the spark plug hole.

   (b) Fully open the throttle valve.

   (c) While cranking the engine with the starter motor, measure the compression pressure.

   NOTE: Always use a fully charged battery to obtain engine revolution of more than 250 rpm.

   (d) Repeat steps (a) through (c) for each cylinder.

   Compression pressure:
   11.5 kg/cm² (164 psi, 1,128 kPa)
   Minimum pressure:
   9.0 kg/cm² (128 psi, 883 kPa)
   Difference between each cylinder:
   Less than 1.0 kg/cm² (14 psi, 98 kPa)

   (e) If cylinder compression in one or more cylinders is low, pour a small amount of engine oil into the cylinder through the spark plug hole and repeat steps (a) through (c) for the cylinder with low compression.

   - If adding oil helps the compression, changes are that the piston rings and/or cylinder bore are worn or damaged.
   - If pressure stays low, a valve may be sticking or seatied improperly, or there may be leakage past the gasket.

TIMING BELT

COMPONENTS

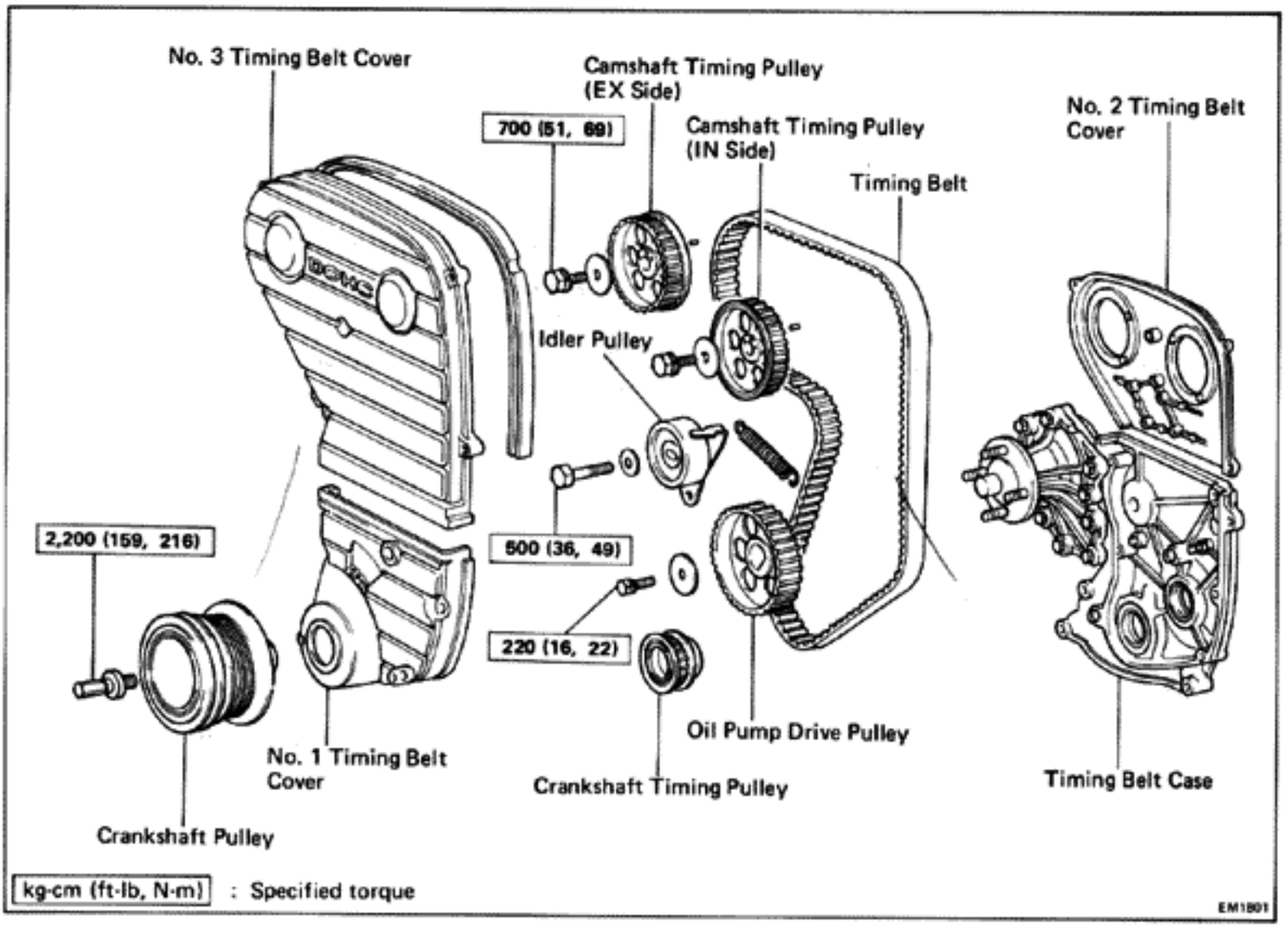

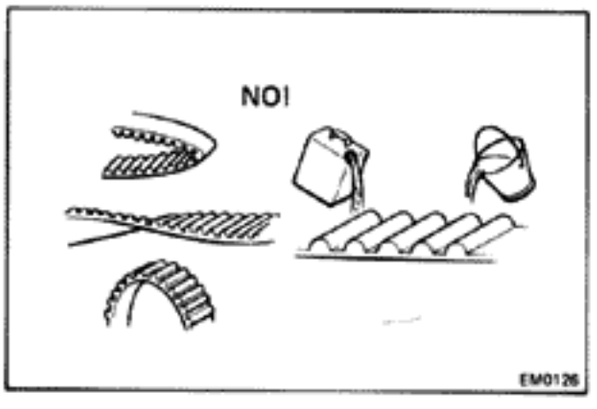

CAUTIONS

1. **Do not bend, twist or turn the belt inside out.**
2. **Do not allow the belt to come into contact with oil, water or steam.**

INSPECTION AND ADJUSTMENT OF VALVE TIMING

1. **DISCONNECT CABLE FROM NEGATIVE TERMINAL OF BATTERY**
2. **REMOVE NO.2 FAN SHROUD**
3. **REMOVE AIR INTAKE CONNECTOR**

4. **REMOVE NO. 3 TIMING BELT COVER**

5. **REMOVE OIL FILLER CAP AND CYLINDER HEAD COVER OF EXHAUST SIDE**

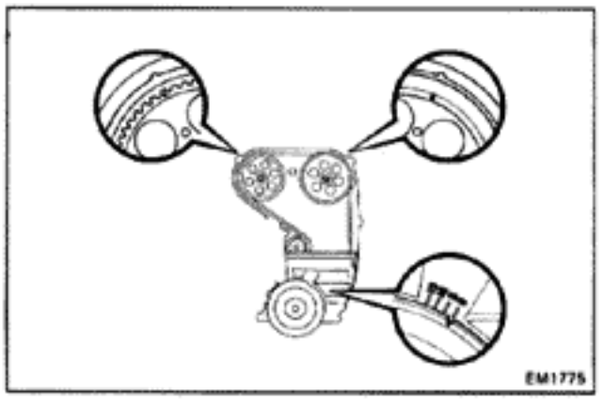

6. **CHECK CAMSHAFT TIMING PULLEY MARKS**

(a) Turn the crankshaft clockwise and set the No. 1 cylinder to TDC/compression.

(b) Check that the matchmarks of the camshaft timing pulleys are aligned with those of the No. 2 timing belt cover.

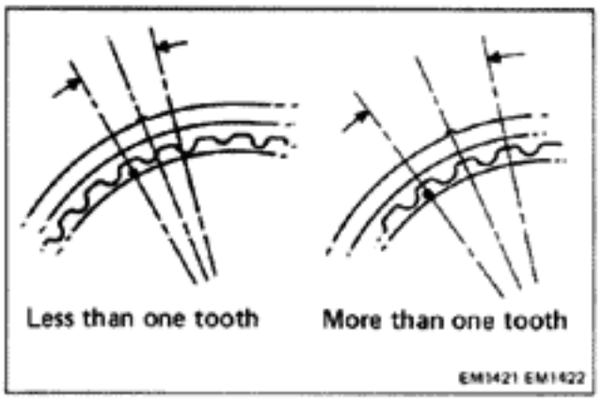

- If there is more than timing pulley one tooth between the matchmarks, realign the matchmarks in accordance with step 7.
- If the matchmarks are aligned or the difference is less than one timing pulley,tooth proceed to step 8.

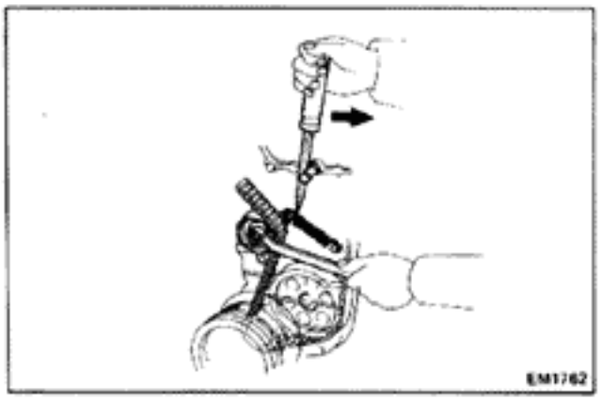

7. **ADJUSTMENT OF CAMSHAFT TIMING PULLEY MARKS**

(a) Loosen the idler pulley set bolt a little and shift the idler pulley to the alternator side with a screwdriver and wrench.

(b) Finger tighten the idler pulley set bolt.

(c) Remove the timing belt from the camshaft timing pulleys.

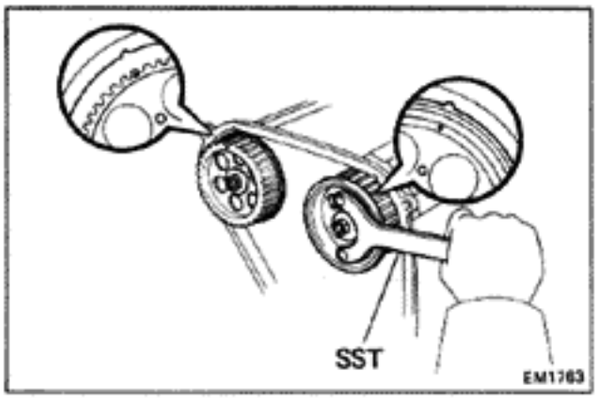

(d) Using SST, rotate the camshaft timing pulley with the camshaft and align the matchmarks.

SST 09278-54012

(e) Install the timing belt while the engine is cold.

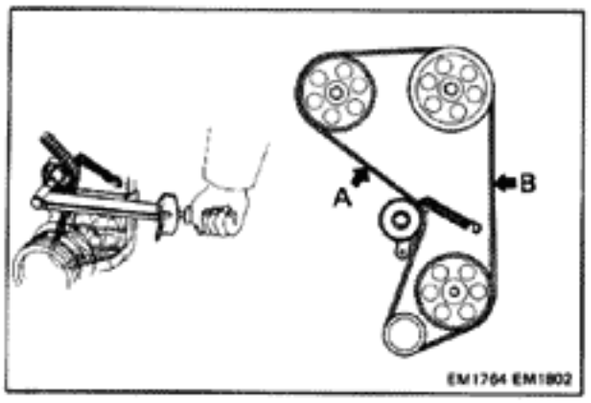

(f) Loosen the idler pulley set bolt stretch the timing belt.

(g) Tighten the idler pulley set bolt.

Torque: 500 kg-cm (36 ft-lb, 49 N·m)

NOTE: Make sure that the timing belt tension at A is equal to that at B. If not, retighten the idler pulley set bolt.

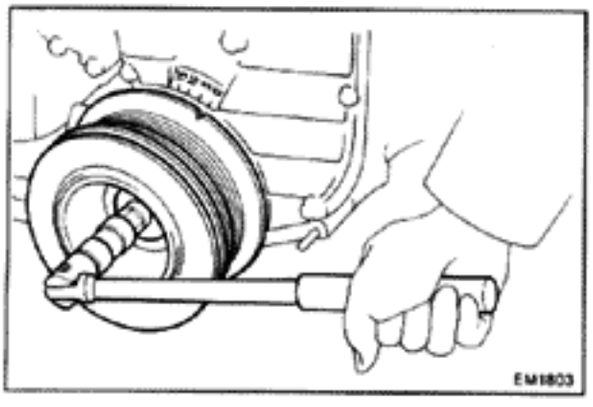

(h) Turn the crankshaft clockwise two times and set the No. 1 cylinder to TDC/compression.

NOTE: Recheck the timing belt tension.

(i) Recheck the camshaft timing pulley marks.

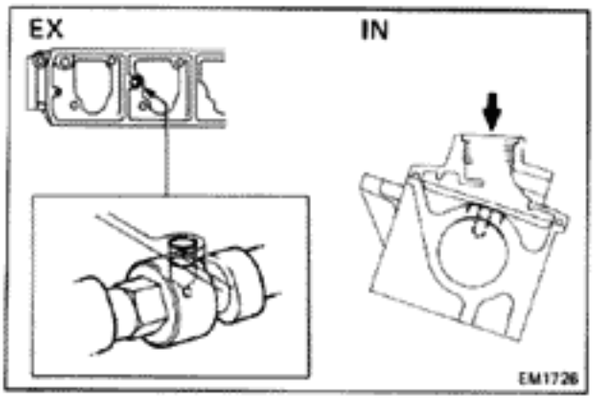

8. CHECK MATCH HOLE OF CAMSHAFT

(a) Clean the camshaft match holes with compressed air.

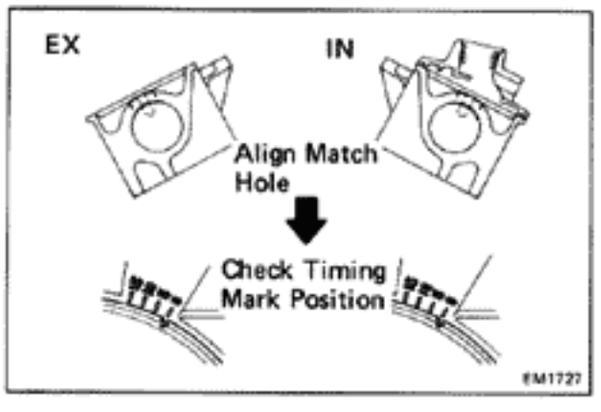

(b) Align the match hole of the camshaft with that of the camshaft housing by turning the crankshaft pulley.

(c) After alignment, make a note of the crankshaft pulley angle on the No. 1 timing belt cover.

NOTE: Match hole alignment should be done separately for the IN and EX sides.

If the crankshaft pulley angle is within TDC ± 5°, it is correct.

If it exceeds TDC ± 5°, proceed to step 9.

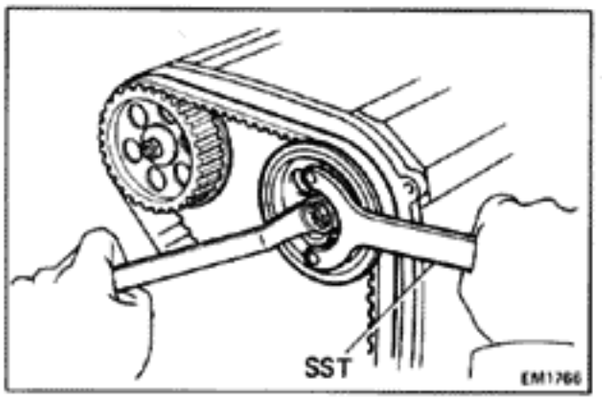

9. ADJUSTMENT OF CAMSHAFT MATCH HOLES

(a) Using SST to hold the camshaft timing pulley, remove the pulley set bolt.

SST 09278-54012

CAUTION: Do not make use of the timing belt tension when loosening the bolt.

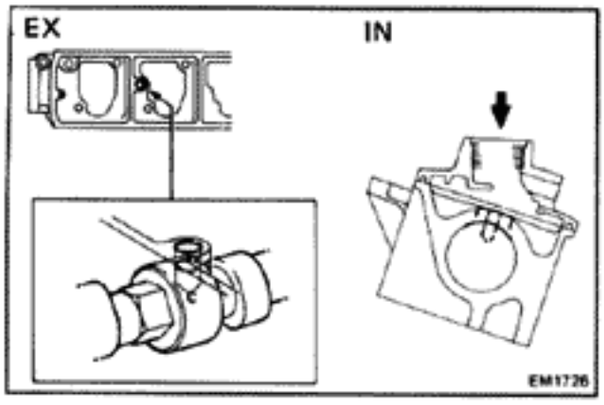

(b) Make sure that the match hole of camshaft housing is aligned with that of the camshaft.

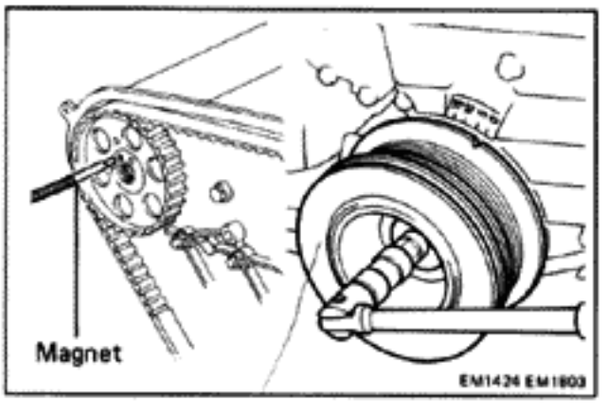

(c) Using a magnet, remove the match pin from the pin hole of the camshaft timing pulley.

(d) Set the No. 1 cylinder to TDC/compression.

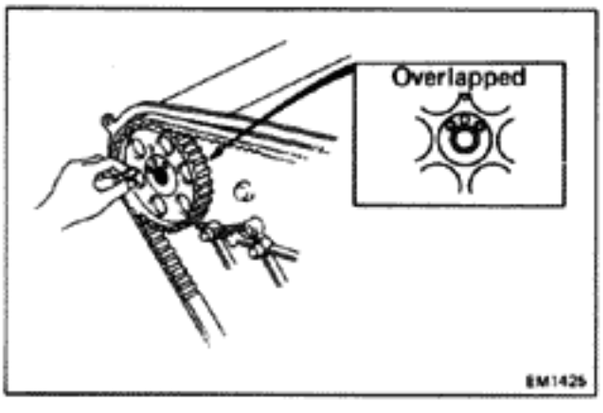

(e) There are three pin holes on the camshaft and timing pulley.
Select one overlapped hole and insert the match pin into it.

NOTE:

- If there is no overlapping hole, find one that is nearly overlapped and rotate the crankshaft slightly to overlap it, and then insert the pin.
- The crankshaft pulley angle can be adjust approximately 3° by changing the pin hole to the next one.

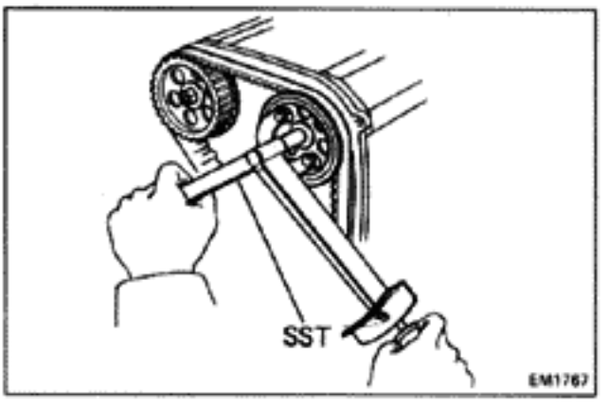

(f) Using SST to hold the camshaft timing pulley, install the pulley set bolt.

SST 09278-54012

Torque: 700 kg-cm (51 ft-lb, 69 N·m)

CAUTION: Do not make use of the timing belt tension when tightening the bolt.

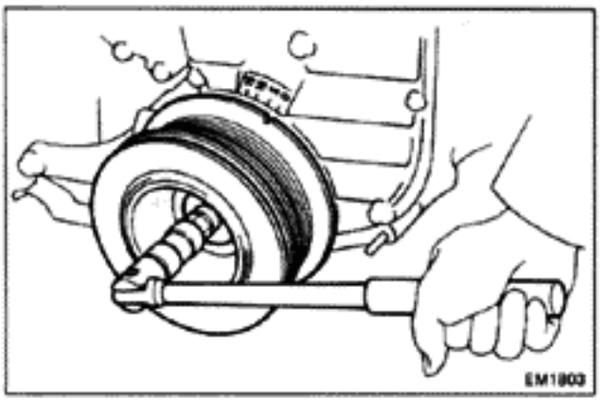

(g) Turn the crankshaft clockwise two times and set the No. 1 cylinder to TDC/compression.

(h) Recheck the crankshaft pulley angle on the No. 1 timing belt cover after alignment of the camshaft match hole.

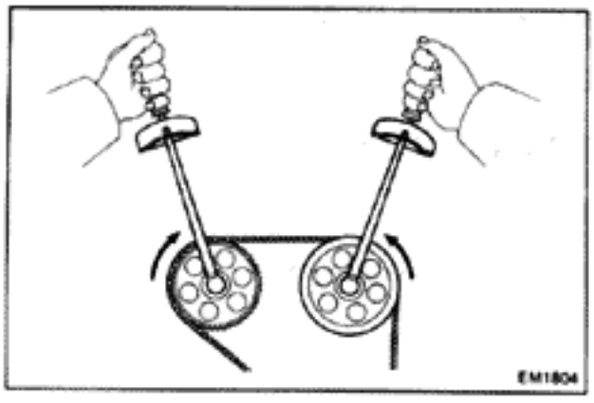

10. CHECK TIMING BELT TENSION

(a) Turn both the intake and exhaust camshaft pulleys inward at the same time to slacken the timing belt at position A.

Turning torque: 200 kg-cm (14 ft-lb, 20 N·m)

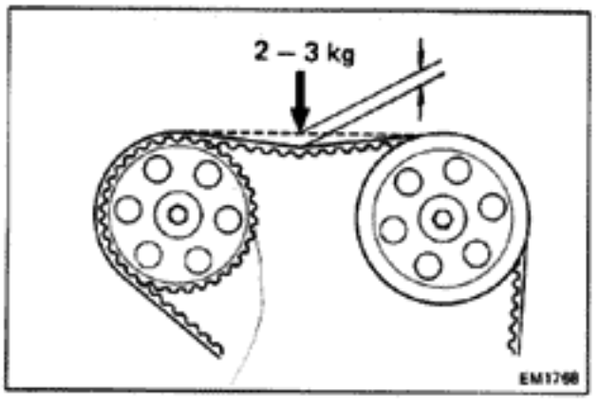

(b) Measure the timing belt tension as shown.

Belt deflection at 2 — 3 kg (4.4 — 6.6 lb, 20 — 29 N):

Cold Used belt	**5 — 7 mm (0.20 — 0.28 in.)**
New belt	**4 — 6 mm (0.16 — 0.24 in.)**
Hot (Reference)	**3 — 5 mm (0.12 — 0.20 in.)**

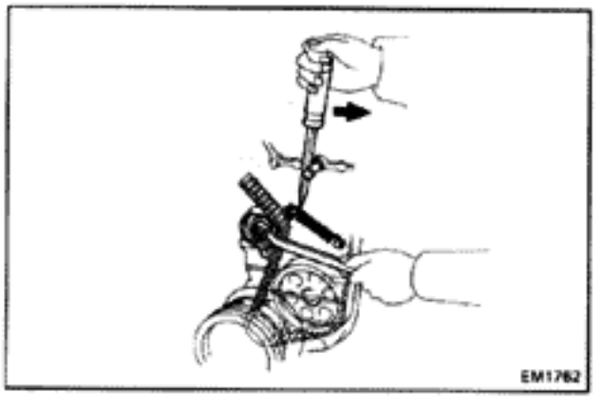

(c) If the measurement is not within specification, adjust with the idler pulley.

11. INSTALL NO. 3 TIMING BELT COVER

12. INSTALL OIL FILLER CAP AND CYLINDER HEAD COVER OF EXHAUST SIDE

13. INSTALL AIR INTAKE CONNECTOR

14. INSTALL NO.2 FAN SHROUD

15. CONNECT CABLE TO NEGATIVE TERMINAL OF BATTERY

REMOVAL OF TIMING BELT

(See page EM-7)

1. DISCONNECT CABLE FROM NEGATIVE TERMINAL OF BATTERY

2. DRAIN COOLANT

3. REMOVE AIR CLEANER CASE

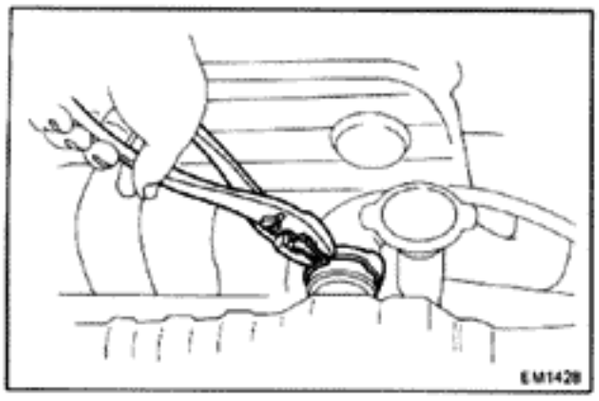

4. REMOVE RADIATOR UPPER HOSE

5. LOOSEN DRIVE BELTS

6. REMOVE FLUID COUPLING WITH FAN SHROUD

7. REMOVE DRIVE BELTS

8. REMOVE AIR INTAKE CONNECTOR

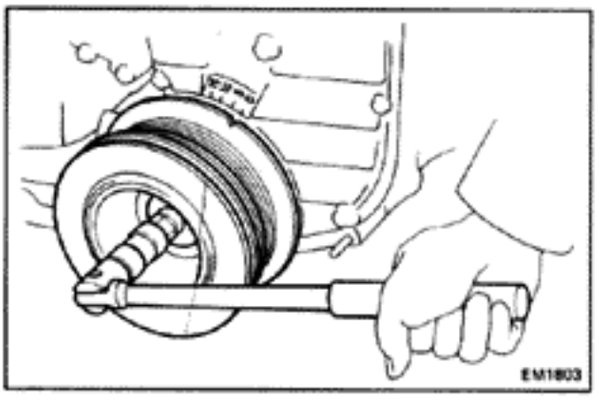

9. SET NO. 1 CYLINDER TO TDC/COMPRESSION

10. REMOVE NO. 3 TIMING BELT COVER

Remove the five bolts and remove the cover and gasket.

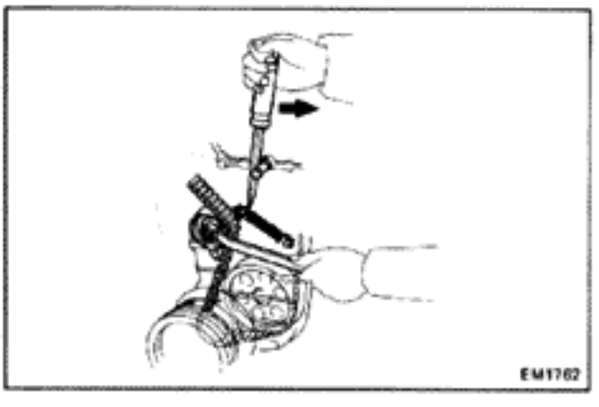

11. RELIEVE TIMING BELT TENSION

(a) Loosen the idler pulley set bolt a little and shift the idler pulley to the alternator side with a screwdriver and wrench.

(b) Finger tighten the set bolt and then relieve the timing belt tension.

12. REMOVE TIMING BELT FROM CAMSHAFT TIMING PULLEYS

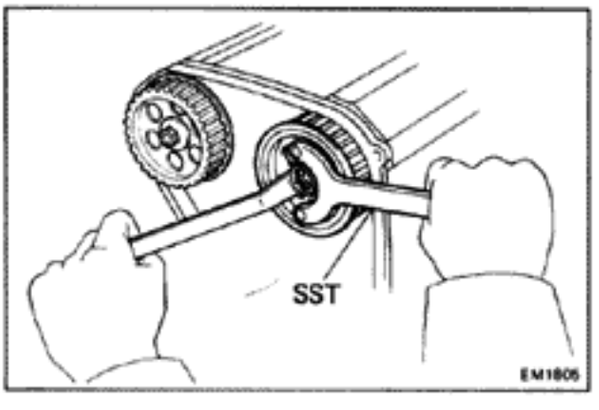

13. REMOVE CAMSHAFT TIMING PULLEYS

Using SST to hold the pulley, remove the pulley set bolt, timing pulley, and match pin.

SST 09278-54012

CAUTION: Do not make use of the timing belt tension when removing and installing the pulley set bolts.

NOTE: The exhaust and intake sides each use a different type of pulley — they are not interchangeable.

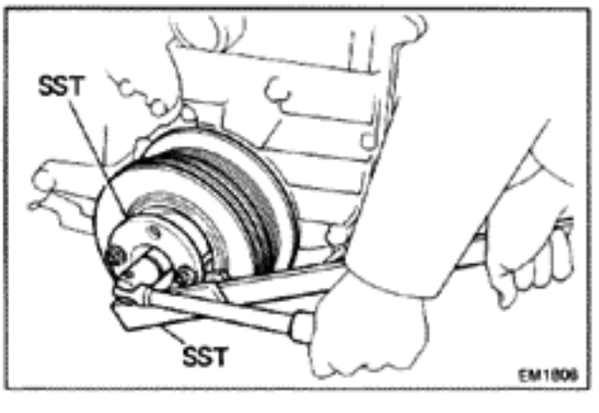

14. REMOVE CRANKSHAFT PULLEY

(a) Using SST to hold the crankshaft pulley, loosen the pulley bolt.

SST 09213-70010 and 09330-00021

(b) Remove the SST and pulley bolt.

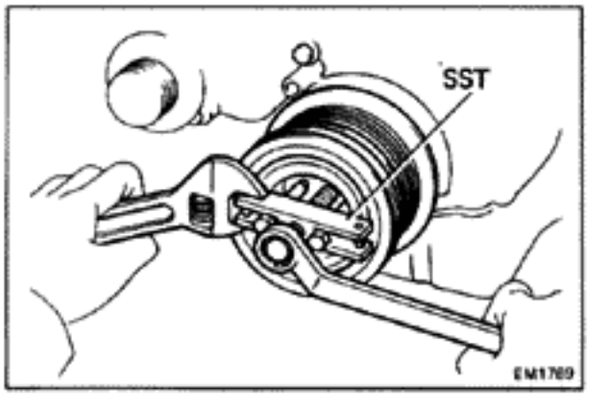

(c) Using SST, remove the pulley.

SST 09213-31021

15. REMOVE BRACKET OF COOLER COMPRESSOR

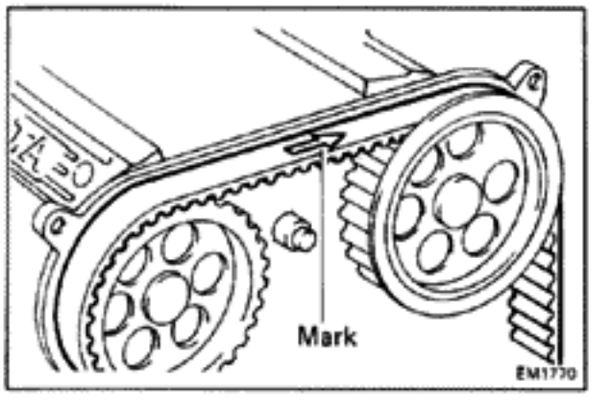

16. REMOVE NO. 1 TIMING BELT COVER AND TIMING BELT

(a) Using chalk, place a rotation direction mark on the timing belt.

NOTE: Install the timing belt in the same direction when reassembling.

(b) Remove the No. 1 timing belt cover.

(c) Remove the timing belt.

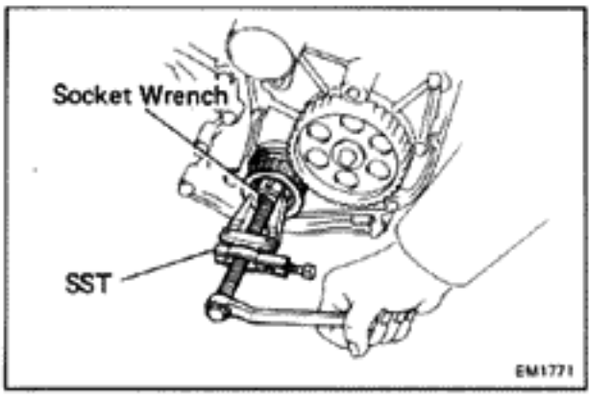

17. REMOVE IDLER PULLEY AND TENSION SPRING

18. REMOVE CRANKSHAFT TIMING PULLEY

Using SST and socket wrench, remove the crankshaft timing pulley.

SST 09308-10010

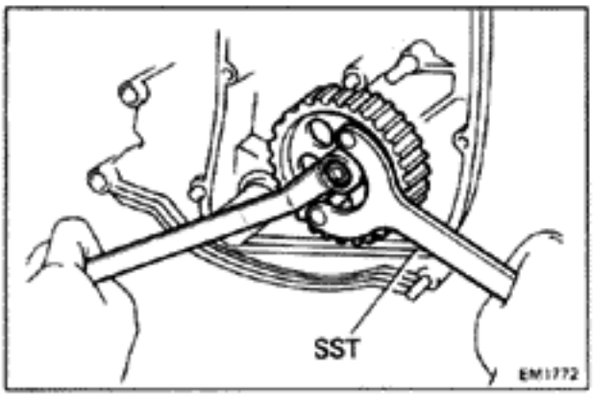

19. REMOVE OIL PUMP DRIVE SHAFT PULLEY

Using SST to hold the pulley, remove the set bolt and pulley.

SST 09278-54012

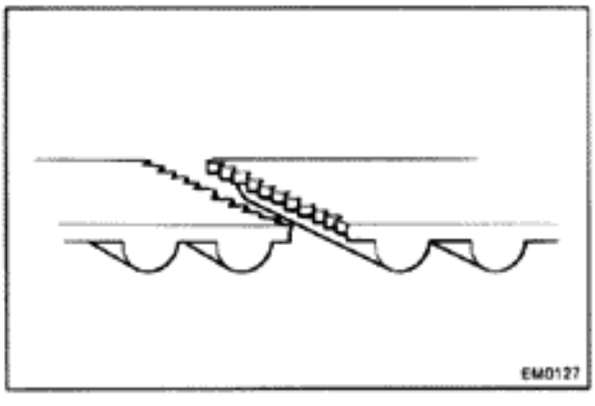

INSPECTION OF COMPONENTS

1. INSPECT TIMING BELT

(a) Premature parting

- Check for proper installation.
- Check the timing belt cover gasket for damage, and check the installation.

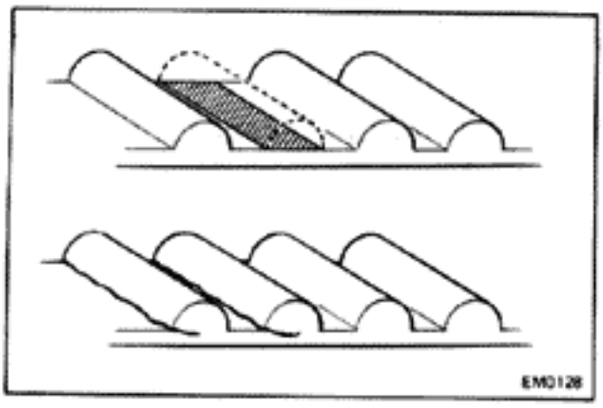

(b) If the belt teeth are cracked or damaged, check to see if the camshaft is locked.

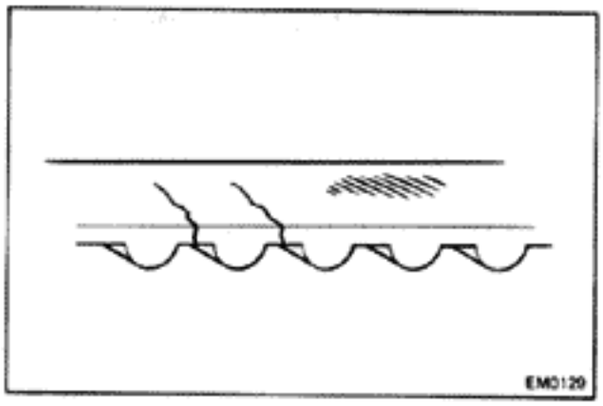

(c) If there is noticeable wear or cracks on the belt face, check to see if there are nicks on one side of the idler pulley lock.

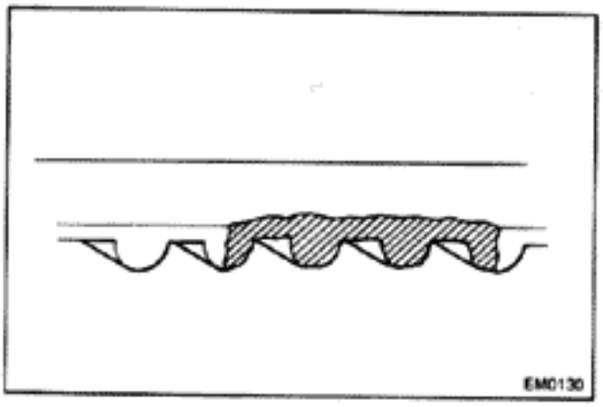

(d) If there is wear or damaged on only one side of the belt, check the belt guide and the alignment of each pulley.

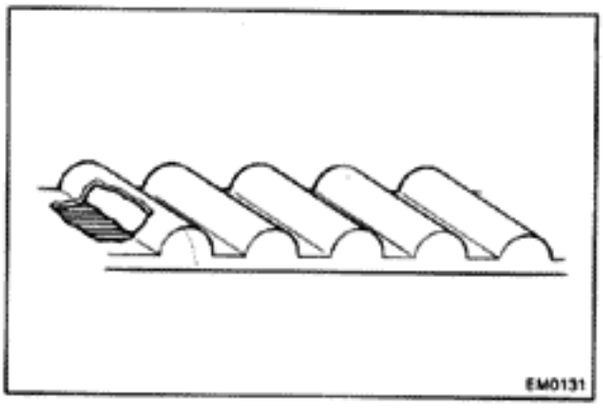

(e) If there is noticeable wear on the belt teeth, check the timing belt cover gasket for damage and check for correct gasket installation. Check for foreign material on the pulley teeth.

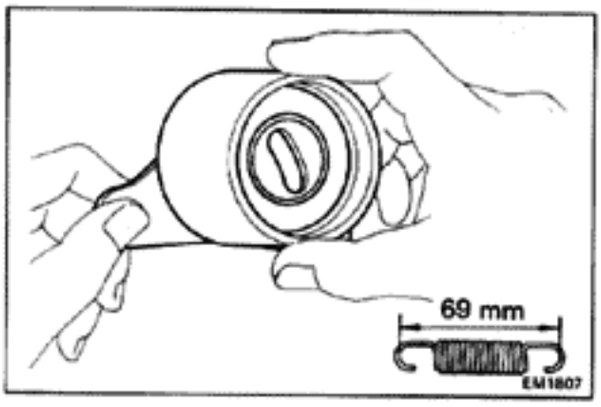

2. INSPECT IDLER PULLEY AND TENSION SPRING

(a) Check the turning smoothness of the timing belt idler pulley.

(b) Check the free length of the tension spring.
If not as specified, use a new one.

Free length: 69 mm (2.72 in.)

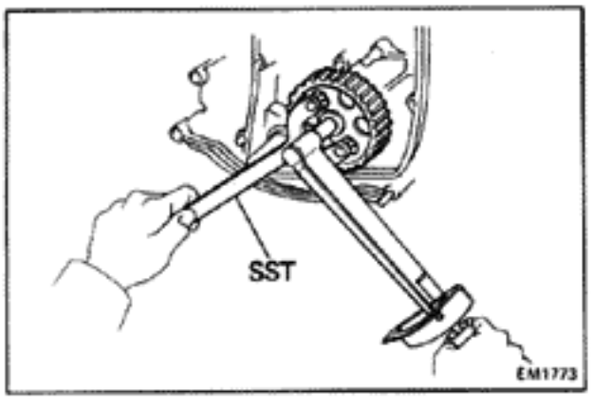

INSTALLATION OF TIMING BELT

(See page EM-7)

1. INSTALL OIL PUMP DRIVE PULLEY

Using SST to hold the pulley, install and torque the pulley bolt.

SST 09278-54012

Torque: 220 kg-cm (16 ft-lb, 22 N·m)

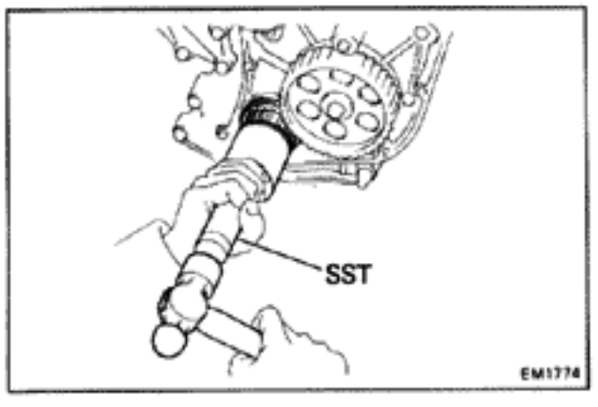

2. INSTALL CRANKSHAFT TIMING PULLEY

Using SST and hammer, drive in the pulley.

SST 09214-60010

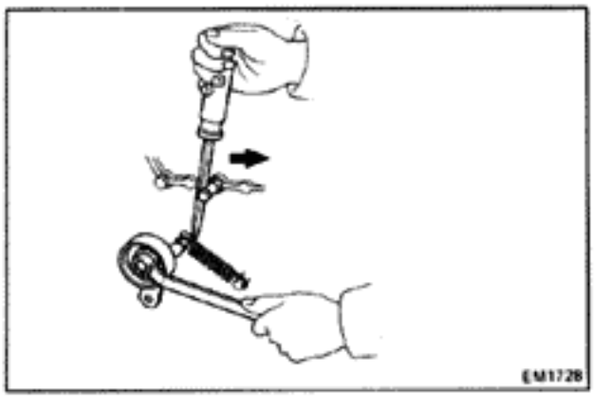

3. TEMPORARILY INSTALL IDLER PULLEY AND TENSION SPRING

Push the idler pulley toward the alternator side as far as it will go and temporarily tighten it.

4. TEMPORARILY INSTALL TIMING BELT ON CRANKSHAFT TIMING PULLEY

(a) Check the rotation direction mark placed on the timing belt during disassembly.

(b) Install the timing belt on the crankshaft timing pulley.

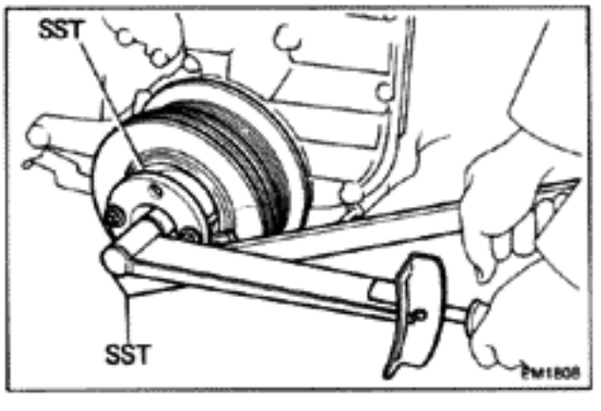

5. INSTALL NO. 1 TIMING BELT COVER

6. INSTALL BRACKET OF COOLER COMPRESSOR

7. INSTALL CRANKSHAFT PULLEY

(a) Install the crankshaft pulley and pulley bolt.

(b) Using SST to hold the crankshaft pulley, torque the pulley bolt.

SST 09213-70010 and 09330-00021

Torque: 2,200 kg-cm (159 ft-lb, 216 N ·m)

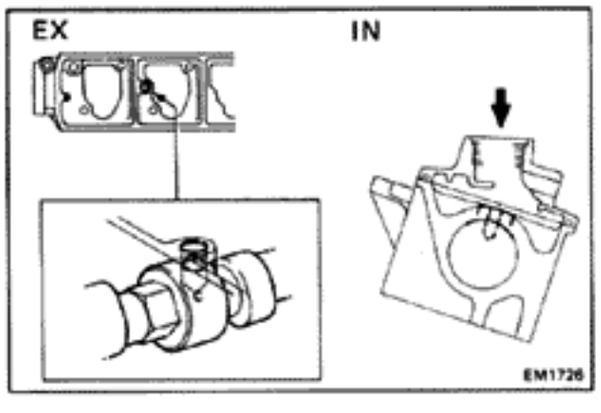

8. REMOVE OIL FILLER CAP AND CYLINDER HEAD COVER OF EXHAUST SIDE

9. INSTALL CAMSHAFT TIMING PULLEY AND TIMING BELT

(a) Make sure that the match hole on the No. 2 journal of the camshaft housing is aligned with that of the camshaft.

If not aligned, temporarily install the camshaft timing pulley and insert the match pin into the pin hole.

Then, align the match holes by turning the camshaft timing pulley.

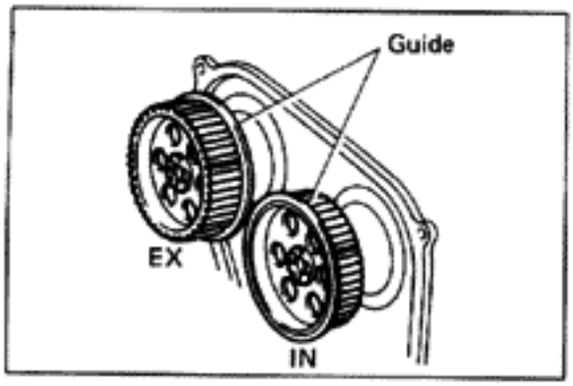

(b) Install the camshaft timing pulleys with the guides facing the directions indicated below.

EX side ..... With the pulley guide facing the No. 2 timing belt cover side

IN side ..... With the pulley guide facing the front side

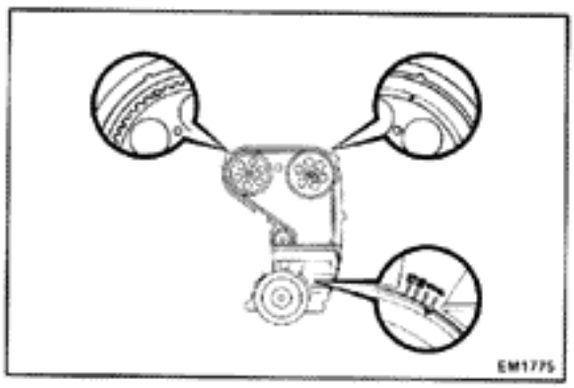

(c) Align the matchmarks of the No. 2 timing belt cover with those of the camshaft timing pulleys and of the crankshaft pulley.

NOTE: Make sure that the No. 1 cylinder is set to TDC/compression.

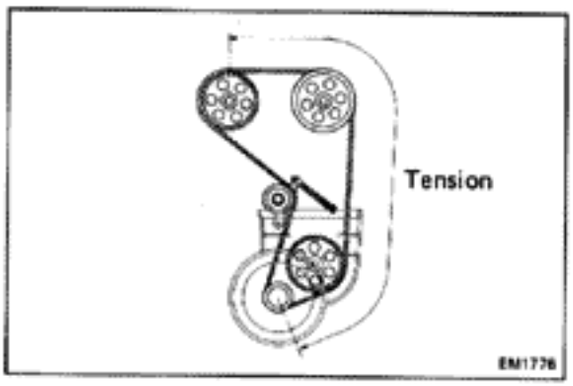

(d) Install the timing belt with the belt having proper tension between the crankshaft timing pulley and the camshaft timing pulley on the exhaust side.

NOTE: Install the timing belt while the engine is cold.

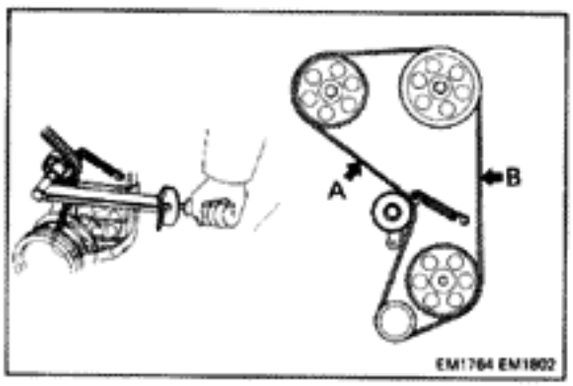

(e) Loosen the idler pulley set bolt and stretch the timing belt. Torque the idler pulley set bolt.

Torque: 500 kg-cm (36 ft-lb, 49 N·m)

NOTE: Make sure that the timing belt tension at A is equal to that at B.

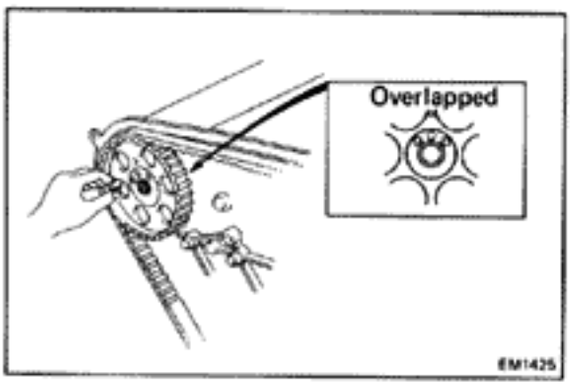

(f) There are three pin holes on the camshaft and timing pulleys.
Select one overlapped hole and insert the pin into it.

NOTE:

- If there is no overlapping hole, find one that is nearly overlapped and rotate the crankshaft slightly to overlap it and insert the pin.
- The crankshaft pulley angle can be adjusted approximately 3° by changing the pin hole to the next one.

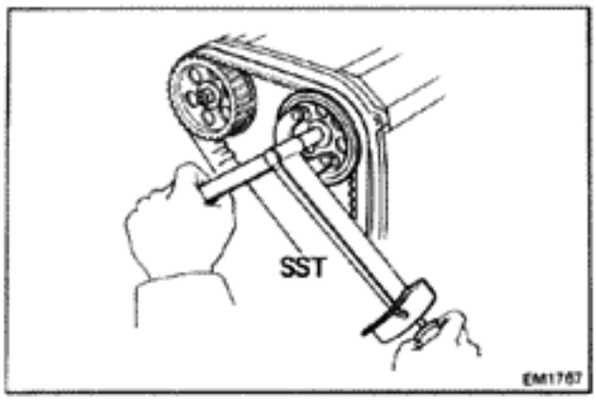

(g) Using SST to hold the pulley, install the bolt.

SST 09278-54012

Torque: 700 kg-cm (51 ft-lb, 69 N·m)

CAUTION: Do not make use of the timing belt tension when tightening the bolt.

(h) Loosen the idler pulley set bolt.

(i) Turn the crankshaft clockwise two times.

(j) Retighten the idler pulley set bolt.

10. CHECK TIMING MARKS

(a) Rotate the crankshaft two times clockwise.

(b) Check the timing marks. (Refer to the section of INSPECTION AND ADJUSTMENT OF VALVE TIMING —See page EM-7)

11. CHECK TIMING BELT TENSION
(See step 10 on page EM-11)

12. INSTALL CYLINDER HEAD COVER AND GASKET ON EXHAUST SIDE

13. INSTALL OIL FILLER CAP

14. INSTALL NO. 3 TIMING BELT COVER AND GASKET

15. INSTALL FLUID COUPLING WITH FAN SHROUD

16. INSTALL RADIATOR UPPER HOSE

17. INSTALL DRIVE BELTS
(See page MA-4)

18. INSTALL AIR CLEANER CASE WITH AIR INTAKE CONNECTOR

19. FILL WITH COOLANT

20. CONNECT CABLE TO NEGATIVE TERMINAL OF BATTERY

CYLINDER HEAD

COMPONENTS

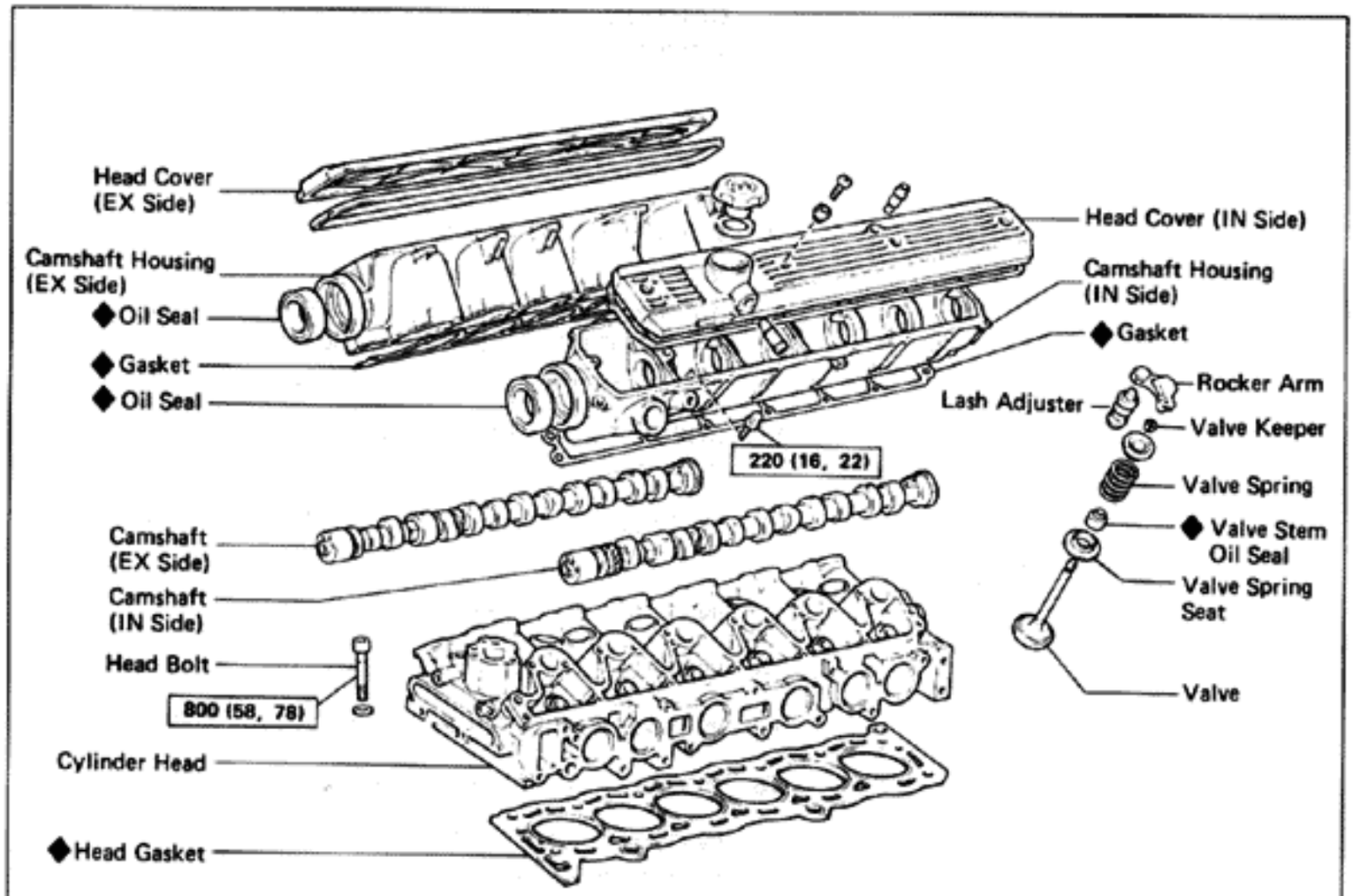

kg-cm (ft-lb, N-m) : Specified torque

◆ Non-reusable part

PREPARATION FOR REMOVAL

1. DISCONNECT CABLE FROM NEGATIVE TERMINAL OF BATTERY
2. DRAIN COOLANT
3. DISCONNECT EXHAUST PIPE FROM EXHAUST MANIFOLD

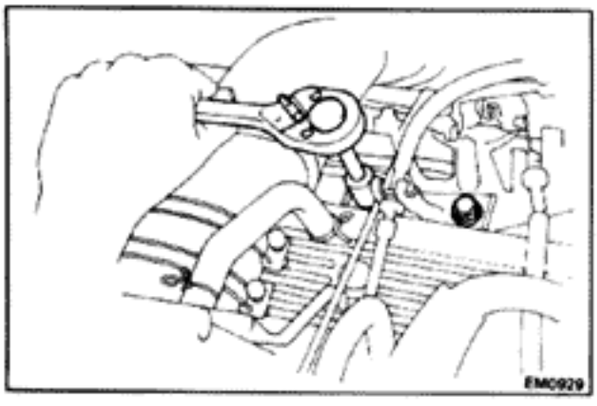

4. REMOVE THROTTLE CABLE BRACKET FROM CYLINDER HEAD COVER (for A/T)
5. REMOVE ACCELERATOR AND ACTUATOR CABLE BRACKET FROM CYLINDER HEAD COVER

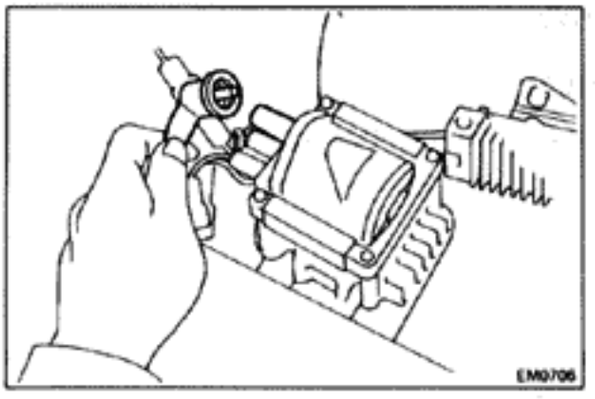

6. DISCONNECT FOLLOWING WIRES AND CABLES:

(a) Ground strap from the cylinder head
(b) Oxygen sensor wire
(c) High-tension cord from the ignition coil
(d) Distributor connector
(e) Temp. switch wire (for A/T)
(f) Solenoid resistor wire connector
(g) Knock sensor wire connector

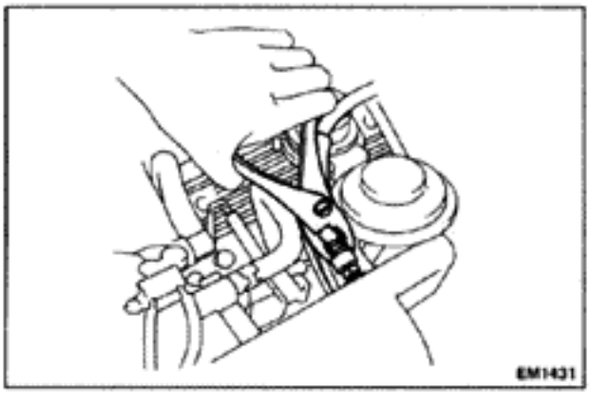

7. DISCONNECT FOLLOWING HOSES:

(a) Brake booster vacuum hose
(b) Actuator vacuum hose (with cruise control system)
(c) Fuel hose from the intake manifold
(d) EGR valve vacuum hose

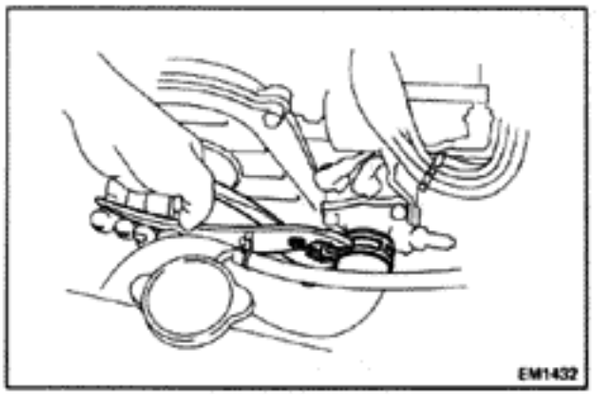

8. DISCONNECT RADIATOR UPPER HOSE FROM THERMOSTAT HOUSING

9. DISCONNECT TWO HEATER HOSES

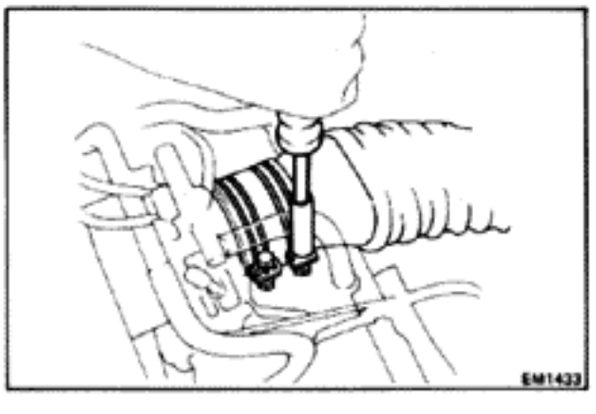

REMOVAL OF CYLINDER HEAD

1. REMOVE AIR INTAKE CONNECTOR

(a) Disconnect the No. 1 air hose from the air intake connector.
(b) Remove the two clamp bolts.
(c) Loosen the throttle body hose clamp and remove the air intake connector and the connector pipe.

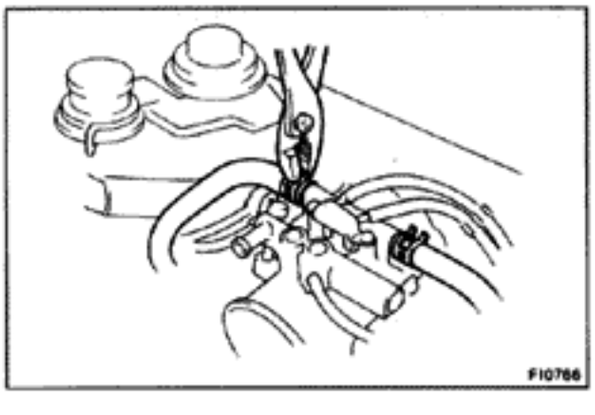

2. DISCONNECT FOLLOWING HOSES:

(a) No. 1 water by-pass hose from ISC valve.
(b) No. 2 water by-pass hose from throttle body.
(c) Two PCV hoses from the cylinder head cover.
(d) Fuel hose from the fuel hose support.
(e) Label and disconnect the emission control hoses from the throttle body and air intake chamber to allow removal of the cylinder head.

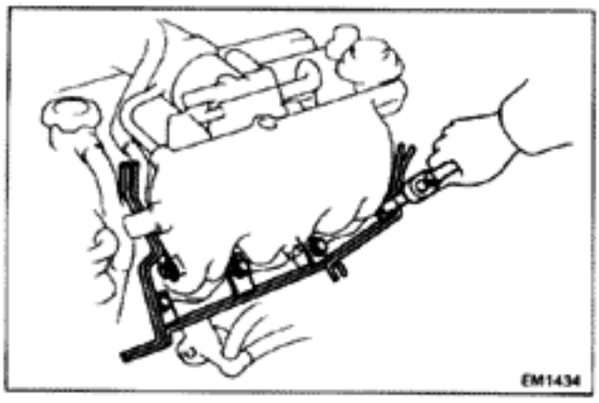

3. REMOVE AIR INTAKE CHAMBER STAY

4. REMOVE VACUUM PIPE SUBASSEMBLY

Remove the bolts and remove the vacuum pipe and ground strap.

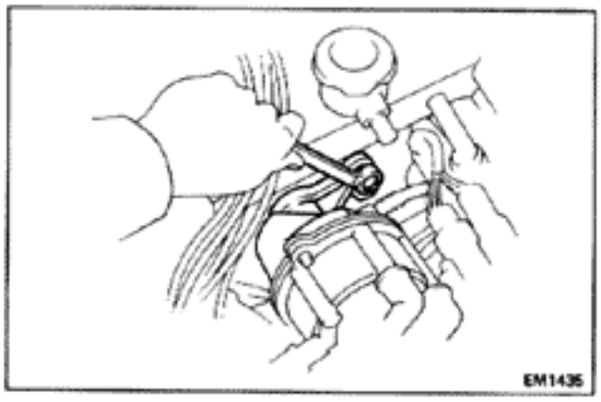

5. REMOVE DISTRIBUTOR FROM CYLINDER HEAD

(a) Remove the high-tension cord clip bolt, leaving the wires attached to the clips.

(b) Disconnect the high tension cord by pulling on the plug boot.

(c) Remove the distributor holding bolt.

(d) Remove the distributor from the cylinder head with the cap and wires.

6. REMOVE SPARK PLUGS

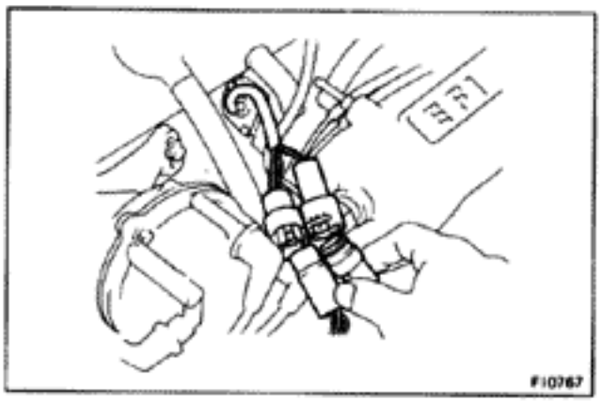

7. DISCONNECT FOLLOWING WIRES:

(a) Cold start injector wire

(b) Water temp. sensor wire

(c) Start injection time switch wire

(d) Water temp. sending unit wire

(e) Throttle position sensor wire connector

(f) ISC valve wire connectors

8. DISCONNECT COLD START INJECTOR FUEL HOSE FROM DELIVERY PIPE

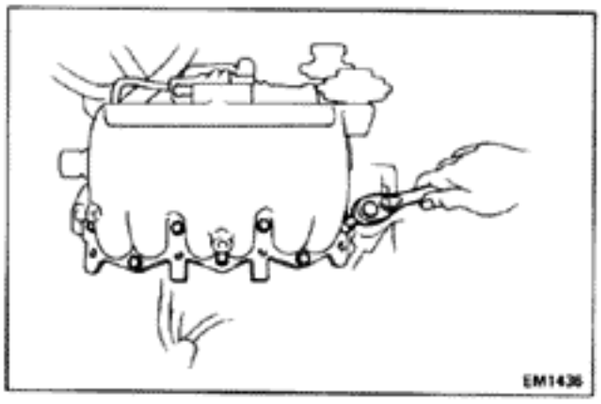

9. REMOVE AIR INTAKE CHAMBER

(a) Remove the five bolts and two nuts.

(b) Loosen the nut of the EGR pipe.

(c) Remove the air intake chamber and gasket.

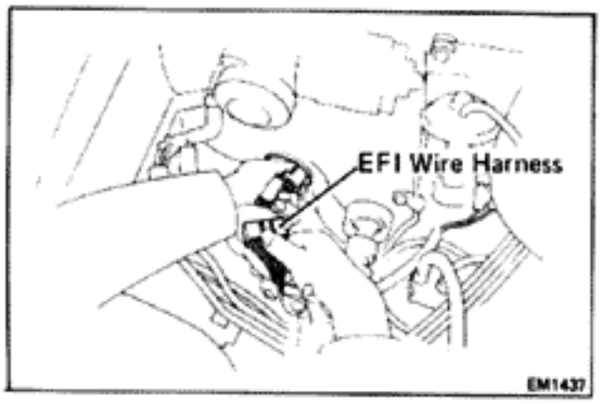

10. DISCONNECT EFI WIRE HARNESS FROM ECU

(a) Remove the glove box.

(b) Remove the ECU.

(c) Disconnect the three connectors.

(d) Pull out the EFI wire harness out through the cowl panel.

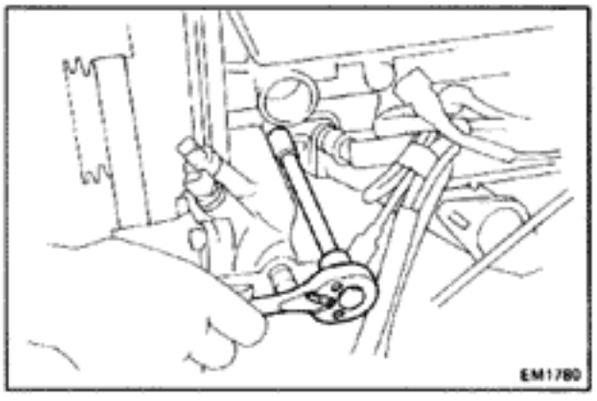

11. REMOVE PULSATION DAMPER AND NO. 1 FUEL PIPE

12. REMOVE WATER OUTLET HOUSING

(a) Loosen the clamp and disconnect the water by-pass hose.

(b) Remove the two bolts and remove the outlet housing.

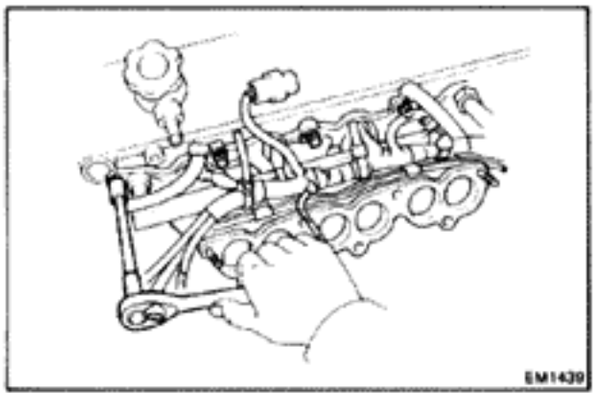

13. REMOVE INTAKE MANIFOLD

Remove the eight bolts and two nuts holding the intake manifold and remove the intake manifold and gasket.

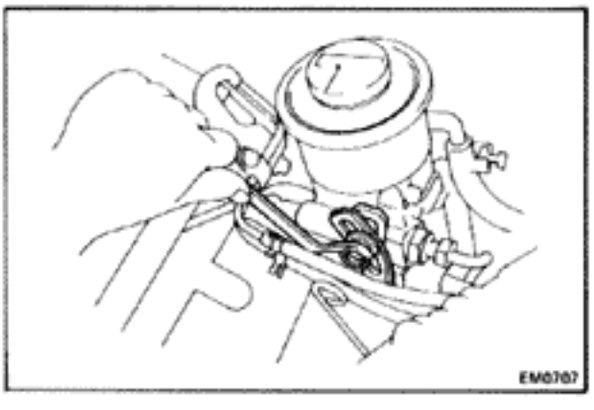

14. REMOVE POWER STEERING PUMP FROM BRACKET

(a) Remove the PS pump pulley with the drive belt.

(b) Remove the PS pump stay.

(c) Remove the PS pump from the bracket.

(d) Lay the PS pump to one side without disconnecting the hoses.

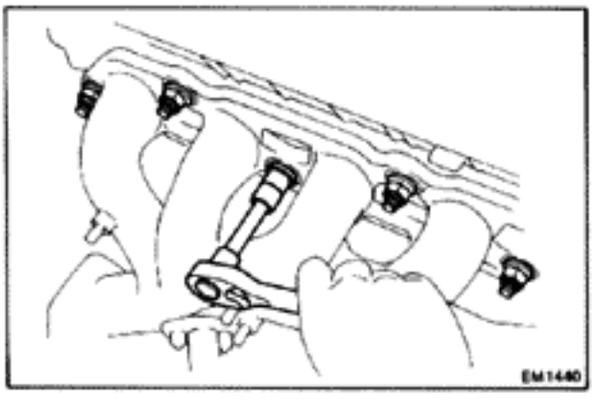

15. REMOVE EXHAUST MANIFOLD

(a) Remove the five nuts and the two heat insulators.

(b) Remove seven nuts and the exhaust manifold.

16. REMOVE TIMING BELT AND CAMSHAFT TIMING PULLEYS (See steps 9 to 13 on page EM-12)

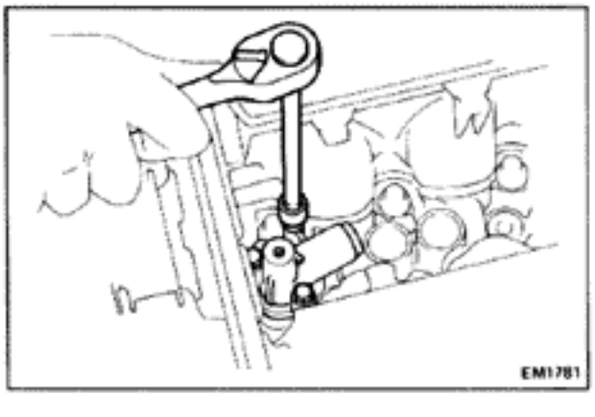

17. REMOVE OIL PRESSURE REGULATOR

(a) Remove the two bolts and the timing belt cover stay.

(b) Remove the three bolts and the oil pressure regulator and gasket.

18. REMOVE NO. 2 TIMING BELT COVER

Remove the three bolts and two nuts and the No. 2 timing belt cover and gasket.

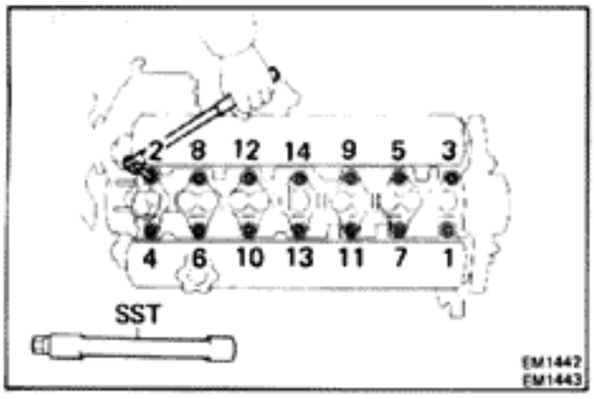

19. REMOVE CYLINDER HEAD BOLTS

Using SST, remove the fourteen head bolts gradually in two or three passes and in the numerical order shown.

SST 09043-38100

CAUTION: Head warpage or cracking could result from removing in incorrect order.

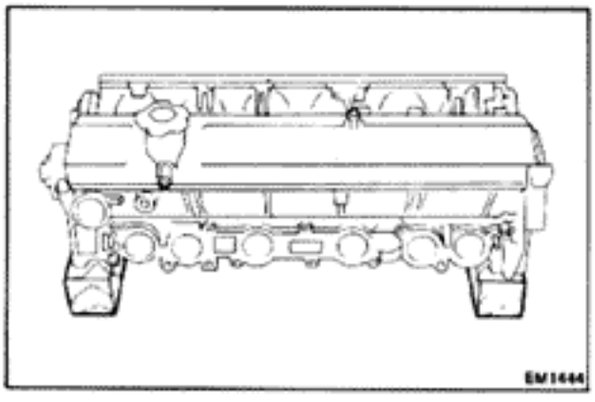

20. REMOVE CYLINDER HEAD

Lift the cylinder head from the dowels on the cylinder block and place the head on wooden blocks on a bench.

If the cylinder head is difficult to lift off, pry with a screwdriver between the head and block saliences.

CAUTION: Be careful not to damage the cylinder head and block surfaces on the cylinder head gasket side.

21. REMOVE EGR COOLER

DISASSEMBLY OF CYLINDER HEAD

(See page EM-18)

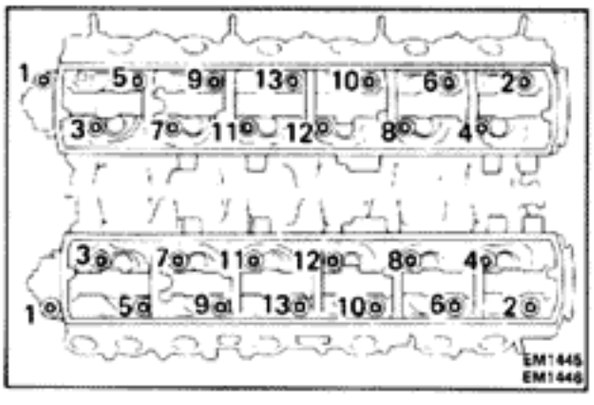

1. REMOVE CYLINDER HEAD COVERS

Remove the two cylinder head covers by loosening the screws.

2. REMOVE NO. 1 AND NO. 2 CAMSHAFT HOUSINGS WITH CAMSHAFT

Remove No. 1 and No. 2 camshaft housings by loosening the nuts (front side) and bolts.

CAUTION: Loosen each camshaft housing nut and bolt a little at a time in the sequence shown in the figure.

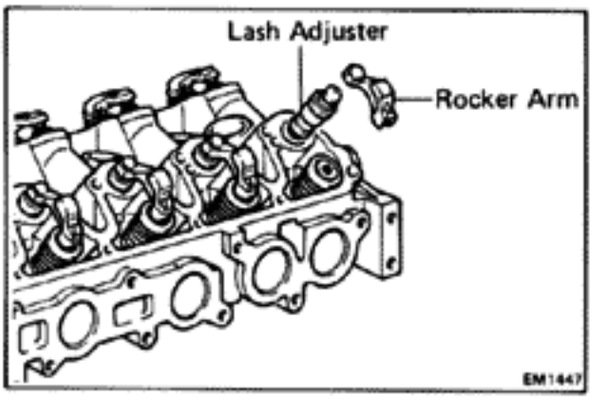

3. REMOVE ROCKER ARMS AND LASH ADJUSTERS

Remove the rocker arms and lash adjusters from the cylinder head.

NOTE: Arrange the rocker arms and lash adjusters in order.

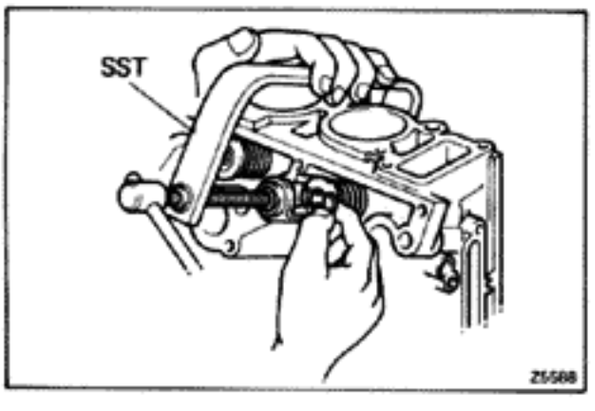

4. REMOVE VALVES

(a) Using SST, compress the valve spring until the two keepers can be removed.

SST 09202-43013

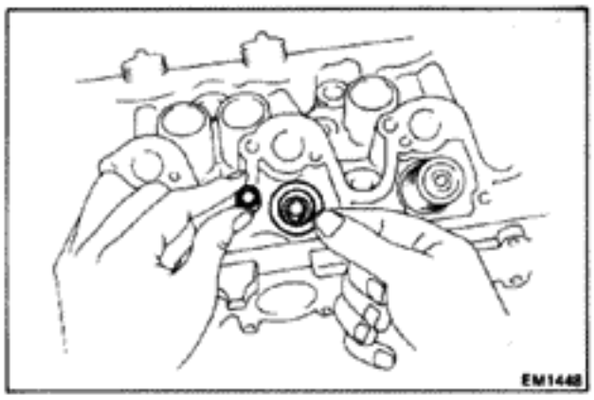

(b) Remove the valve keepers, retainers, springs and valves.

NOTE: Keep valves in order for reinstallation in the same manner.

(c) Remove the valve stem oil seals.

(d) Using a small screwdriver or magnet, remove the valve spring seats.

INSPECTION AND CLEANING OF COMPONENTS

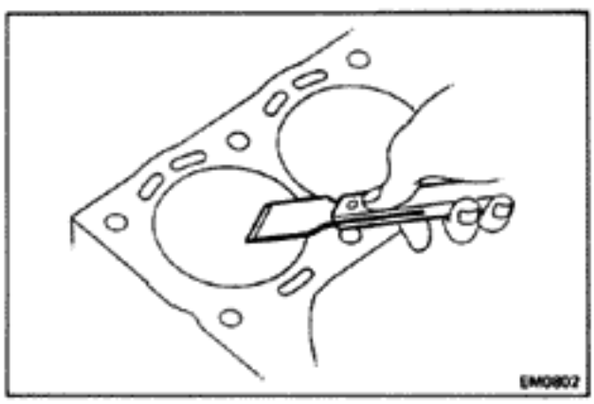

1. CLEAN TOP OF PISTONS AND TOP OF BLOCK

(a) Turn the crankshaft and bring each piston to top dead center. Scrape the carbon from the piston top.

(b) Remove all gasket material from the top of the block. Blow carbon and oil from the bolt holes.

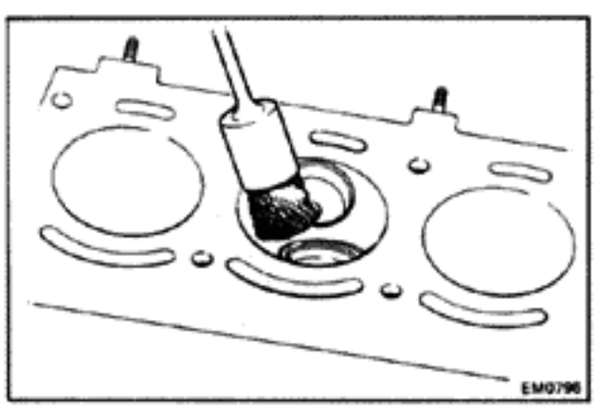

2. CLEAN COMBUSTION CHAMBERS

Using a wire brush, remove all the carbon from the combustion chambers.

CAUTION: Be careful not to scratch the head gasket contact surface.

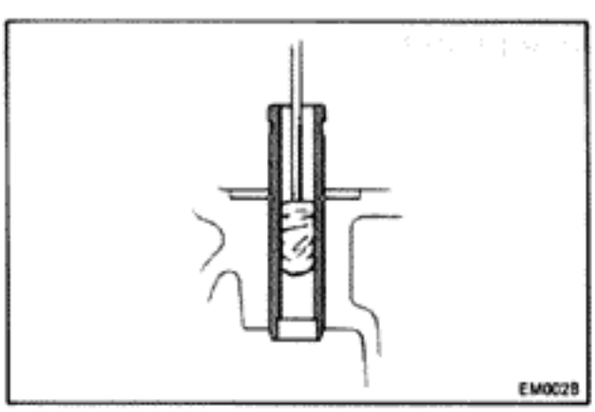

3. CLEAN VALVE GUIDES

Using a valve guide brush and solvent, clean all the valve guides.

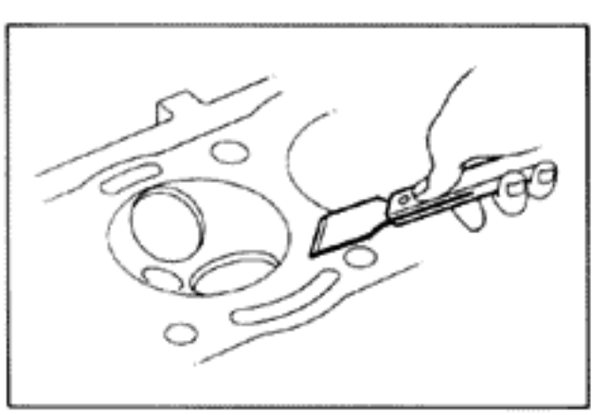

4. REMOVE GASKET MATERIAL

Using a gasket scraper, remove all gasket materials from the manifold and head surface.

CAUTION: Do not scratch the surface.

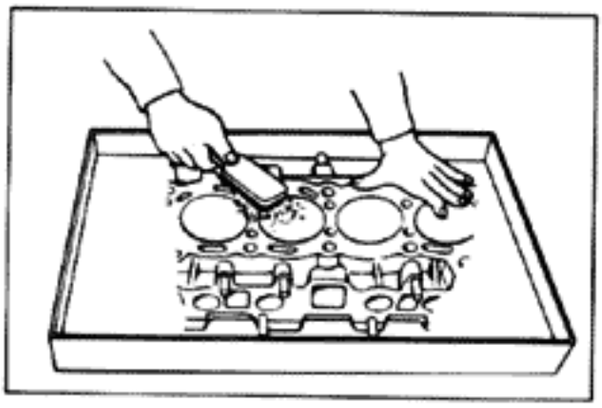

5. CLEAN CYLINDER HEAD

Using a soft brush and solvent, clean the head.

CAUTION: Do not clean the head in a hot tank as this will seriously damage it.

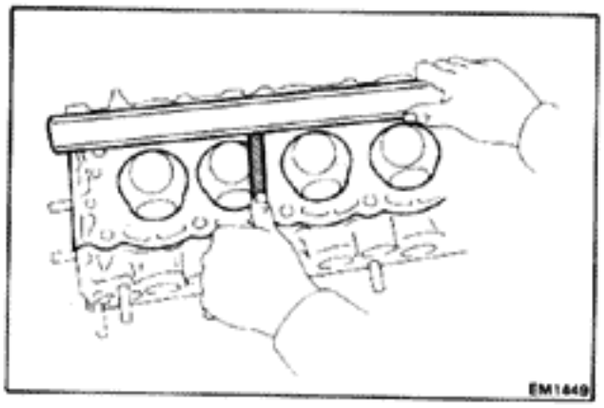

6. CHECK HEAD FOR FLATNESS

(a) Using a precision straight edge and feeler gauge, check that neither the head nor manifold surface is warped.

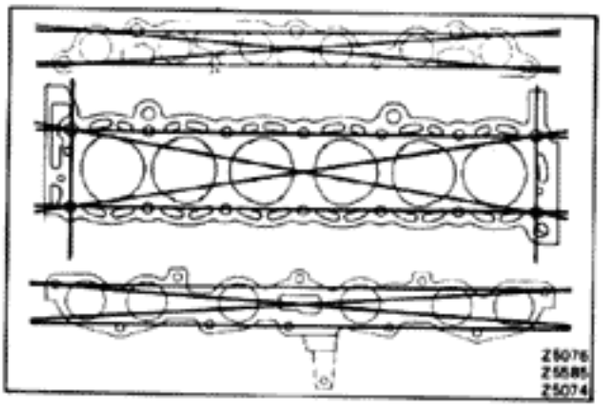

(b) Measure warpage at the four sides and diagonally as illustrated.

Maximum head surface warpage:
0.10 mm (0.0039 in.)

Maximum intake manifold surface warpage:
0.10 mm (0.0039 in.)

Maximum exhaust manifold surface warpage:
0.10 mm (0.0039 in.)

Maximum camshaft housing surface warpage:
0.10 mm (0.0039 in.)

If warpage is greater than specified value, replace the head.

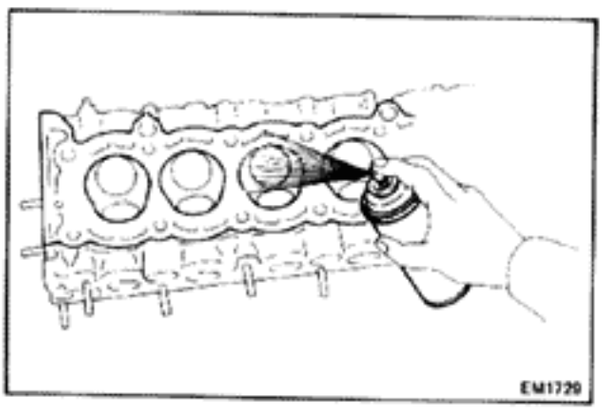

7. INSPECT CYLINDER HEAD FOR CRACKS

Using a dye penetrant, check the combustion chamber, intake and exhaust ports, head surface and the top of the head for cracks.

If a crack is found, replace the head.

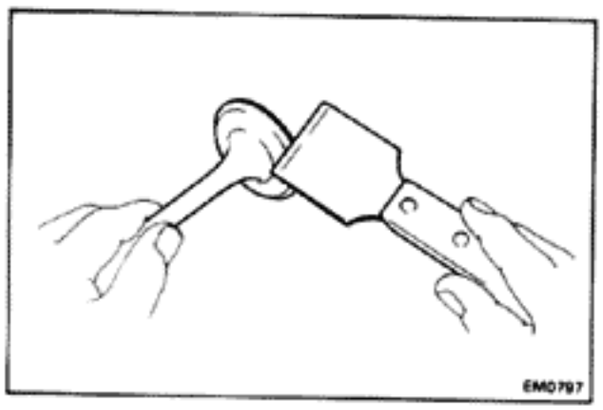

8. CLEAN VALVES

Use a gasket scraper to chip any carbon from the valve head.

Using a wire brush, clean the valve thoroughly.

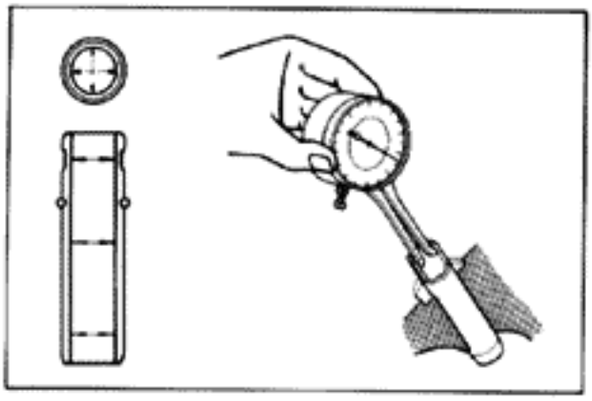

9. INSPECT VALVE STEM GUIDE WEAR

(a) Using a dial indicator or telescoping gauge, measure the inside diameter of the valve guide.

Standard inside diameter: 8.01 — 8.03 mm (0.3154 — 0.3161 in.)

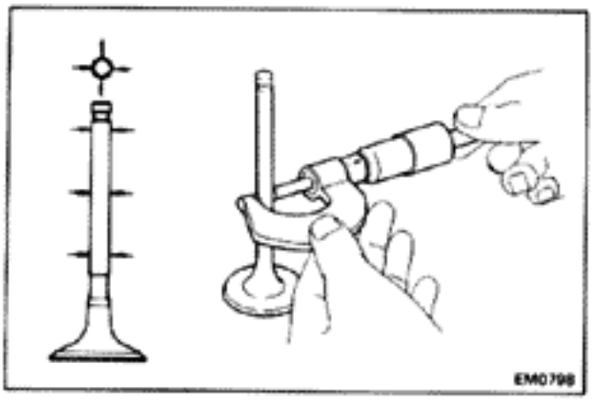

(b) Using a micrometer, measure the diameter of the valve stem.

Standard valve stem diameter:

Intake	**7.970 — 7.985 mm (0.3138 — 0.3144 in.)**
Exhaust	**7.965 — 7.980 mm (0.3136 — 0.3142 in.)**

(c) Subtract the valve stem measurement from the valve guide measurement.

Standard oil clearance:

Intake	**0.025 — 0.060 mm (0.0010 — 0.0024 in.)**
Exhaust	**0.030 — 0.065 mm (0.0012 — 0.0026 in.)**

Maximum oil clearance:

Intake	**0.08 mm (0.0031 in.)**
Exhaust	**0.10 mm (0.0039 in.)**

If the clearance is greater than following values, replace the valve and guide:

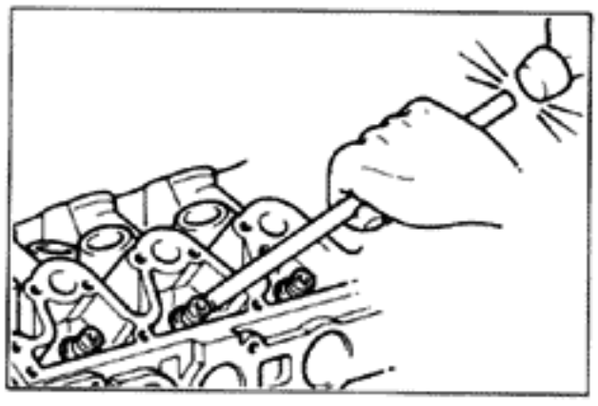

10. IF NECESSARY, REPLACE VALVE GUIDE

(a) Brake the valve guide using a brass bar and hammer.

(b) Heat the cylinder head to approx. 90°C (194°F).

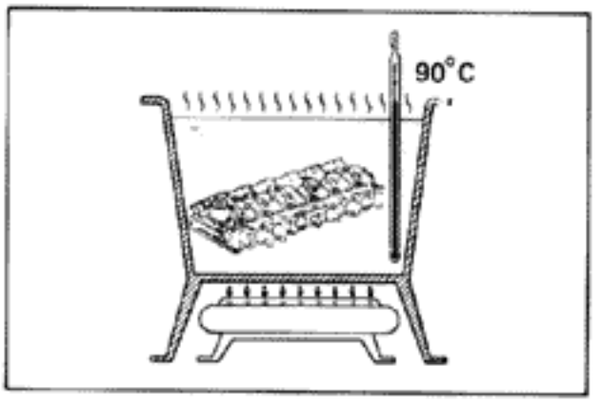

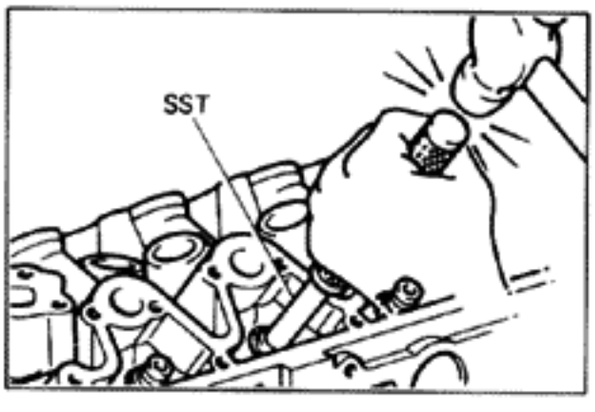

(c) Using SST and a hammer, drive out the valve guide.

SST 09201-60011

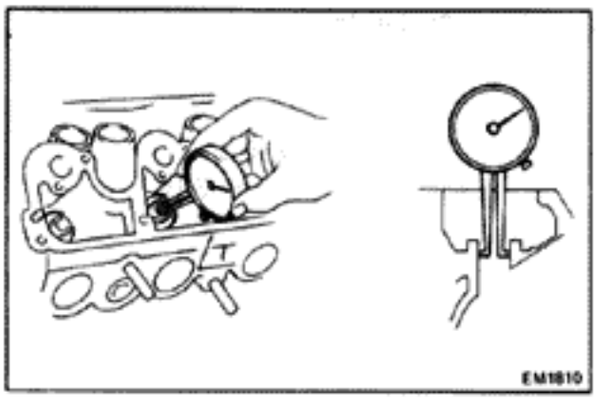

(d) Using a caliper gauae, measure the valve guide bore of the cylinder head.

(e) Select a new valve guide.

If the valve guide bore of the cylinder head is more than 13.027 mm (0.5129 in.), machine the bore to the following dimensions.

Rebored valve guide bushing bore dimension (cold):
13.05-13.077 mm (0.5138-0.5148 in.)

Both intake and exhaust

Guide bore mm (in.)	Guide size
13.000-13.027 (0.5118-0.5129)	Use STD
Over 13.027 (0.5129)	Use O/S 0.05

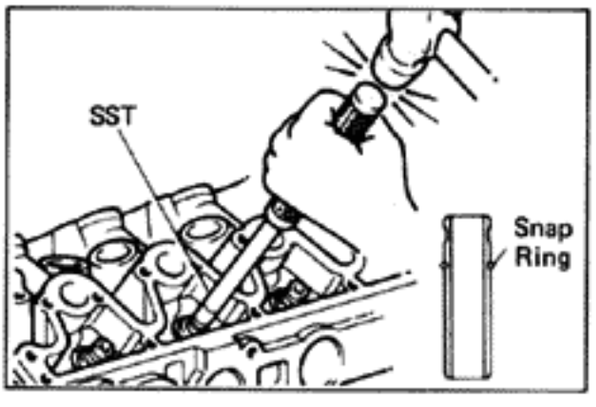

(f) Heat the cylinder head to about 90°C (194°F).

(g) Using SST and a hammer, drive in the new valve guide until the snap ring makes contact with the cylinder head.

SST 09201-60011

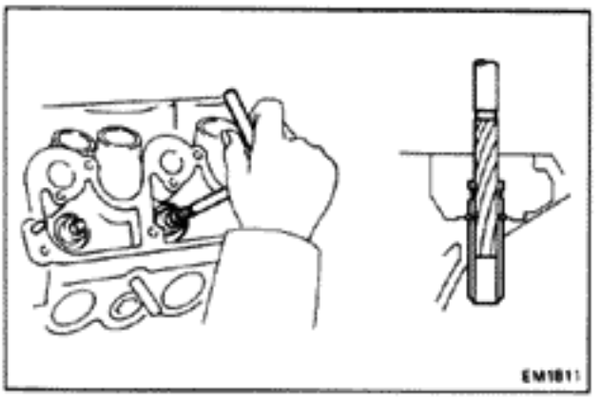

(h) Using a sharp 8-mm reamer, ream the valve guide to obtain specified clearance between the guide and new valve.

Standard oil clearance:

Intake:	**0.025 — 0.060 mm (0.0010 — 0.0024 in.)**
Exhaust:	**0.030 — 0.065 mm (0.0012 — 0.0026 in.)**

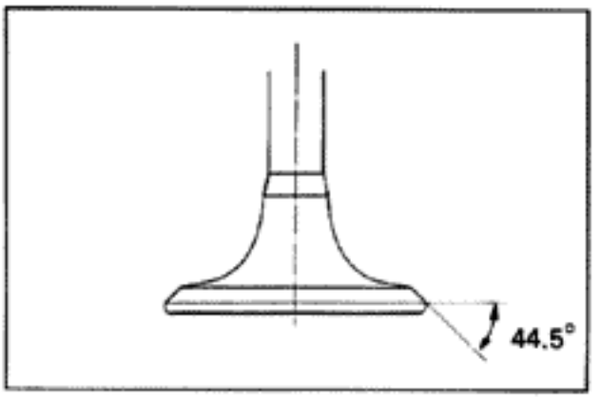

11. INSPECT AND GRIND VALVES

(a) Grind valves only enough to remove pits and carbon.

Make sure the valves are ground at the correct valve face angle.

Valve face angle: 44.5°

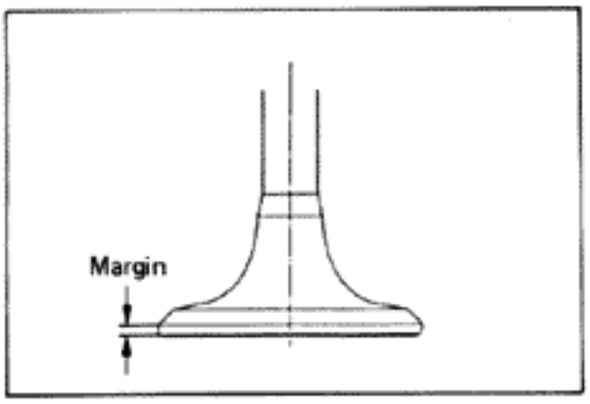

(b) Check the valve head margin.

Minimum margin: Intake 0.5 mm (0.020 in.)
Exhaust 1.0 mm (0.039 in.)

If the valve head margin is less than specified, replace the valve.

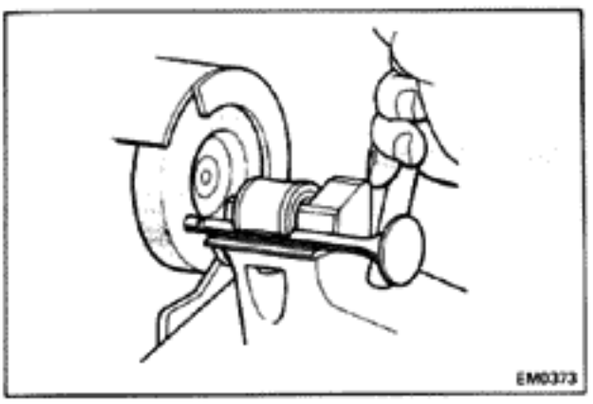

(c) Check the surface of the valve stem tip for wear.

Standard overall length:
Intake 107.5 mm (4.232 in.)
Exhaust 109.7 mm (4.319 in.)

If the valve stem tip is worn, resurface the tip with a grinder or replace the valve.

CAUTION: Do not grind more than 0.5 mm (0.020 in.).

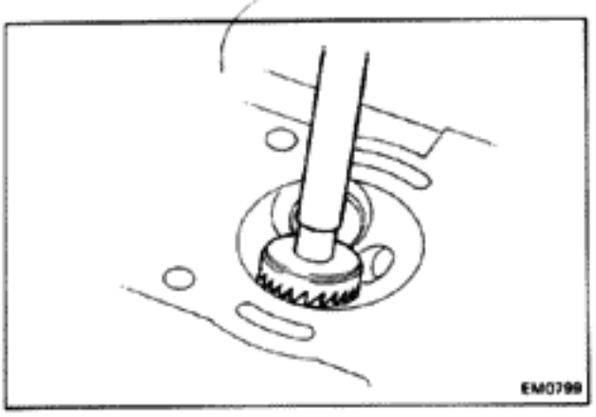

12. INSPECT AND CLEAN VALVE SEATS

(a) Using a 45° carbide cutter, resurface the valve seats. Remove only enough metal to clean the seats.

(b) Check the valve seating position.

Apply a thin coat of prussian blue (or white lead) to the valve face. Install the valve. While applying light pressure to the valve, rotate the valve against the seat.

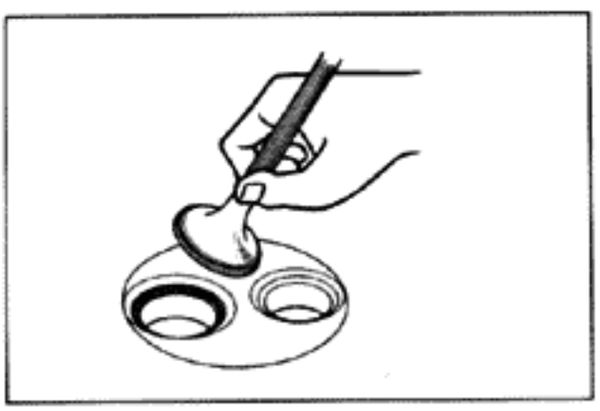

(c) Check the valve face and seat for the following:

- If blue appears 360° around the face, the valve is concentric. If not, replace the valve.
- If blue appears 360° around the valve seat, the guide and seat are concentric. If not, resurface the seat.

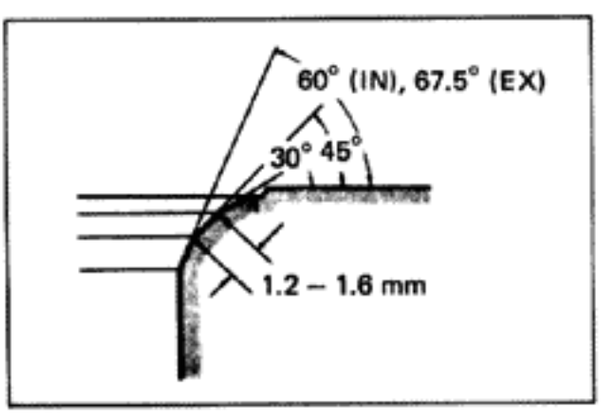

- Check that the seat contact is on the middle of the valve face with the following width:

  1.2 – 1.6 mm (0.047 – 0.063 in.)

  If not correct the valve seat as follows:

  If seating is too high on the valve face, use 30° and 45° cutters to correct the seat.

  If seating is too low on the valve face, use 60° (IN) or 67.5° (EX) and 45° cutters to correct the seat.

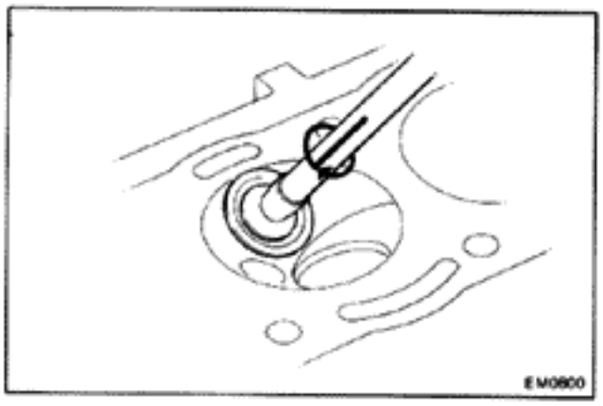

(d) Hand-lap the valve and valve seat together with abrasive compound.

(e) Clean the valve and valve seat after hand-lapping.

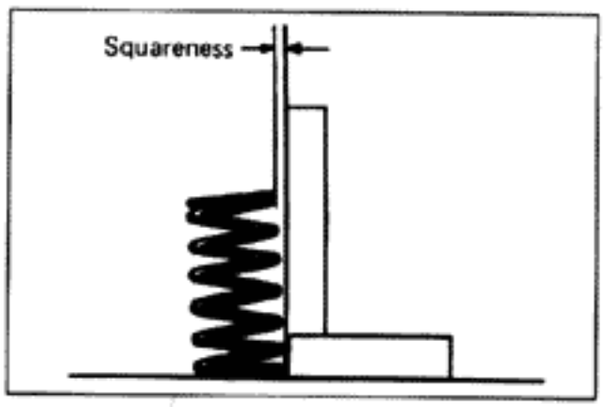

13. INSPECT VALVE SPRINGS

(a) Using a steel square, check the squareness of the valve springs.

Maximum allowable: 2.0 mm (0.079 in.)

If squareness is greater than maximum, replace the valve spring.

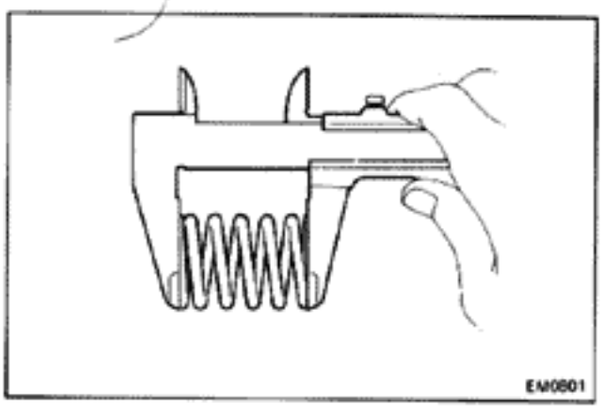

(b) Measure the free height of all springs.

Free height:

Intake side	**49.1 mm (1.933 in.)**
Exhaust side	**52.5 mm (2.067 in.)**

Replace any spring that is not correct.

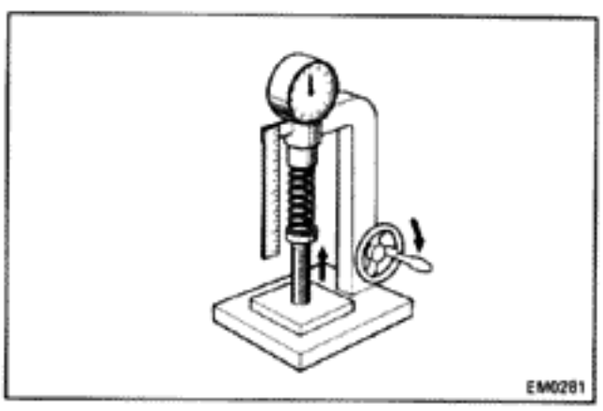

(c) Using a spring tester, check the tension of each spring at the specified installed height.

Installed height:

Intake side	**40.0 mm (1.575 in.)**
Exhaust side	**43.0 mm (1.693 in.)**

Installed tension:

Intake side	**34.7 — 38.3 kg (76.5 — 84.4 lb, 340 — 376 N)**
Exhaust side	**33.3 — 36.7 kg (73.4 — 80.9 lb, 327 — 360 N)**

If not within the installed tension specification, replace the spring.

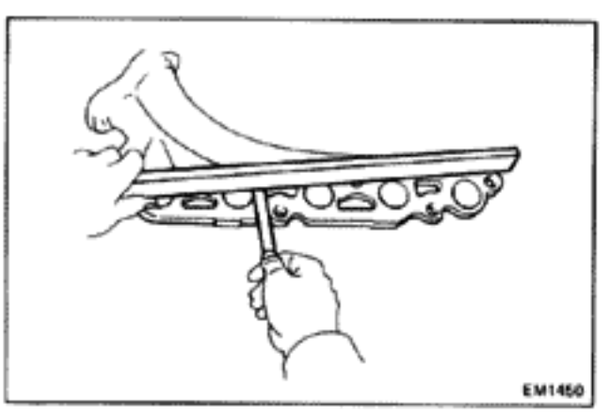

14. INSPECT INTAKE, EXHAUST MANIFOLDS AND AIR INTAKE CHAMBER

Using a precision straight edge and feeler gauge, check the surfaces contacting the cylinder head for warpage.

Maximum intake warpage: 0.1 mm (0.004 in.)
Maximum exhaust warpage: 0.75 mm (0.0295 in.)
Maximum air intake chamber warpage: 0.1 mm (0.004 in.)

If warpage is greater than maximum, replace the manifold or air intake chamber.

ASSEMBLY OF CYLINDER HEAD

(See page EM-18)

NOTE:

- Thoroughly clean all parts to be assembled.
- Before installing the parts, apply new engine oil to all sliding and rotating surfaces.
- Replace all gaskets, O-rings and oil seals with new parts.

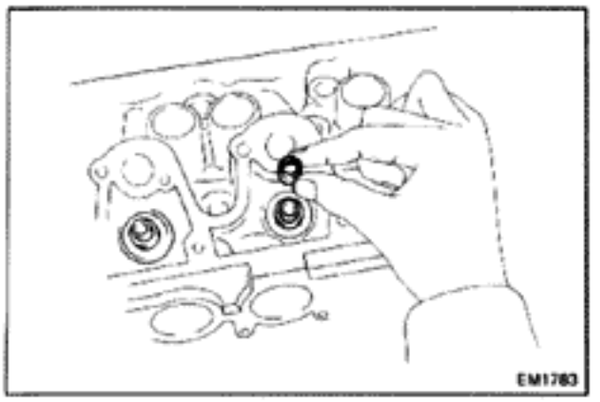

INSTALL VALVES

(a) Insert valves in the cylinder head valve guides. Make sure the valves are installed in the correct order.

(b) Install the valve spring seats and new seals.

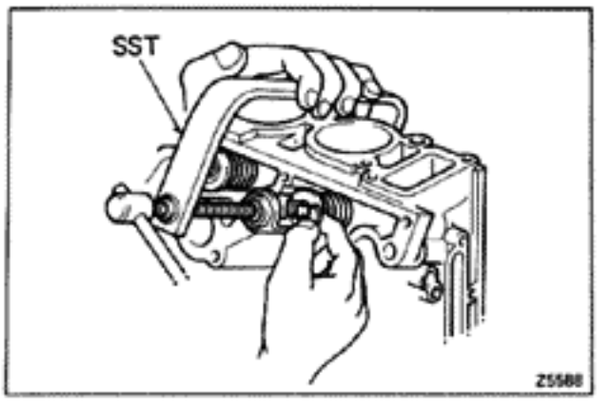

(c) Install springs and spring retainers on the valves.

(d) Using SST, compress the valve springs and place two keepers around the valve stem.

SST 09202-43013

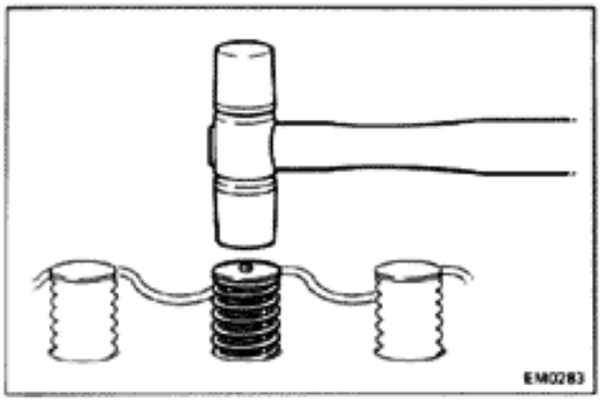

(e) Tap the stem lightly to assure proper fit.

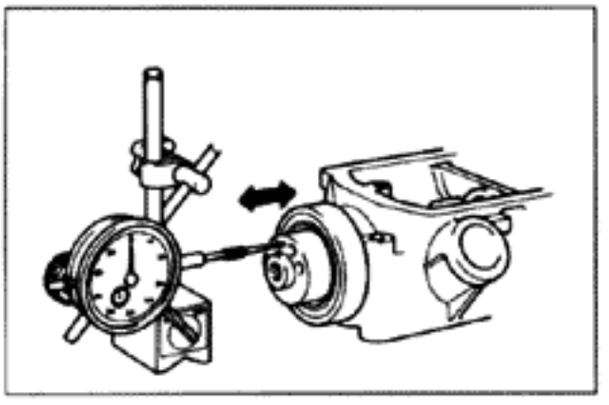

INSPECTION OF CAMSHAFT

1. MEASURE CAMSHAFT THRUST CLEARANCE

Using a dial gauge, measure the camshaft thrust clearance.

Standard clearance: 0.05 — 0.25 mm (0.0020 — 0.0098 in.)

Maximum clearance: 0.30 mm (0.0118 in.)

If clearance is greater than maximum, replace the camshaft and/or camshaft housing.

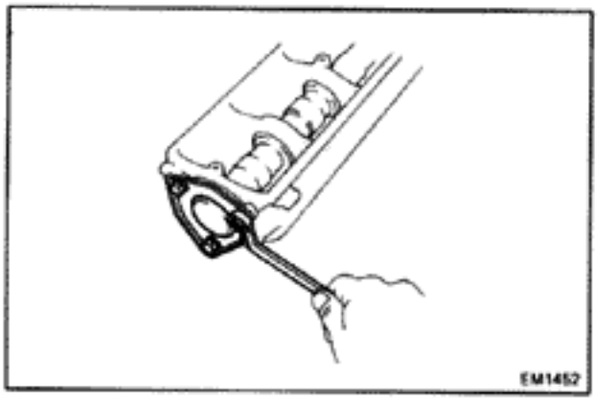

2. REMOVE CAMSHAFTS FROM CAMSHAFT HOUSINGS

(a) Remove camshaft housing rear covers by loosening the bolts.

(b) While turning the camshaft, slowly pull it out so as not to damage the camshaft housing.

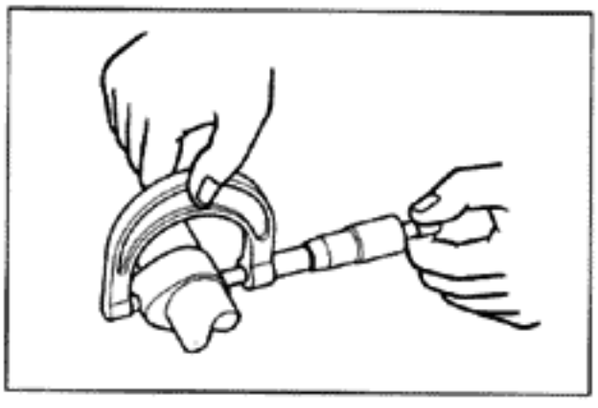

3. INSPECT CAMSHAFTS AND CAMSHAFT HOUSINGS

(a) Using a micrometer, measure the cam lobes.

Standard lobe height

Intake	**35.660 – 35.670 mm (1.4039 – 1.4043 in.)**
Exhaust	**35.662 – 35.672 mm (1.4040 – 1.4044 in.)**

Minimum lobe height

Intake	**35.465 mm (1.3963 in.)**
Exhaust	**35.467 mm (1.3963 in.)**

If the lobe height is less than the minimum allowable, the camshaft is worn and must be replaced.

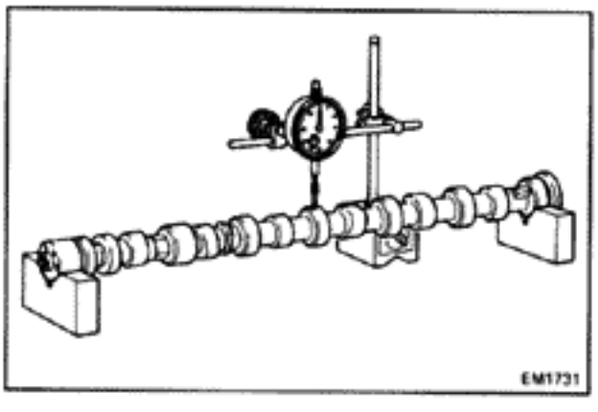

(b) Place the camshaft on V-blocks and measure the runout at the center journal.

Maximum circle runout: 0.04 mm (0.0016 in.)

If the runout is greater than maximum allowable, replace the camshaft.

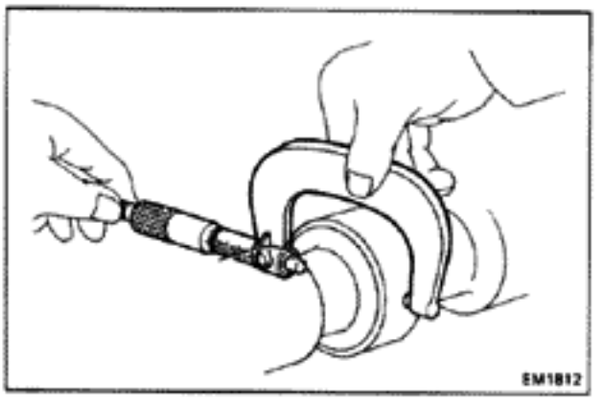

(c) Using a micrometer, measure the journal diameter.

Standard journal diameter:

No. 1	**37.959 – 37.975 mm (1.4944 – 1.4951 in.)**
No. 2	**42.959 – 42.975 mm (1.6913 – 1.6919 in.)**
No. 3	**43.459 – 43.475 mm (1.7110 – 1.7116 in.)**
No. 4	**43.959 – 43.975 mm (1.7307 – 1.7313 in.)**
No. 5	**44.459 – 44.475 mm (1.7504 – 1.7510 in.)**
No. 6	**44.959 – 44.975 mm (1.7700 – 1.7707 in.)**
No. 7	**45.459 – 45.475 mm (1.7897 – 1.7904 in.)**

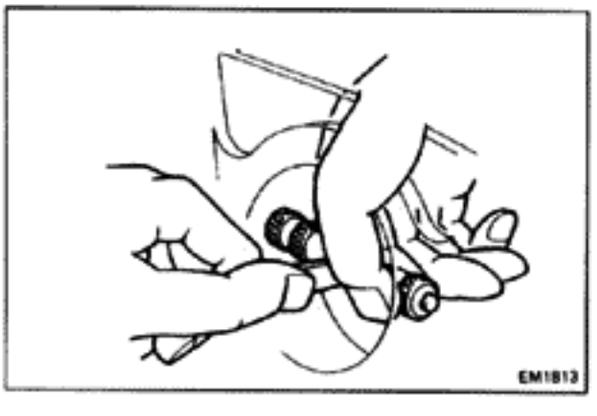

(d) Using an inside micrometer, measure the housing bore.

(e) Subtract the journal diameter measurement from the housing bore measurement.

Standard clearance: 0.025 – 0.066 mm (0.0010 – 0.0026 in.)

Maximum clearance: 0.1 mm (0.004 in.)

If the clearance is greater than maximum, replace the camshaft and if necessary, the housing.

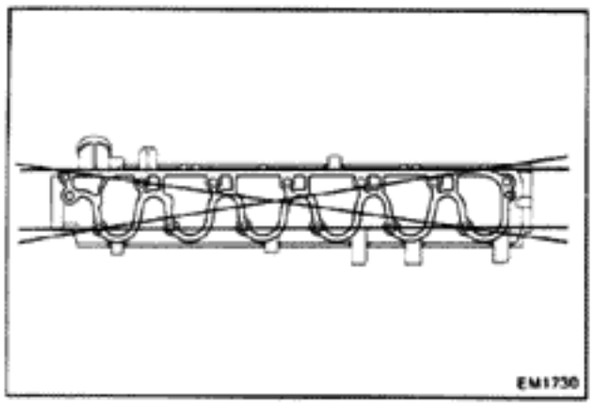

4. INSPECT CAMSHAFT HOUSINGS FOR FLATNESS

Using a precision straight edge and feeler gauge, check the surfaces contacting the cylinder head for warpage.

Maximum cylinder head surface warpage:
0.10 mm (0.0039 in.)

If warpage is greater than maximum, replace the housing.

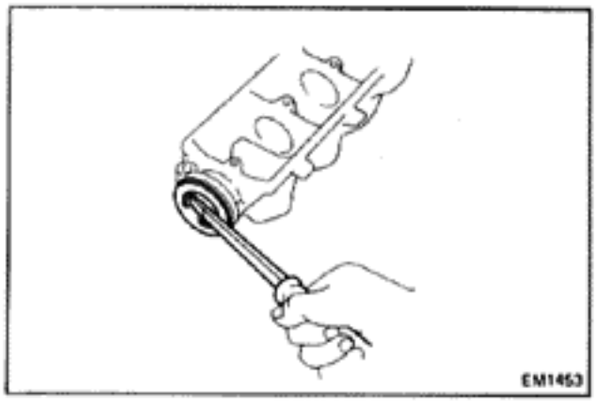

REPLACEMENT OF CAMSHAFT HOUSING OIL SEAL

NOTE: There are two ways of oil seal replacement.

1. IF CAMSHAFT IS REMOVED FROM CAMSHAFT HOUSING:

(a) Remove the oil seal from the camshaft housing.
- Using a screwdriver, pry out the oil seal.

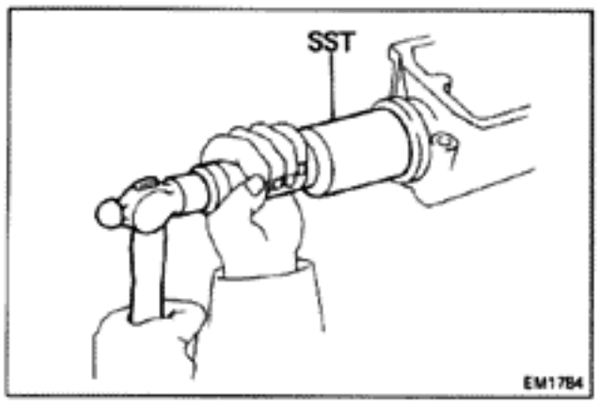

(b) Install the new oil seal on the camshaft housing.
- Apply MP grease to the oil seal.
- Using SST, install the new oil seal.

SST 09214-60010

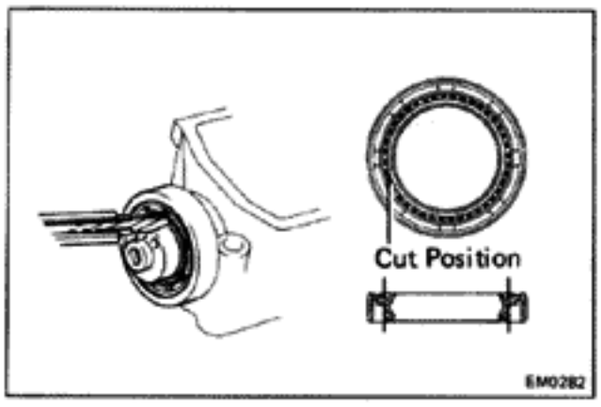

2. IF CAMSHAFT HOUSING IS INSTALLED ON CYLINDER HEAD:

(a) Cut the oil seal.
- As shown in the figure, cut off the oil seal lips.

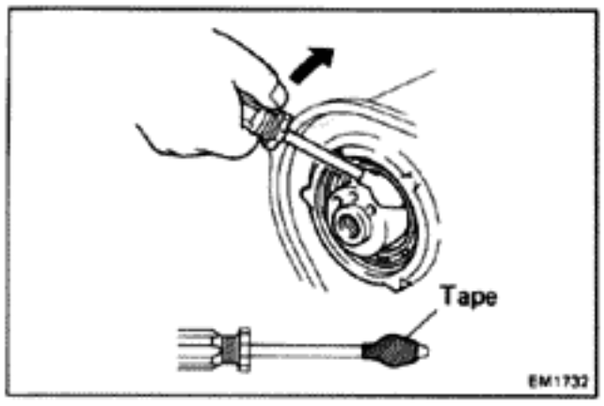

(b) Remove the oil seals.
- Using a screwdriver, pry out the oil seal.

NOTE: Be careful not to damage the camshaft. Tape the screwdriver.

(c) Inspect the camshaft.
- Check the contact surface of camshaft oil seal lip for cracks or damage.

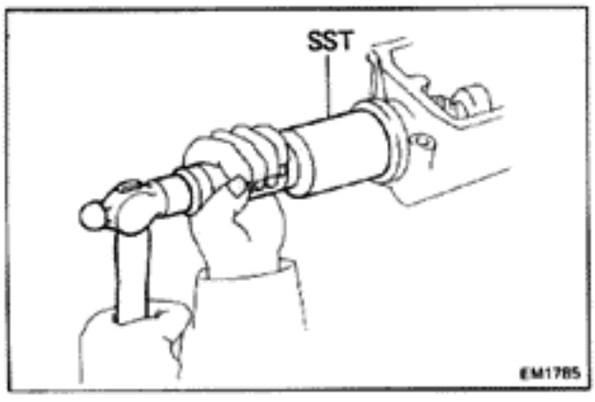

(d) Install the oil seal in the camshaft housings.
- Apply MP grease to the oil seal.
- Using SST, install the new oil seal.

SST 09214-60010

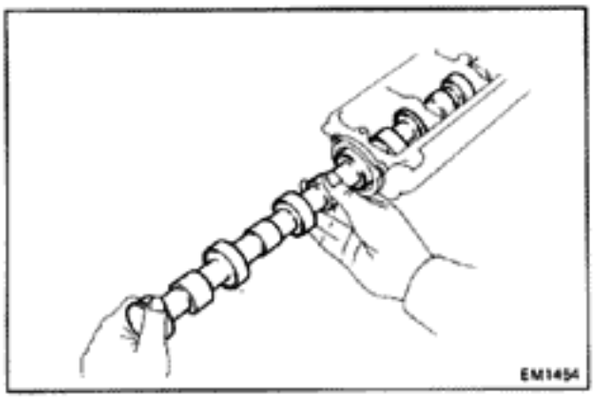

3. INSTALL CAMSHAFTS IN CAMSHAFT HOUSINGS

(a) Insert the camshafts into each camshaft housing.

(b) Install the O-rings and rear end covers.

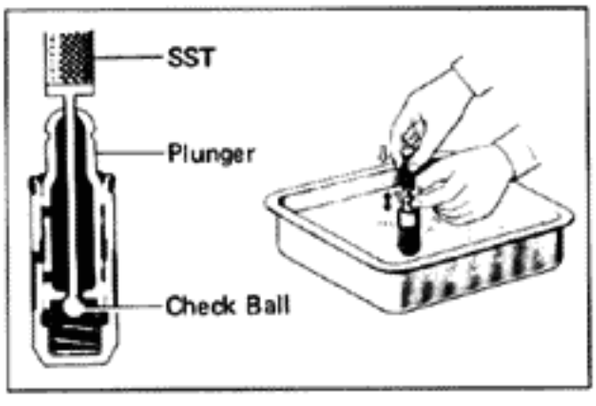

4. BLEED LASH ADJUSTER

(a) Immerse the lash adjuster into light oil.

(b) Insert SST into the plunger hole and slide the plunger up and down several times while pushing down lightly on the check ball.

SST 09276-70010

(c) Repeat steps (a) and (b) when the plunger stroke is beyond about 0.5 mm (0.020 in.).

(d) Replace the lash adjuster with a new one if the plunger stroke exceeds 0.5 mm (0.020 in.) even after repeating steps (a) and (b) several times.

NOTE: Do not disassemble the lash adjuster.

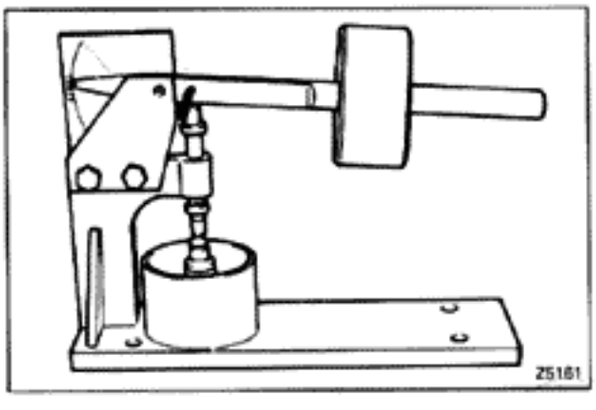

5. LASH ADJUSTER LEAK DOWN TEST

(a) Bleed the lash adjuster.

(b) Using a leak down tester, apply 20 kg (44.1 lb, 196 N) of pressure to the plunger and measure its slide down speed after it has slid down about 2 mm (0.08 in.).

Leak down time: 2 — 7 seconds per 1 mm (0.04 in.)

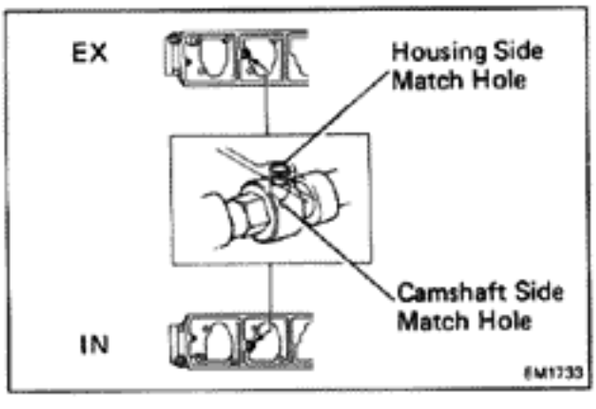

(c) Make sure that the match hole on the No. 2 journal of the camshaft housing is aligned with that of the camshaft.

6. CHECK OIL PRESSURE REGULATOR FOR LASH ADJUSTER (See page LU-9)

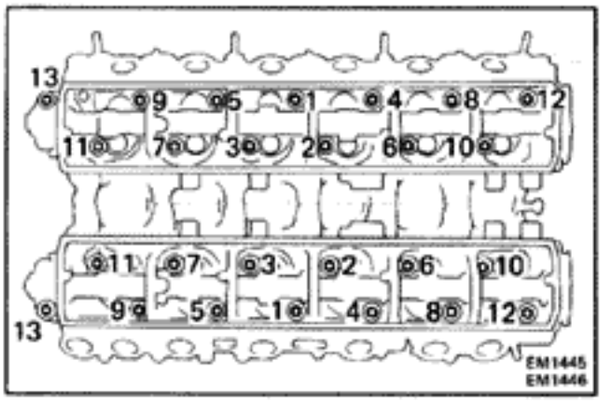

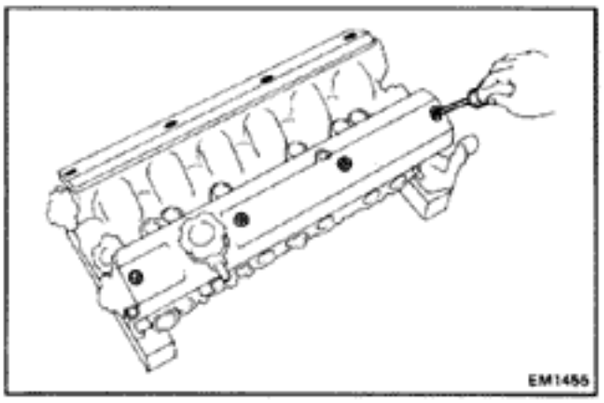

7. INSTALL LASH ADJUSTERS AND ROCKER ARMS

8. INSTALL CAMSHAFT HOUSINGS WITH CAMSHAFTS

(a) Place new gaskets over dowels on the cylinder head.

(b) Position the camshaft housing over dowels on the cylinder head.

(c) Install and tighten the housing nuts and bolts gradually in three passes in the sequence shown. Torque the nuts and bolts on the final pass.

Torque: 220 kg-cm (16 ft-lb, 22 N·m)

9. INSTALL CYLINDER HEAD COVERS

(a) Install the gaskets to the cylinder heads.

(b) Place head covers on the camshaft housing and install the seals and screws.

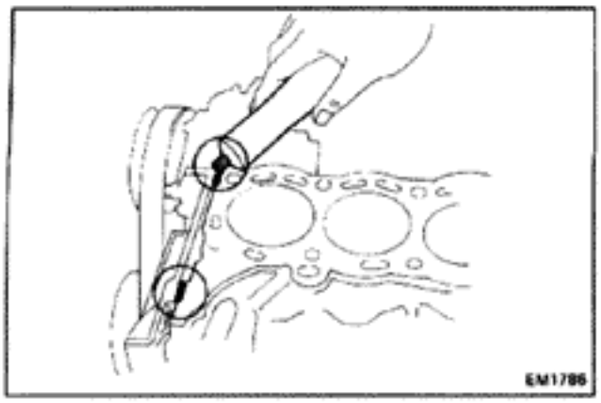

INSTALLATION OF CYLINDER HEAD

1. INSTALL EGR COOLER

2. APPLY SEALER TO CYLINDER BLOCK

(a) Apply seal packing to the two locations shown.

Seal packing: Part No. 08826-00080 or equivalent

(b) Place a new head gasket over the dowels on the cylinder block.

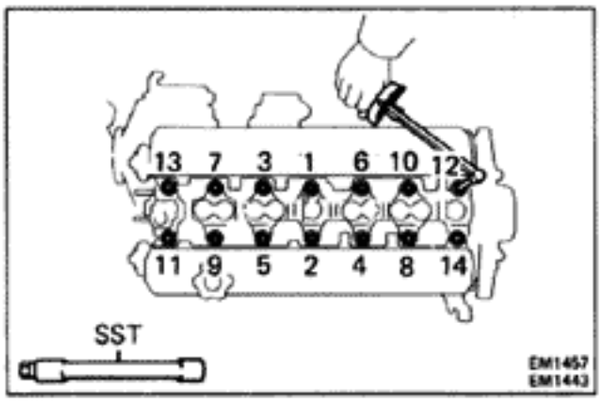

3. INSTALL CYLINDER HEAD

(a) Position the cylinder head over dowels on the block.

(b) Using SST, install and tighten the head bolts gradually in three passes and in the sequence shown. Torque the bolts on the final pass.

SST 09043-38100

Torque: 800 kg-cm (58 ft-lb, 78 N·m)

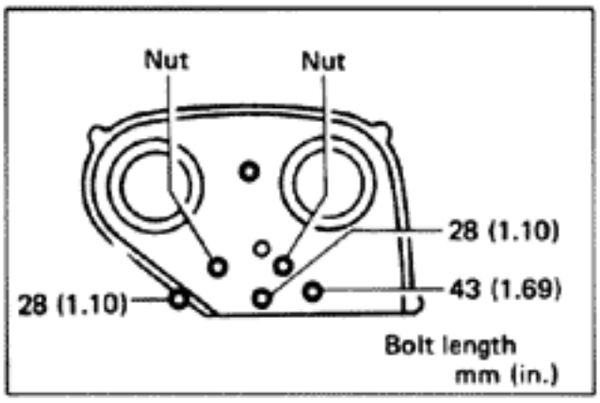

4. INSTALL NO. 2 TIMING BELT COVER

(a) Position a new gasket on the cylinder head.

(b) Install the No. 2 timing belt cover with three bolts and two nuts.

Torque: 130 kg-cm (9 ft-lb, 13 N·m)

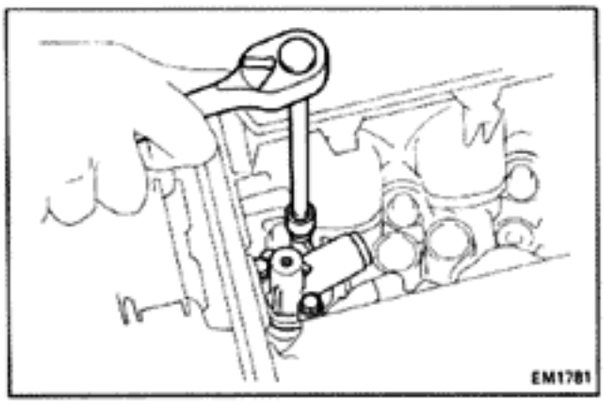

5. INSTALL OIL PRESSURE REGULATOR

(a) Position a new gasket on the cylinder head.

(b) Install the oil pressure regulator with three bolts.

(c) Install the timing belt cover stay with two bolts.

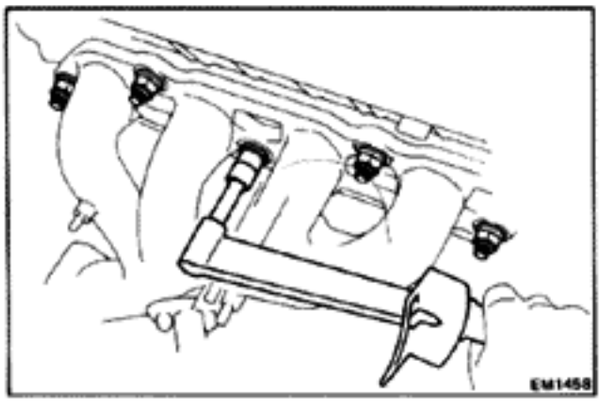

6. INSTALL CAMSHAFT TIMING PULLEYS AND TIMING BELT

(See steps 9 to 14 on pages EM-15 to 17)

7. INSTALL EXHAUST MANIFOLD

(a) Position a new gasket on the cylinder head.

(b) Install the exhaust manifold with seven nuts. Torque the nuts.

Torque: 400 kg-cm (29 ft-lb, 39 N·m)

8. INSTALL TWO INSULATORS

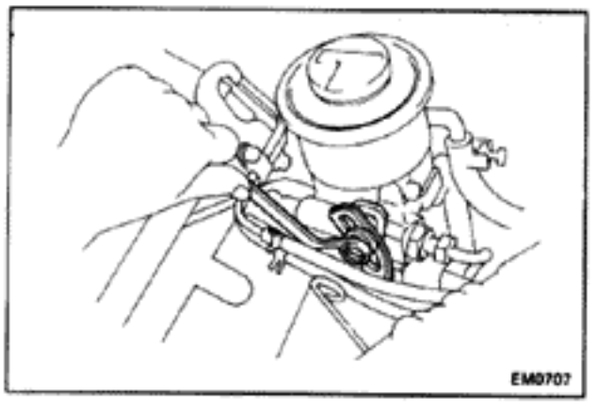

9. INSTALL POWER STEERING PUMP ONTO BRACKET

(a) Install the PS pump and stay.

(b) Install the PS pump pulley with the drive belt.

(c) Adjust the belt tension by prying until the specified belt tension is obtained. (See page MA-4)

(e) Tighten the idler pulley nut and adjusting bolt.

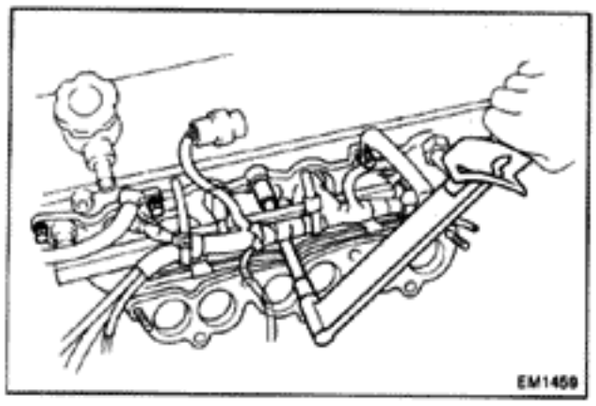

10. INSTALL INTAKE MANIFOLD

(a) Position a new gasket on the cylinder head.

(b) Install the intake manifold with eight bolts and two nuts. Torque the bolts and nuts.

Torque: 180 kg-cm (13 ft-lb, 18 N·m)

11. CONNECT EFI WIRE HARNESS TO ECU

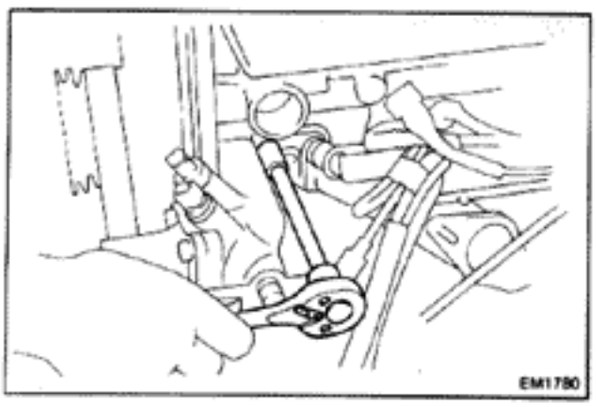

12. INSTALL WATER OUTLET HOUSING

(a) Install the water outlet housing with two bolts.

(b) Connect the water by-pass hose and tighten the clamp.

13. INSTALL NO. 1 FUEL PIPE AND PULSATION DAMPER

(a) Finger tighten the pulsation damper and union bolt with new gaskets on the fuel pipe.

(b) Tighten the fuel pipe, being careful not to bend it.

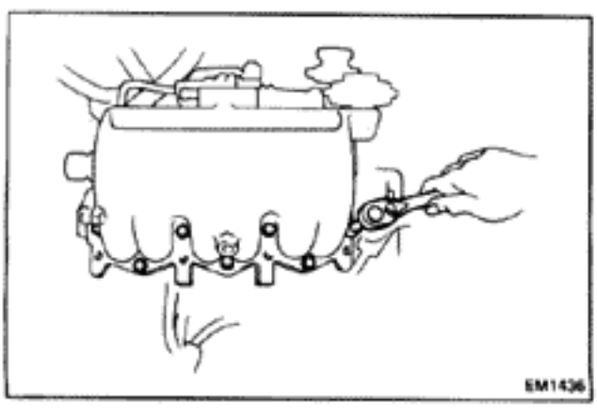

14. INSTALL AIR INTAKE CHAMBER

(a) Position a new gasket on the intake manifold.

(b) Install the air chamber with five bolts and two nuts. Torque the bolts and nuts.

(c) Tighten the nut of the EGR valve connecting pipe.

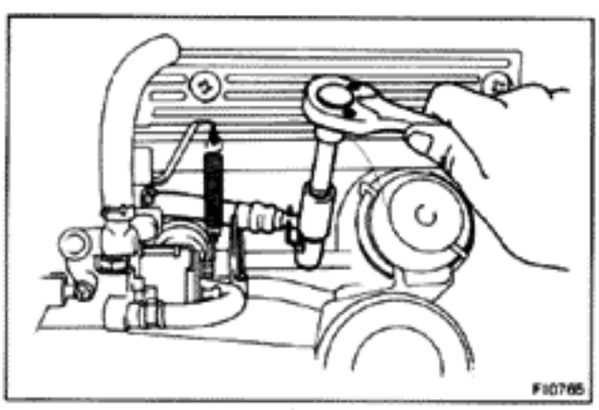

15. CONNECT COLD START INJECTOR FUEL HOSE TO DELIVERY PIPE

Install the new gasket, fuel hose, another gasket and union bolt to the delivery pipe.

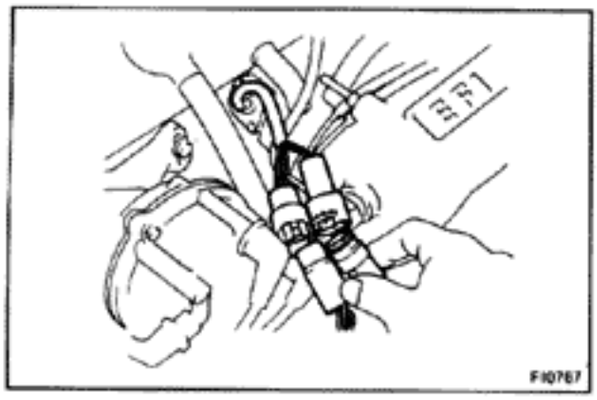

16. **CONNECT FOLLOWING WIRES:**
    (a) Cold start injector wire
    (b) Water temp. sensor wire
    (c) Start injection time switch wire
    (d) Water temp. sending unit wire
    (e) Throttle position sensor wire connector
    (f) ISC valve wire connectors

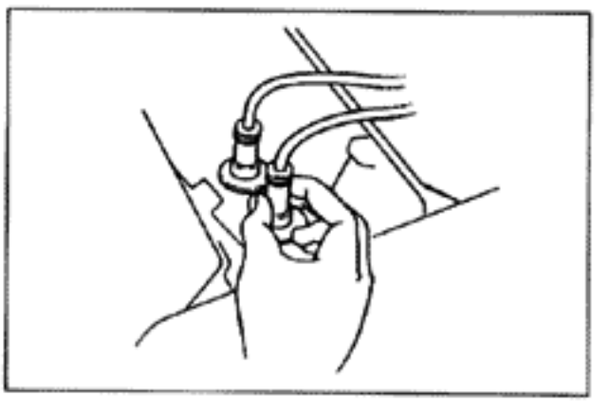

17. **INSTALL DISTRIBUTOR AND SET TIMING**
    (See pages IG-8, 9)

18. **INSTALL SPARK PLUGS AND WIRES**
    (a) Install the six spark plugs. Torque the plugs.
    Torque: 170 kg-cm (12 ft-lb, 17 N·m)
    (b) Install the spark plug wire clips with the bolt.
    (c) Connect the wires to the plugs.

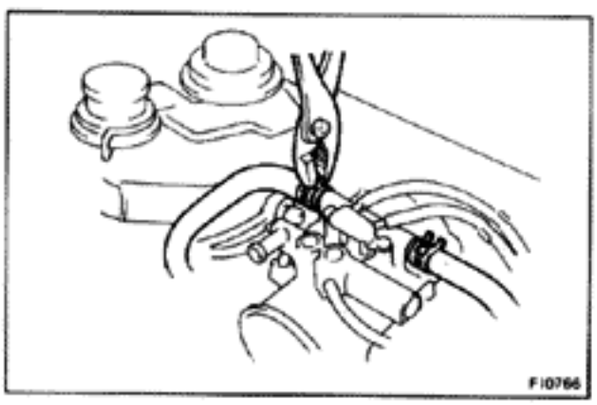

19. **INSTALL VACUUM PIPE SUBASSEMBLY**
    Install the vacuum pipe with bond cable and three bolts.

20. **CONNECT FOLLOWING HOSES:**
    (a) Emission control hoses to the throttle body and air intake chamber
    (b) Fuel hoses to the fuel hose support
    (c) Two PCV hoses to the cylinder head cover
    (d) No. 2 water by-pass hose to throttle body
    (e) No. 1 water by-pass hose to ISC valve

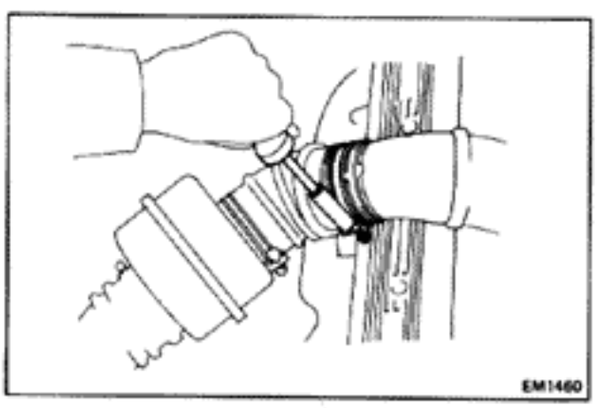

21. **INSTALL AIR INTAKE CONNECTOR PIPE**

22. **INSTALL AIR INTAKE CONNECTOR**
    (a) Connect the throttle body hose to the throttle body and tighten the clamp.
    (b) Install the two bolts.
    (c) Connect the No. 1 air valve hose to the air intake connector.

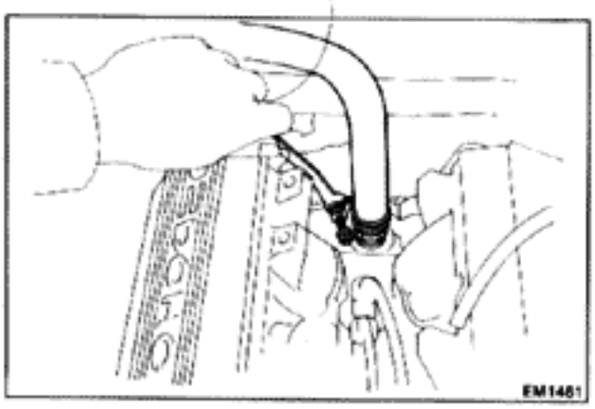

23. **INSTALL TWO HEATER HOSES**

24. **INSTALL RADIATOR UPPER HOSE**

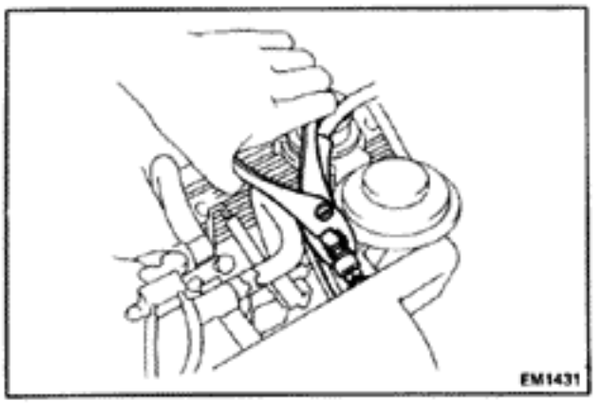

25. CONNECT FOLLOWING HOSES:

(a) EGR vacuum hose

(b) Fuel hose

(c) Actuator vacuum hose

(d) Brake booster vacuum hose

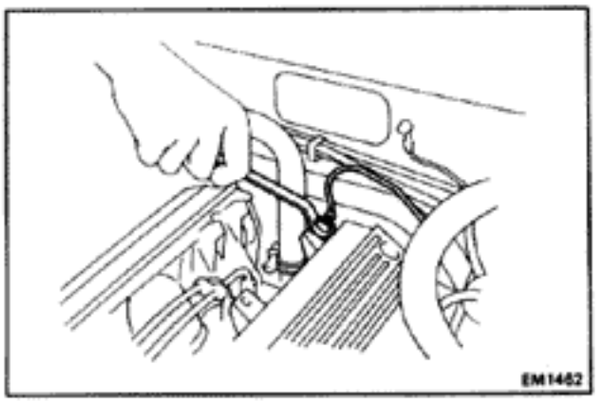

26. CONNECT FOLLOWING WIRES AND CABLES:

(a) Distributor connector

(b) High-tension cord from the ignition coil

(c) Oxygen sensor wire connector

(d) Ground strap to cylinder head cover

(e) Temp. switch wire (for A/T)

(f) Solenoid resistor wire connector

(g) Knock sensor wire connector

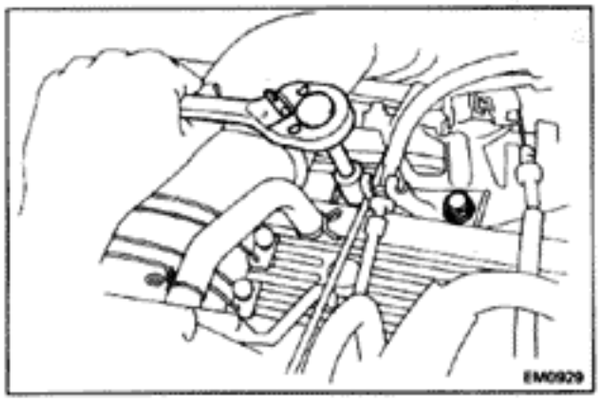

27. INSTALL ACCELERATOR AND ACTUATOR CABLE BRACKET TO CYLINDER HEAD COVER

28. INSTALL THROTTLE CABLE BRACKET TO CYLINDER HEAD COVER (for A/T)

29. FILL WITH COOLANT

Close the radiator and engine drain cocks and fill with coolant.

Total capacity: Dry fill

M/T 8.0 liters (8.5 US qts, 7.0 Imp. qts)

A/T 7.9 liters (8.3 US qts, 7.0 Imp. qts)

30. CONNECT CABLE TO NEGATIVE TERMINAL OF BATTERY

31. START ENGINE

Warm up the engine and check for leaks.

32. PERFORM ENGINE ADJUSTMENT

(a) Recheck the ignition timing. (See page IG-10)

(b) Retighten the cylinder head bolts.
(See step 3 on page EM-34)

33. ROAD TEST

Perform a road test.

34. RECHECK COOLANT AND ENGINE OIL LEVEL

CYLINDER BLOCK

COMPONENTS

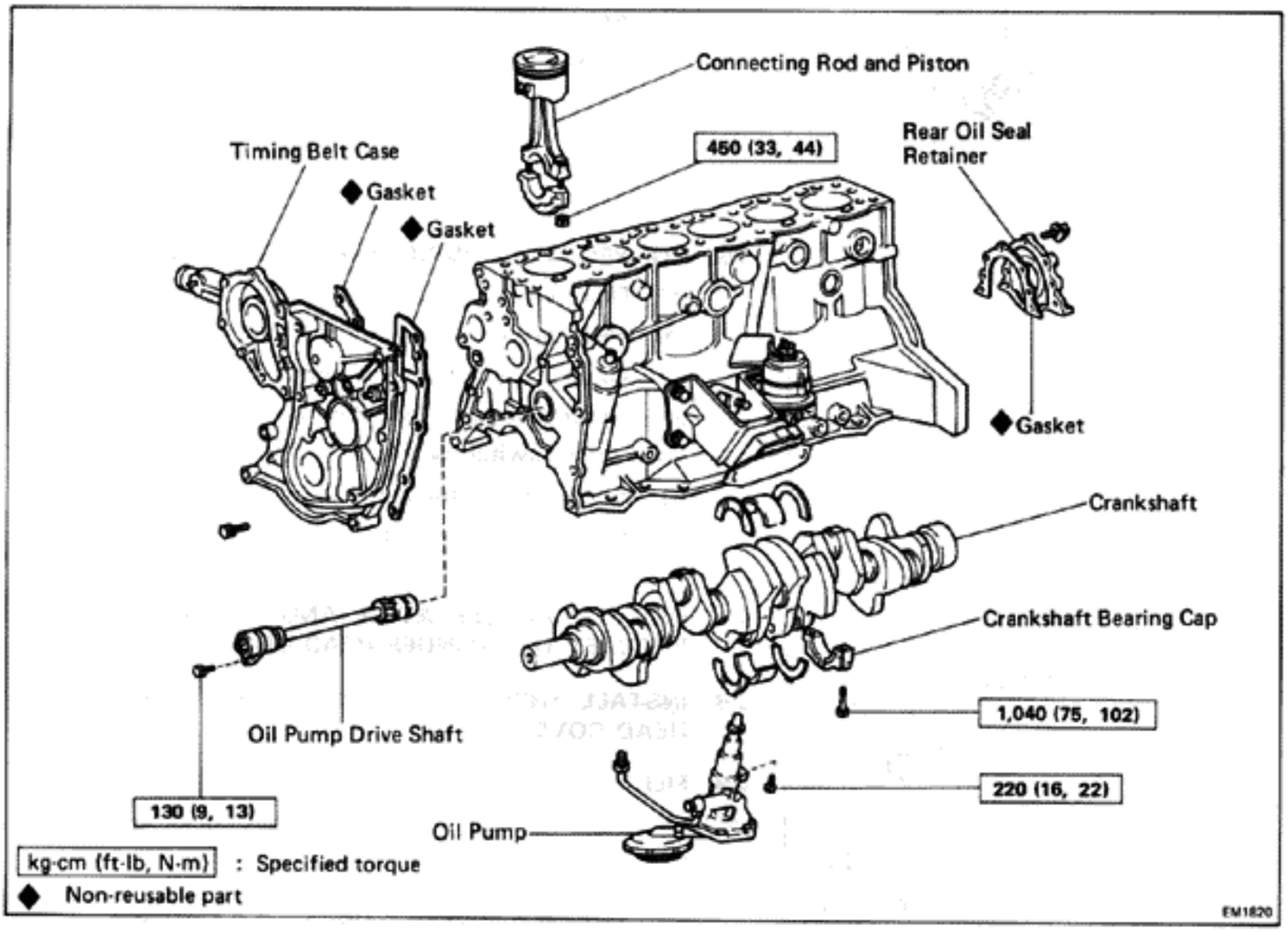

REMOVAL OF ENGINE

1. DRAIN COOLANT FROM RADIATOR AND CYLINDER BLOCK
2. REMOVE HOOD
3. REMOVE BATTERY
4. REMOVE WASHER TANK

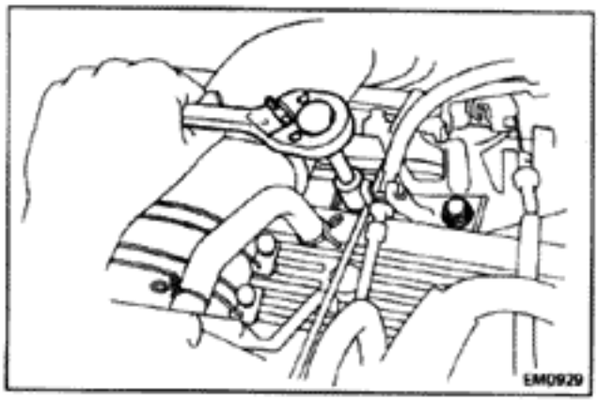

5. REMOVE AIR CLEANER CASE, AIR FLOW METER AND AIR INTAKE CONNECTOR PIPE
6. REMOVE THROTTLE CABLE BRACKET FROM CYLINDER HEAD COVER (for A/T)
7. REMOVE ACCELERATOR AND ACTUATOR CABLE BRACKET FROM CYLINDER HEAD COVER

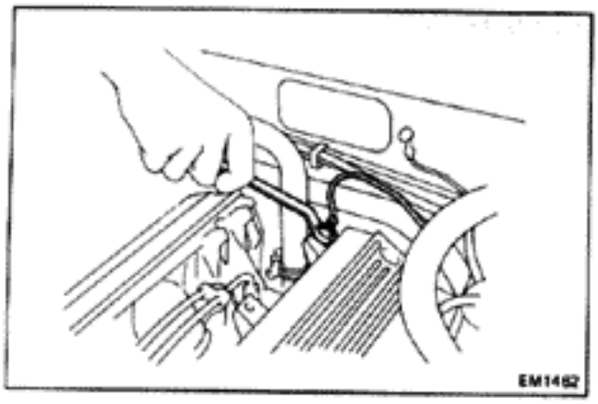

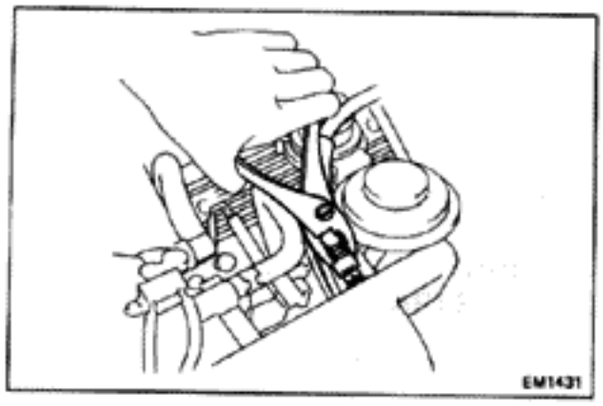



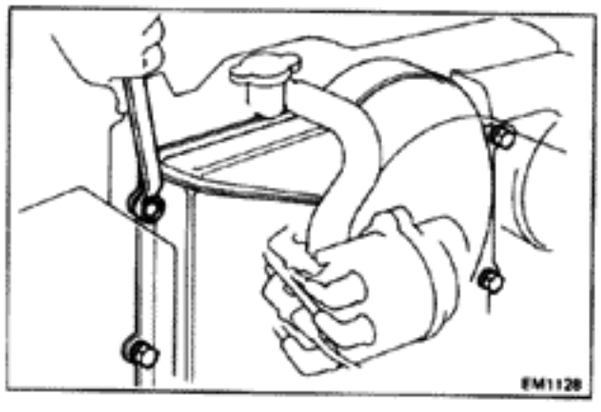

8. DISCONNECT FOLLOWING WIRES AND CABLES:

(a) Ground strap from the cylinder head
(b) Oxygen sensor wire
(c) Oil pressure sending unit wire
(d) Alternator wires
(e) High-tension cord from the ignition coil
(f) Distributor connector
(g) Water temp. sending unit wire
(h) Temp. switch wire (for A/T)
(i) Starter wires
(j) ECT connectors
(k) Solenoid resistor wire connector
(l) Knock sensor wire connector

9. DISCONNECT FOLLOWING HOSES:

(a) Brake booster vacuum hose from the air intake chamber.
(b) Actuator vacuum hose from the air intake chamber (with cruise control system).
(c) EGR valve vacuum hose.

10. DISCONNECT TWO HEATER HOSES

11. DISCONNECT EFI WIRE HARNESS FROM ECU

(a) Remove the glove box.
(b) Remove the computer.
(c) Disconnect the three connectors.
(d) Pull out the EFI wire harness from cowl panel.

12. REMOVE FAN SHROUD AND FLUID COUPLING

(a) Remove the radiator upper hose.
(b) Remove the four shroud bolts and the four coupling set nuts.
(c) Remove the shroud with the coupling.

13. REMOVE ENGINE UNDERCOVER

14. REMOVE RADIATOR

(a) Remove the radiator lower hose.
(b) Disconnect the two oil cooler hoses (for A/T).
(c) Disconnect the coolant reservoir hose.
(d) Remove the two radiator mounting bolts and radiator.

15. REMOVE COOLANT RESERVOIR TANK

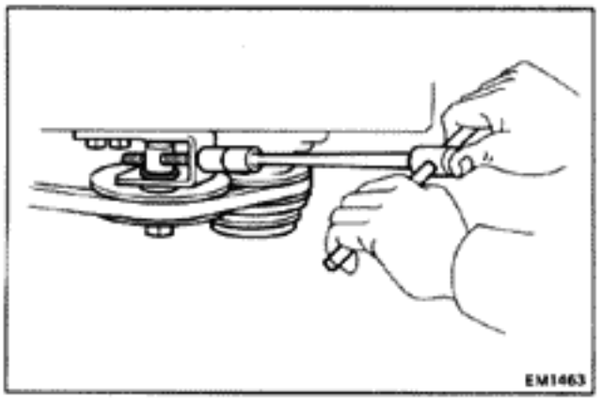

16. REMOVE COMPRESSOR WITH BRACKET FROM CYLINDER BLOCK

(a) Remove the drive belt.

(b) Remove the compressor mounting bolts.

(c) Lay the compressor with bracket to one side without disconnecting the hoses.

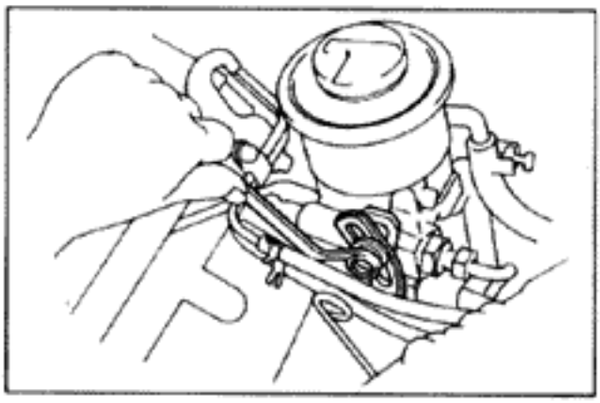

17. REMOVE POWER STEERING PUMP FROM BRACKET

(a) Remove the PS pump pulley with the drive belt.

(b) Remove the three pressure and return line brackets.

(c) Disconnect the pressure and return lines.

(d) Remove the PS pump stay.

(e) Remove the PS pump from bracket.

18. REMOVE ENGINE MOUNTING BOLTS ON EACH SIDE OF ENGINE AND GROUND STRAP

19. REMOVE SHIFT LEVER FROM INSIDE OF VEHICLE (M/T only)

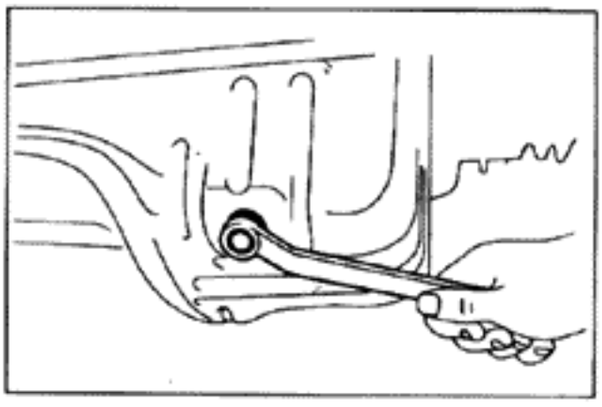

20. RAISE VEHICLE

CAUTION: Be sure the vehicle is securely supported.

21. DRAIN ENGINE OIL

22. DISCONNECT EXHAUST PIPE FROM EXHAUST MANIFOLD

23. REMOVE EXHAUST PIPE CLAMP FROM TRANSMISSION HOUSING

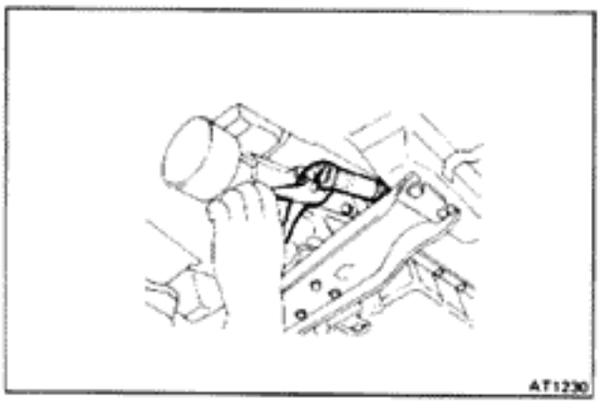

24. REMOVE CLUTCH RELEASE CYLINDER (M/T only)

25. REMOVE SPEEDOMETER CABLE

26. DISCONNECT SHIFT LINKAGE FROM SHIFT LEVER (A/T only)

27. DISCONNECT WIRE FROM BACK-UP LIGHT SWITCH (M/T only)

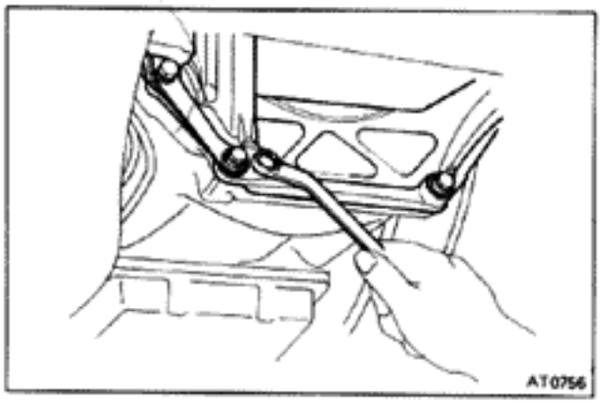

28. REMOVE STIFFENER PLATE WITH GROUND STRAP

29. DISCONNECT FUEL TUBE AND HOSE

(a) Main tube from the fuel filter.

(b) Return hose from the fuel hose support.

CAUTION: Catch leaking fuel in a container and plug the line.

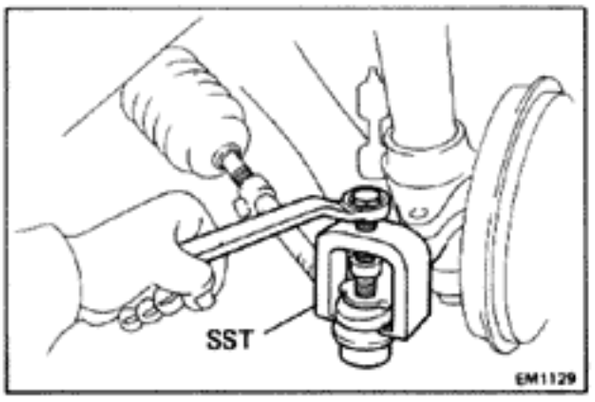

30. REMOVE POWER STEERING GEAR HOUSING

(a) Remove the two lock bolts and remove the sliding yoke.

(b) Remove the cotter pin and nut holding the knuckle arm to the tie rod.

(c) Using SST, disconnect the tie rod end from the knuckle arm.

SST 09611-22012

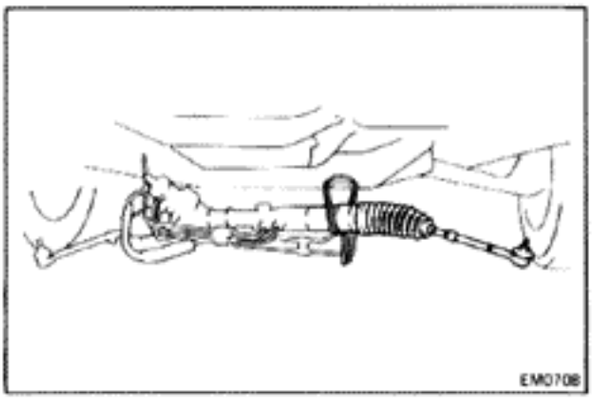

(d) Remove the gear housing brackets.

(e) Remove the gear housing assembly.

(f) Suspend the gear housing with the string or such to protect the pressure and return line.

31. REMOVE INTERMEDIATE SHAFT FROM PROPELLER SHAFT

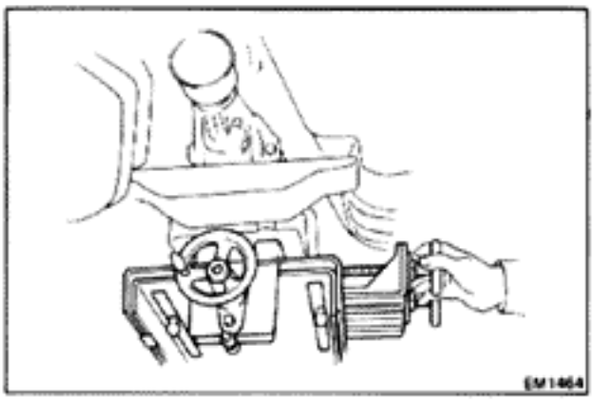

32. PLACE JACK UNDER TRANSMISSION

Be sure to put a wooden block between the jack and the transmission pan to prevent damage.

33. INSTALL A WOODEN BLOCK BETWEEN COWL PANEL AND CYLINDER HEAD REAR END TO PREVENT DAMAGE TO HEATER HOSE

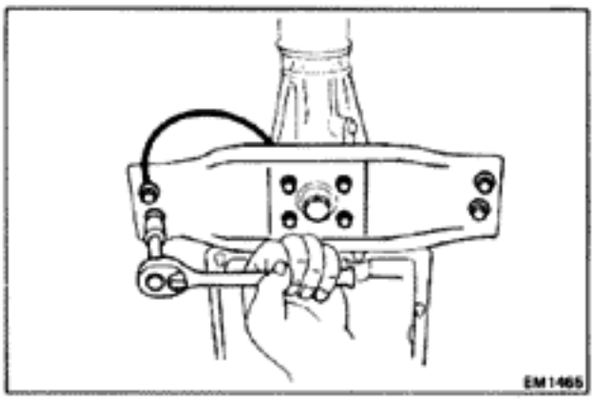

34. REMOVE ENGINE REAR SUPPORT MEMBER WITH GROUND STRAP FROM BODY

35. REMOVE ENGINE WITH TRANSMISSION FROM VEHICLE

(a) Attach the engine hoist chain to the lift brackets of the engine.

(b) Lift the engine out of the vehicle slowly and carefully.

NOTE: Make sure the engine is clear of all wiring and hoses.

36. PLACE ENGINE ONTO ENGINE STAND

37. REMOVE TRANSMISSION FROM ENGINE

(a) Remove the starter.

(b) Remove the exhaust pipe bracket from the engine.

(c) Disconnect the transmission from the engine.

DISASSEMBLY OF CYLINDER BLOCK

(See page EM-38)

1. REMOVE CLUTCH COVER AND DISC
2. REMOVE FLYWHEEL OR DRIVE PLATE AND REAR END PLATE
3. INSTALL ENGINE STAND FOR DISASSEMBLY

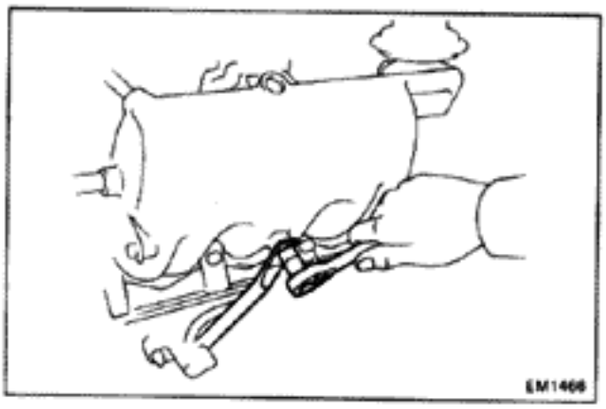

4. REMOVE CYLINDER HEAD ASSEMBLY
   (a) Disconnect the No. 1 water by-pass hose from the water by-pass pipe.
   (b) Disconnect the PCV hose from the cylinder block.
   (c) Remove the timing belt. (See pages EM-11 to 13)
   (d) Remove the No. 2 timing belt cover.
   (e) Remove the air intake chamber stay.

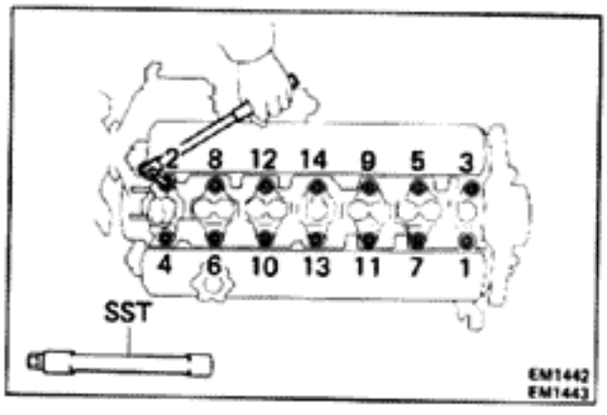

   (f) Using SST, remove the cylinder head bolts.
   SST 09043-38100
   (g) Remove the cylinder head assembly.

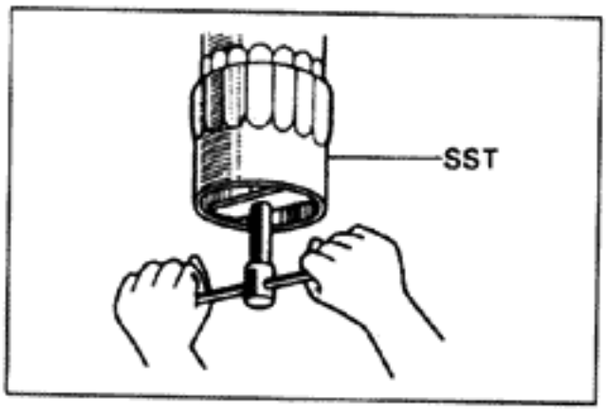

5. REMOVE OIL FILTER
   Using SST, remove the oil filter.
   SST 09228-44010
6. REMOVE OIL LEVEL GAUGE
7. REMOVE ALTERNATOR
8. REMOVE FUEL FILTER
9. REMOVE FUEL HOSE SUPPORT

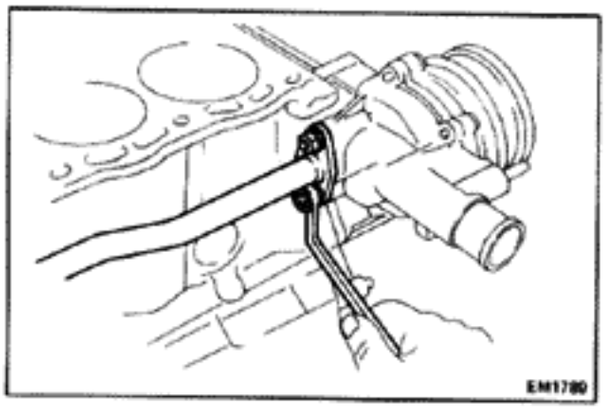

10. REMOVE WATER BY-PASS PIPE
    (a) Remove the two nuts from the timing belt case.
    (b) Remove the three bolts from the cylinder block and remove the water by-pass pipe with gasket.
11. REMOVE OIL PAN
    (See page LU-5)

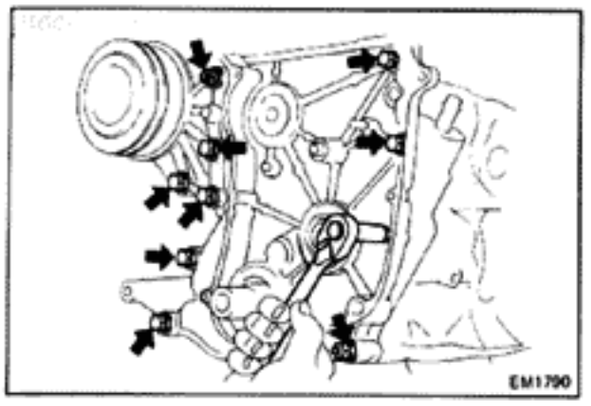

12. REMOVE TIMING BELT CASE WITH WATER PUMP

Remove the eight bolts and two nuts and remove the timing belt case and gaskets.

13. REMOVE REAR OIL SEAL RETAINER

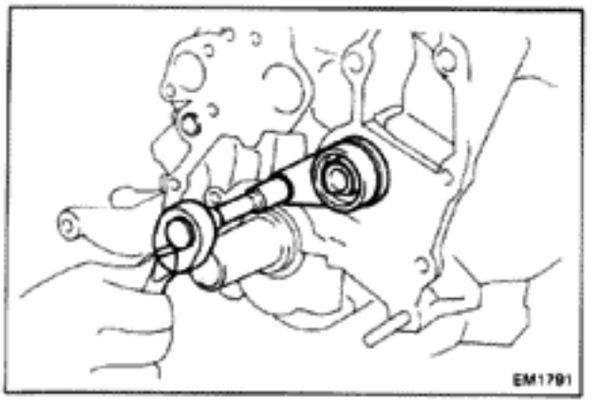

14. REMOVE OIL PUMP DRIVE SHAFT

(a) Remove the bolt holding the oil pump drive shaft.

(b) While turning the oil pump drive shaft, slowly pull it out so as not to damage the bearing.

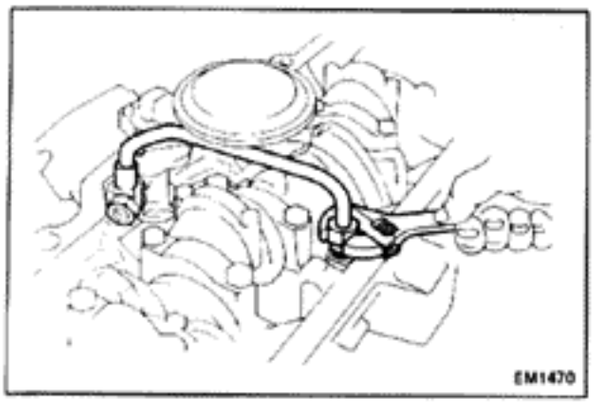

15. REMOVE OIL PUMP ASSEMBLY

(a) Remove the union bolt and nut and remove the oil pump outlet pipe.

(b) Remove bolt holding the oil pump, and remove the oil pump assembly.

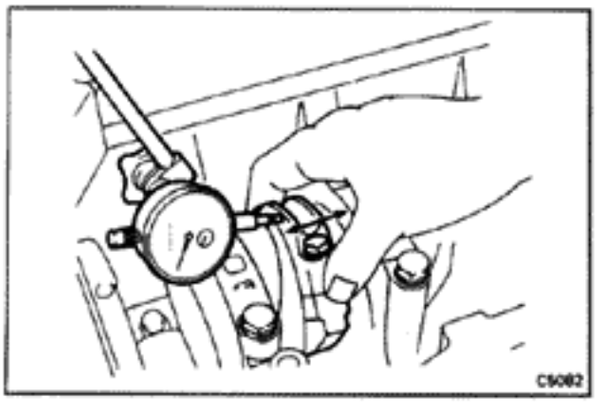

16. MEASURE CONNECTING ROD THRUST CLEARANCE

Using a dial gauge, measure the thrust clearance.

Standard clearance: 0.160 — 0.296 mm (0.0063 — 0.0117 in.)

Maximum clearance: 0.3 mm (0.012 in.)

If clearance is greater than maximum, replace the connecting rod and/or crankshaft.

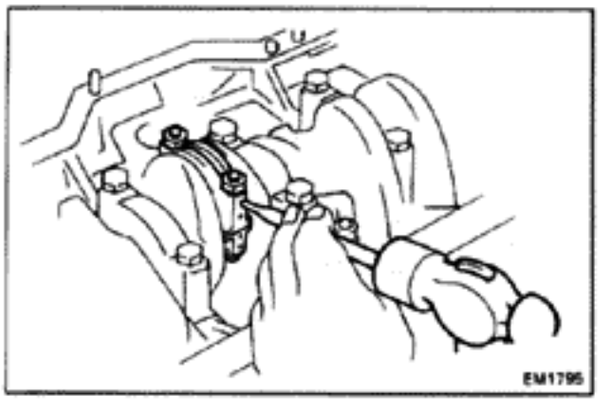

17. REMOVE CONNECTING ROD CAPS AND MEASURE OIL CLEARANCE

(a) Using a punch or numbering stamp, mark the connecting rods and caps to ensure correct reassembly.

(b) Remove the rod caps.

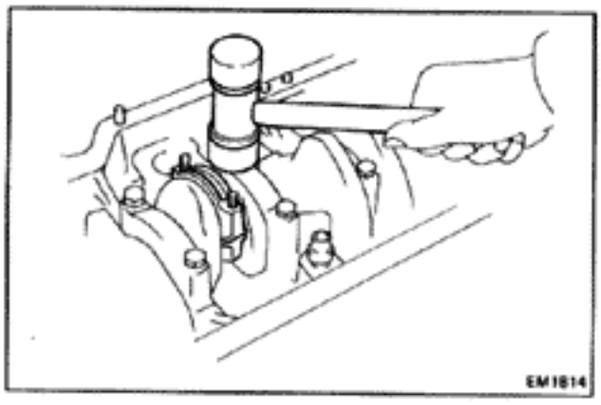

(c) Using a plastic-faced hammer, tap the rod bolts lightly and lift off the rod cap.

NOTE: Keep the bearing inserted with the cap.

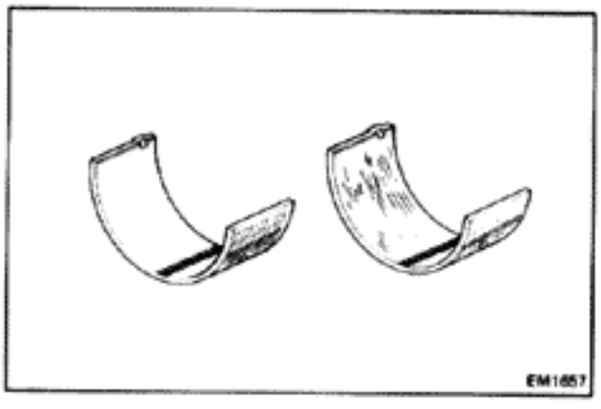

(d) Clean the bearings and crankshaft pins.

(e) Inspect each bearing for pitting and radial scratches.

If bearings are damaged, replace the bearings.

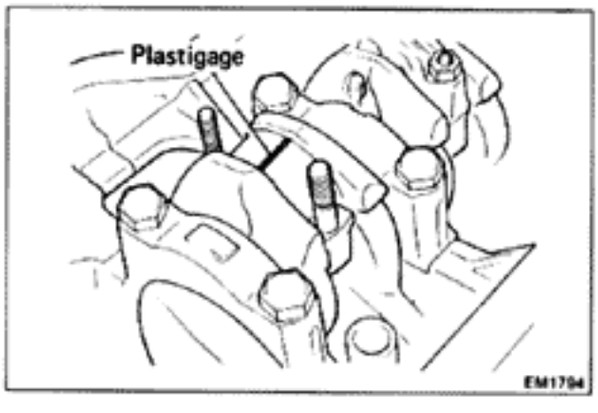

(f) Lay a strip of plastigage across the crankshaft pin.

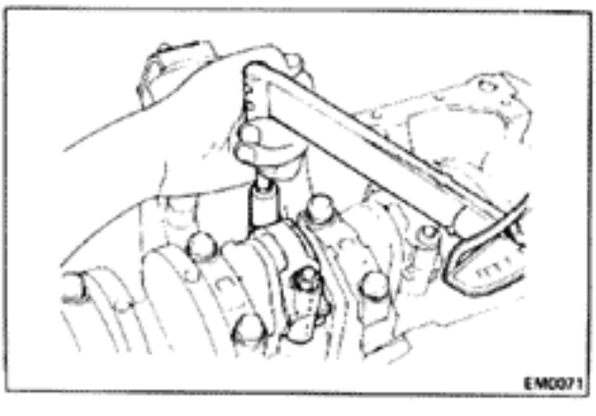

(g) Align the rod and cap marks and fit on the cap. Torque the rod cap nuts.

Torque: 450 kg-cm (33 ft-lb, 44 N·m)

NOTE: Do not turn the crankshaft.

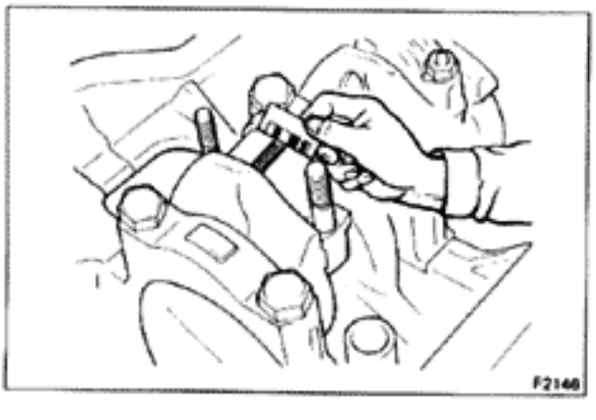

(h) Remove the rod cap.

(i) Measure the plastigage at its widest point.

Standard clearance: 0.021 — 0.053 mm (0.0008 — 0.0021 in.)

Maximum clearance: 0.08 mm (0.0031 in.)

If the clearance is greater than maximum, replace the bearings and/or grind the crank pins.

Under size bearing: U/S 0.25, 0.50

(j) Clean out any plastigage scraps from the bearing and crankshaft pin.

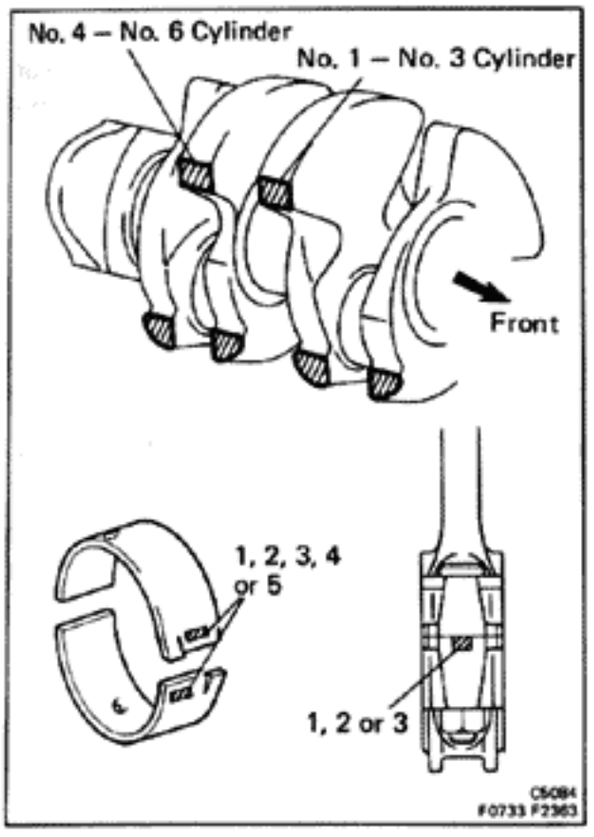

NOTE: If replacing a standard size bearing with a standard oil clearance, replace with one having the same number. If the number of the bearing cannot be determined, select a bearing from the table below according to the numbers imprinted on the connecting rod cap and crankshaft.

Rod cap	No.	1	1	2	1	2	3	2	3	3
Crankshaft	No.	0	1	0	2	1	0	2	1	2
Bearing	No.	1	2	2	3	3	3	4	4	5

Example: Rod cap No. 2, Crankshaft No. 1 = Bearing No. 3

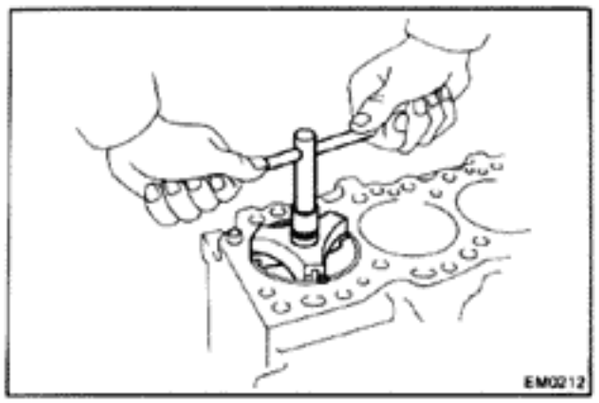

18. PUSH OUT PISTON AND CONNECTING ROD ASSEMBLY

(a) Remove all the carbon from top of the bore to the top of the cylinder.

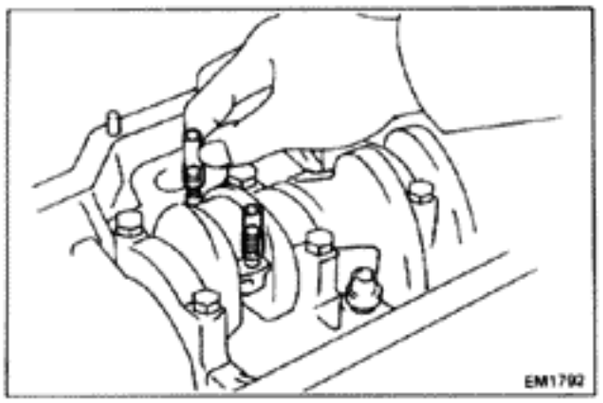

(b) Cover the rod bolts with a short piece of hose to protect the crank pin from damage.

(c) Push the piston and connecting rod assembly out through the top of the cylinder block.

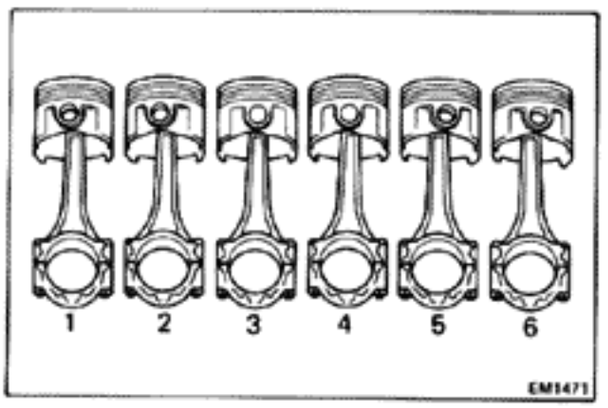

(d) Arrange the pistons and connecting rod caps in order.

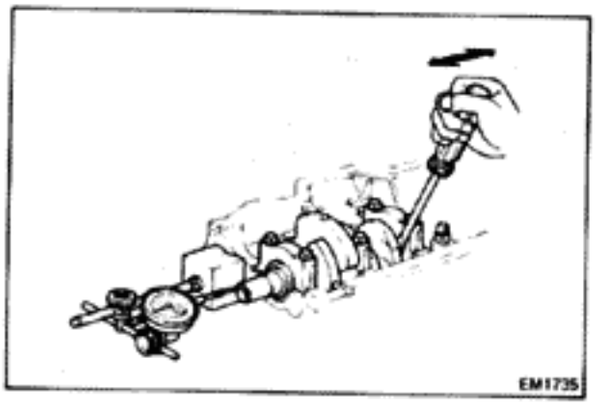

19. MEASURE CRANKSHAFT THRUST CLEARANCE

Install a dial gauge and measure the crankshaft thrust clearance while prying the crankshaft back and forth with a screwdriver.

Standard clearance:	**0.05 — 0.25 mm (0.0020 — 0.0098 in.)**
Maximum clearance:	**0.3 mm (0.012 in.)**
Oversized thrust washer:	**O/S 0.125, 0.25**

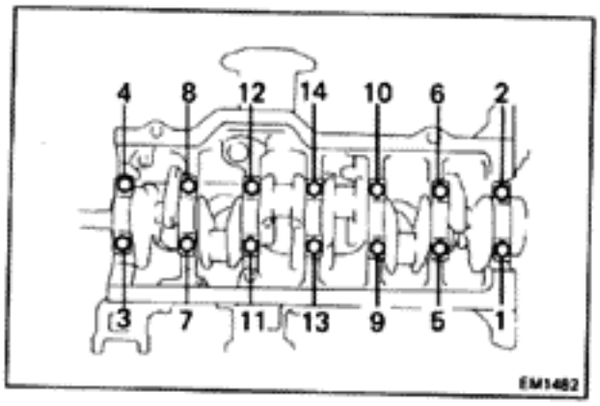

20. REMOVE MAIN BEARING CAPS AND MEASURE OIL CLEARANCE

(a) Gradually loosen and remove the bearing cap bolts in three passes and in the numerical order shown.

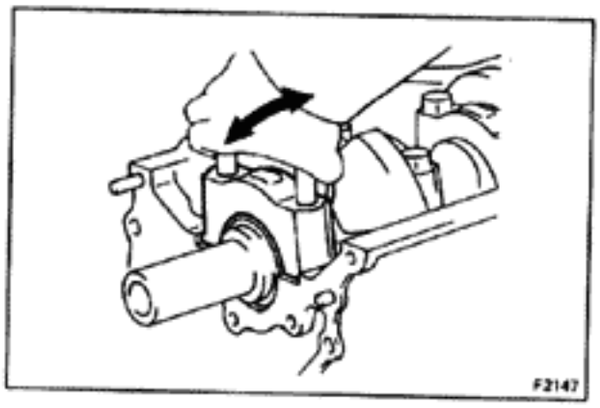

(b) Using the removed bearing cap bolts, pry the bearing cap fore and aft, and remove it with the lower bearing and thrust washers (No. 4 journal only).

NOTE:
- Keep the lower bearing inserted with the cap.
- Arrange the caps and lower thrust washers in correct order.

(c) Lift off the crankshaft.

NOTE: Keep the upper bearings and upper thrust washers (for the No. 4 journal only) inserted in the cylinder block.

(d) Clean the journals and bearings.

(e) Check the journals and bearings for pitting and scratches.

If the journal or bearing is damaged, grind or replace the crankshaft and replace the bearing.

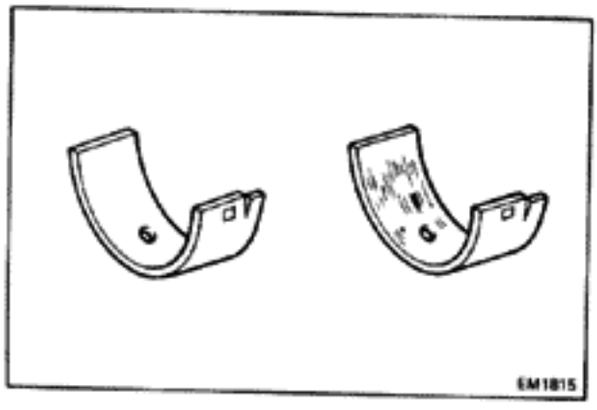

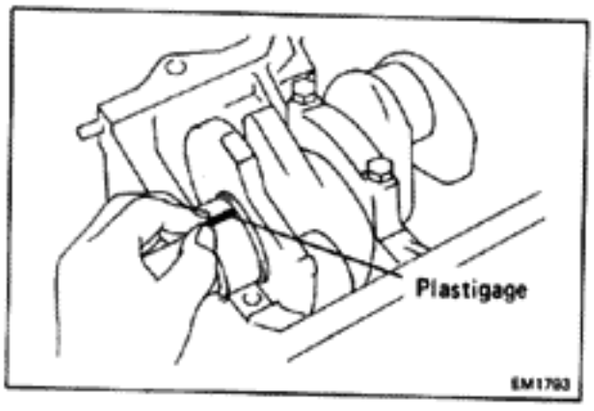

(f) Install the upper main bearing on the cylinder block and crankshaft.

(g) Lay a strip of plastigage across the main journals.

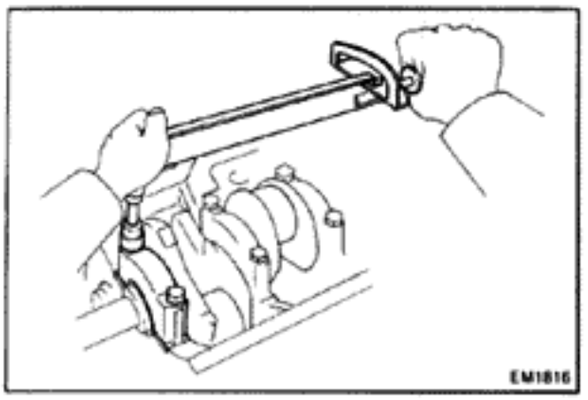

(h) Install the main bearing caps. Torque the cap bolts.

Torque: 1,040 kg-cm (75 ft-lb, 102 N·m)

NOTE: Do not turn crankshaft.

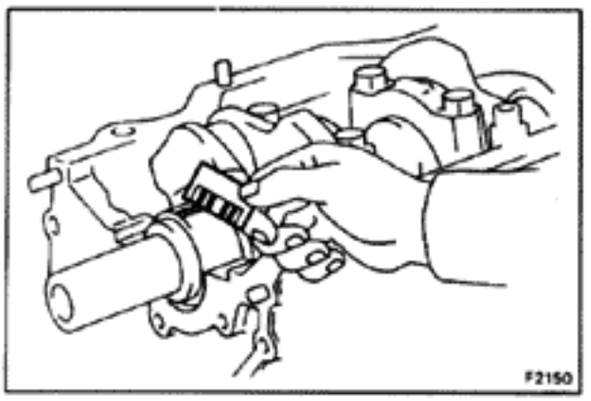

(i) Remove the main bearing caps.

(j) Measure the plastigauge at its widest point.

Standard clearance: 0.034 — 0.058 mm (0.0013 — 0.0023 in.)

Maximum clearance: 0.08 mm (0.0031 in.)

If the clearance is greater than maximum, replace the bearings and/or grind the main journals.

Undersized bearing: U/S 0.25, 0.50

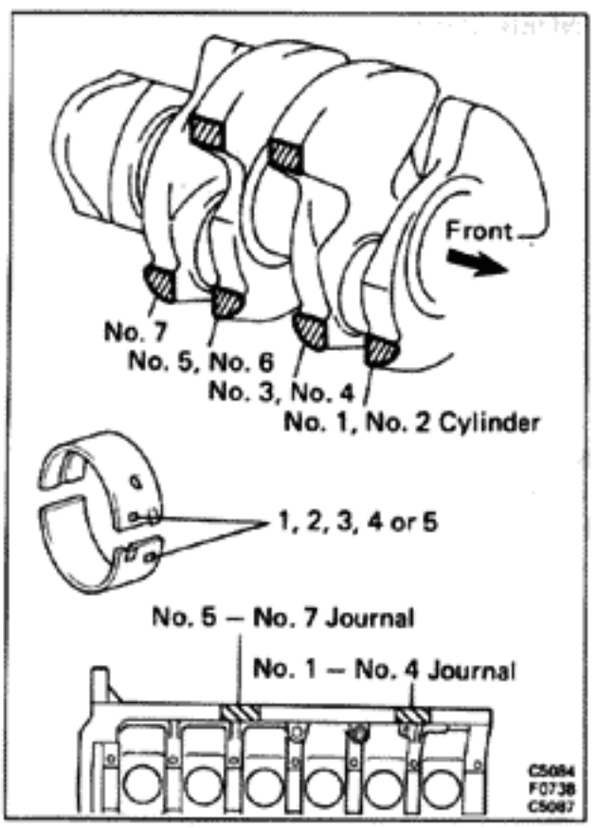

NOTE: If replacing a standard size bearing with a standard oil clearance, replace with one having the same number. If the number of the bearing cannot be determined, select a bearing from the table below according to the numbers imprinted on the cylinder block and crankshaft.

Cylinder Block No.	1	2	1	3	2	1	3	2	3
Crankshaft No.	0	0	1	0	1	2	1	2	2
Bearing No.	1	2	2	3	3	3	4	4	5

Example: Cylinder Block No. 2, Crankshaft No. 1 = Bearing No. 3

21. REMOVE CRANKSHAFT

(a) Lift out the crankshaft.

(b) Remove the upper main bearings from the cylinder block.

(c) Clean out any plastigage scraps from the bearing and journals.

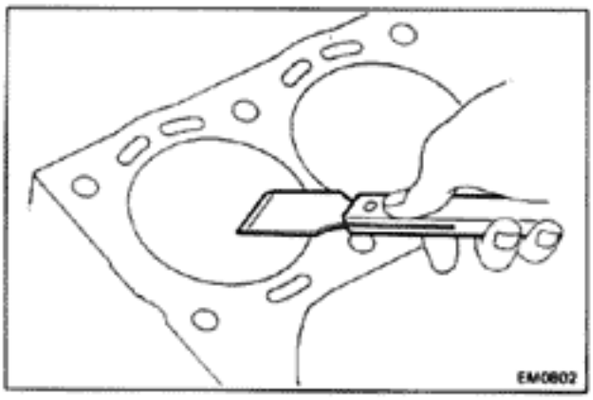

INSPECTION OF CYLINDER BLOCK

1. REMOVE GASKET MATERIAL

Using a gasket scraper, remove all gasket material from the cylinder block surfaces.

2. CLEAN CYLINDER BLOCK

Using a soft brush and solvent, clean the block.

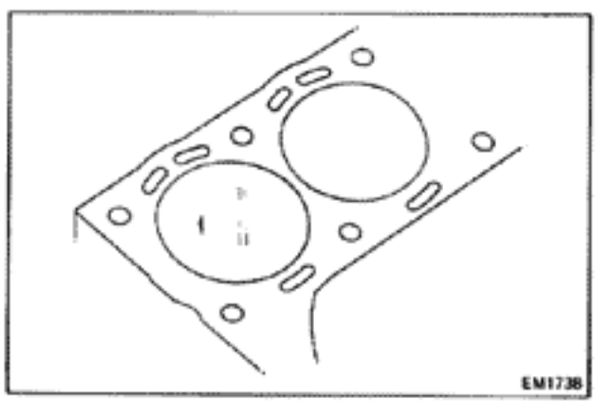

3. INSPECT CYLINDERS

Visually inspect cylinders for vertical scratches. If deep scratches are present, rebore all six cylinders. (See page EM-50)

4. INSPECT CYLINDER BLOCK WARPAGE

Warpage: Limit 0.05 mm (0.0020 in.)

If warpage is greater than the specified value, replace the cylinder block.

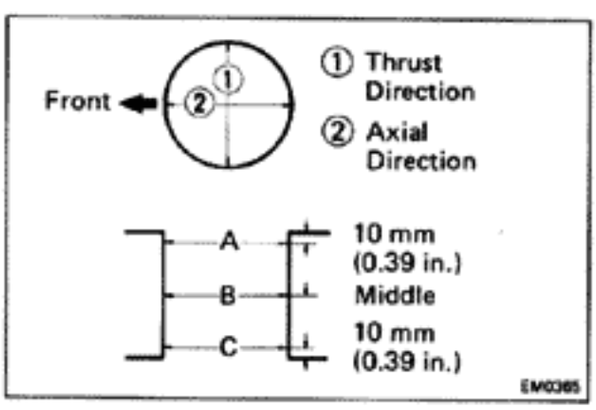

5. MEASURE CYLINDER BORE

Using a cylinder micrometer, measure the cylinder bore at positions A, B and C in the thrust and axial directions.

If any of the following measurements are not within the specification, rebore the cylinder. (See page EM-50)

(a) Cylinder diameter is greater than the maximum permissible limit.

On standard sized piston
Maximum diameter: 83.25 mm (3.2776 in.)
On oversized piston (O/S 0.50)
Maximum diameter: 83.75 mm (3.2972 in.)
On oversized piston (O/S 0.75)
Maximum diameter: 84.00 mm (3.3071 in.)
On oversized piston (O/S 1.00)
Maximum diameter: 84.25 mm (3.3169 in.)

(b) If the difference between measurements A, B and C is greater than the taper limit, rebore the cylinder. (See page EM-50)

Taper limit: 0.02 mm (0.0008 in.)

(c) If the difference between thrust and axial measurements is greater than the out-of-round limit, rebore the cylinder. (See page EM-50)

Out-of-round limit: 0.02 mm (0.0008 in.)

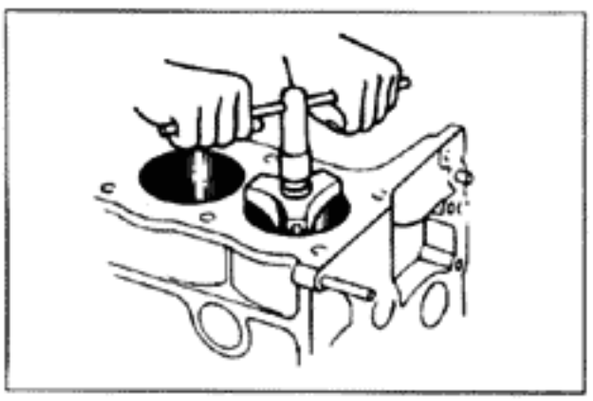

6. REMOVE CYLINDER RIDGE

If wear is less than 0.2 mm (0.008 in.), use a ridge reamer to machine the piston ring ridge at the top of the cylinder.

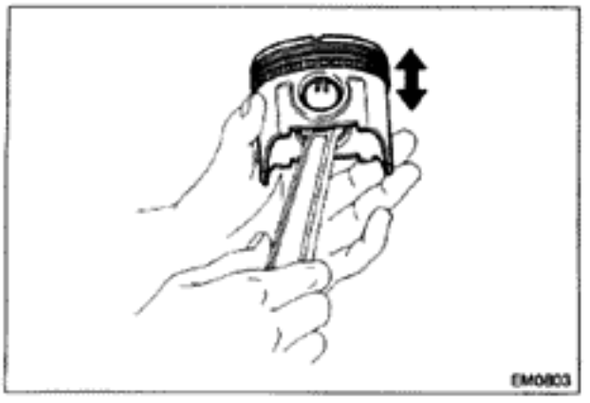

DISASSEMBLY OF PISTON AND CONNECTING ROD ASSEMBLY

1. CHECK FIT BETWEEN PISTON AND PIN

Try to move the piston back and forth on the piston pin. If any movement is felt, replace the piston and pin.

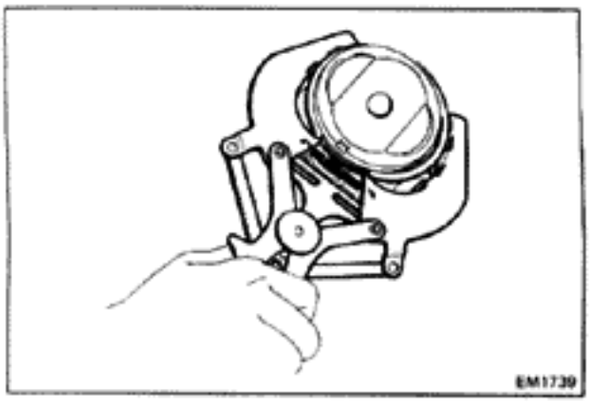

2. REMOVE PISTON RINGS

Using a piston ring expander, remove the piston rings. Keep the rings for each cylinder separated.

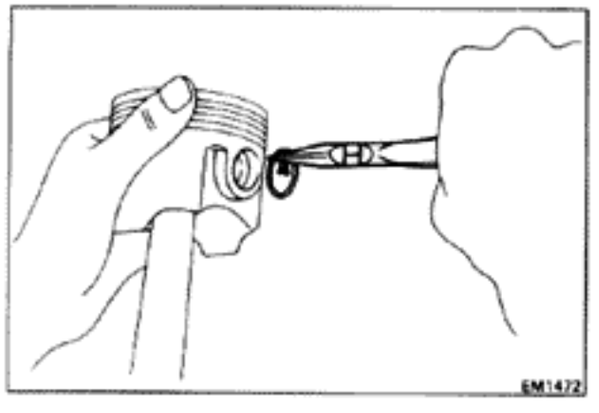

3. DISCONNECT CONNECTING ROD FROM PISTON

(a) Using needle-nose pliers, remove the snap rings from the piston.

(b) Heat the piston in hot water to approx. 60°C (140°F).

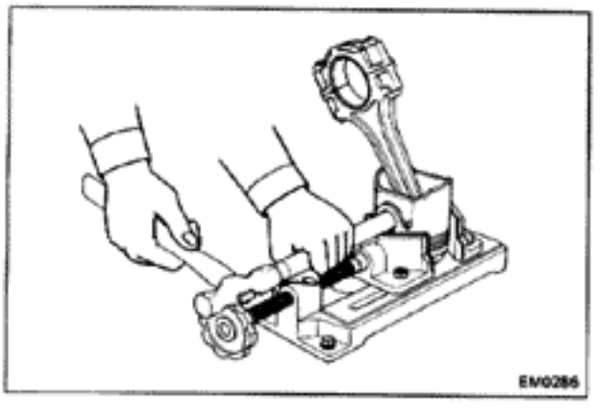

(c) Using a plastic-faced hammer and driver, tap the pin lightly to remove the pin from the piston.

NOTE:

- The piston and pin are a matched set.
- Keep the piston, piston pin and rings and connecting rod together for each cylinder.

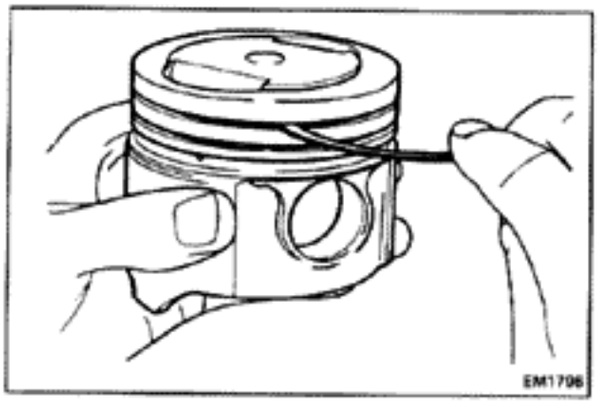

INSPECTION OF PISTON AND CONNECTING ROD ASSEMBLY

1. CLEAN PISTON

(a) Scrape any carbon from the piston top.

(b) Using a grooved cleaning tool or broken ring, clean the ring grooves.

(c) Using a brush and solvent, clean the piston thoroughly.

CAUTION: Do not use a wire brush.

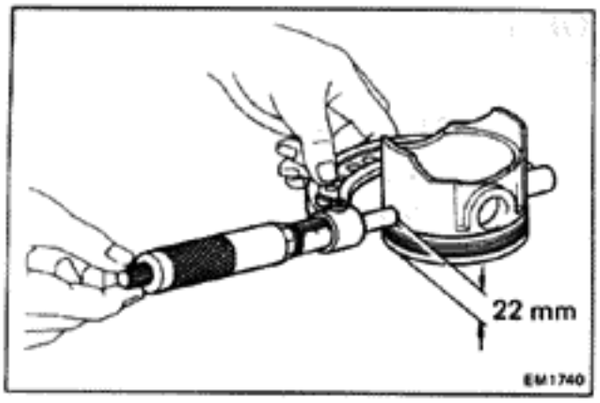

2. MEASURE PISTON DIAMETER

(a) Using a micrometer, measure the piston diameter at right angles to the piston pin center line, 22 mm (0.87 in.) from the piston head.

Standard diameter: 82.93 — 82.98 mm (3.2650 — 3.2669 in.)

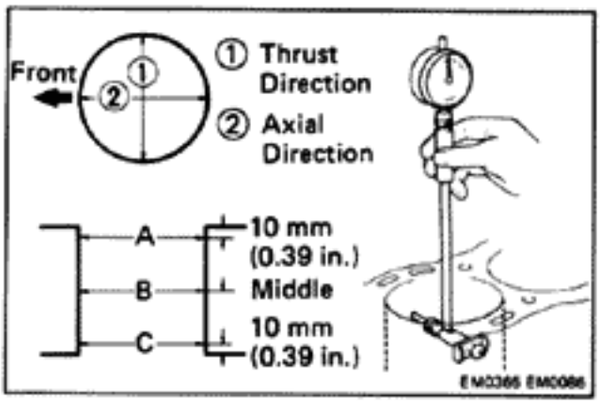

(b) Check that the difference between the cylinder diameter and the piston diameter is within specification. (See step 5 on page EM-48)

Piston clearance: 0.06 — 0.08 mm (0.0024 — 0.0031 in.)

If not wuthin specification, replace the piston and/or rebore all six cylinders. (See page EM-52)

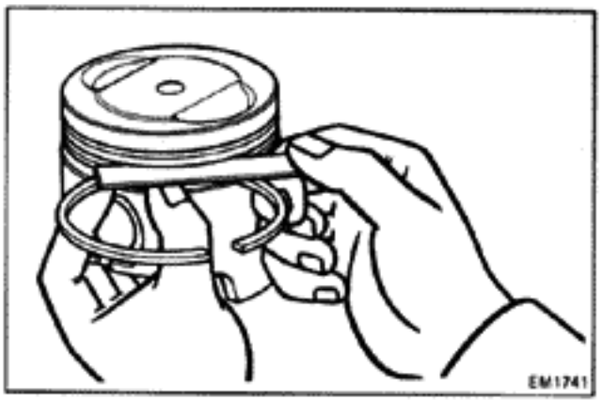

3. MEASURE CLEARANCE BETWEEN PISTON RING GROOVE AND PISTON RING

Using a feeler gauge, measure the clearance between the piston ring and the ring land.

Ring groove clearance: No. 1 0.03 — 0.07 mm (0.0012 — 0.0028 in.)
No. 2 0.02 — 0.06 mm (0.0008 — 0.0024 in.)

If the clearance is greater than maximum, replace the piston ring and if necessary, the piston

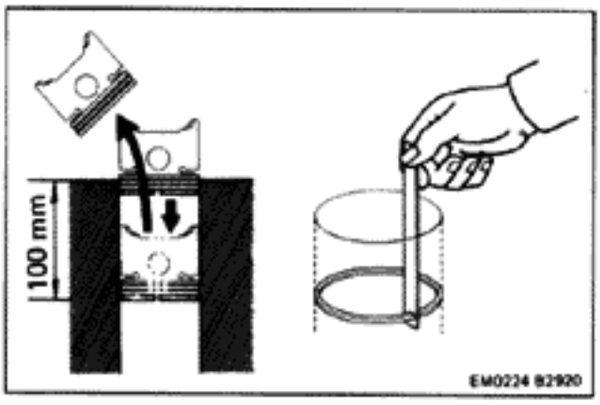

4. MEASURE RING END GAP

(a) Insert the piston ring into the cylinder bore.

(b) Using a piston, push the piston ring a little beyond the bottom of the ring travel.
[100 mm (3.94 in.) from top surfage of cylinder block]

(c) Using a feeler gauge, measure the end gap.

Ring end gap:

No. 1	**STD**	**0.29—0.47 mm (0.0114—0.0185 in.)**
	Limit	**0.71mm (0.00280 in.)**
No. 2	**STD**	**0.25—0.55 mm (0.0098—0.0217 in.)**
	Limit	**1.15 mm (0.0453 in.)**
Oil	**STD**	**0.17—0.85 mm (0.0067—0.0335 in.)**
	Limit	**1.45 mm (0.0571 in.)**

If not within specification, replace the ring.
Do not file the ring end.



5. CHECK PISTON PIN FIT

At 60°C (140°F), the pin should be able to be pushed into the piston with your thumb.

If the pin can be installed at a lower temperature, replace the piston and pin.

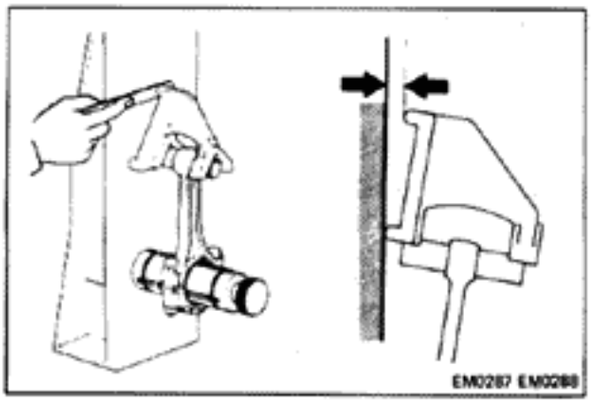

6. INSPECT CONNECTING RODS

(a) Using a rod aligner, check the connecting rod alignment.

- Check that the rod is not bent.

Bend limit:
0.05 mm (0.0020 in.) per 100 mm (3.94 in.)

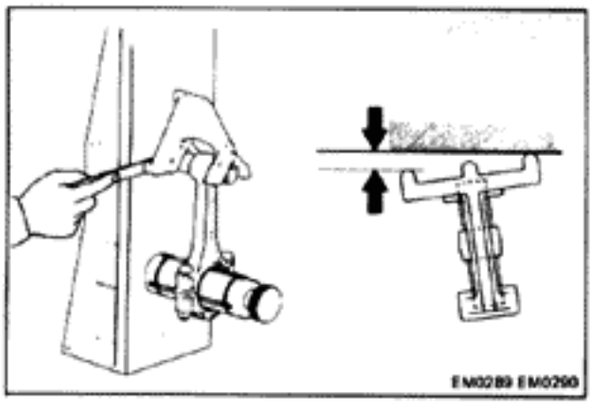

- Check that the rod is not twisted.

Twist limit:
0.15 mm (0.0059 in.) per 100 mm (3.94 in.)

If the rod is bent or twisted, replace the connecting rod.

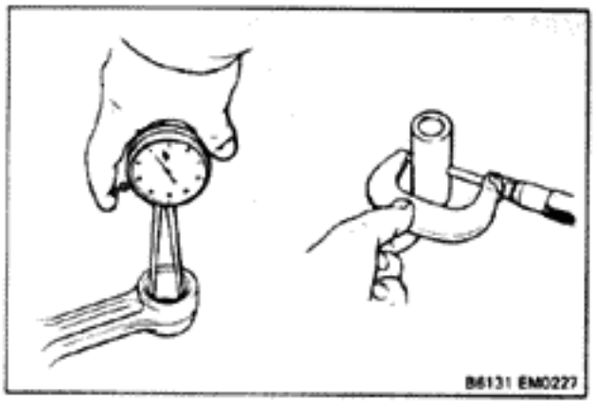

(b) Measure the oil clearance between the rod bushing and piston pin.

- Using an inside dial indicator, measure the inside diameter of the rod bushing.
- Using a micrometer, measure the diameter of the piston pin.
- Check that the difference between the measurements is less than the oil clearance limit.

Standard oil clearance: 0.005 — 0.011 mm (0.0002 — 0.0004 in.)
Maximum oil clearance: 0.015 mm (0.0006 in.)

If the clearance is greater than maximum, replace the rod busing.

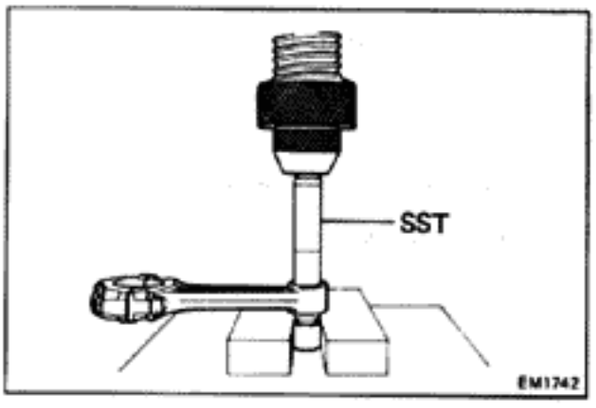

REPLACEMENT OF ROD BUSHING

1. REMOVE ROD BUSHING

Using SST, remove the rod bushing from the connecting rod.

SST 09222-30010

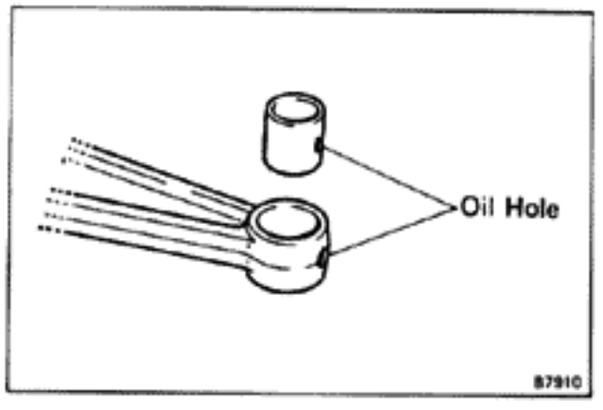

2. INSTALL NEW ROD BUSHING

Using SST, install the rod bushing to the connecting rod.

SST 09222-30010

NOTE: Align the bushing oil hole with the connecting rod oil hole.

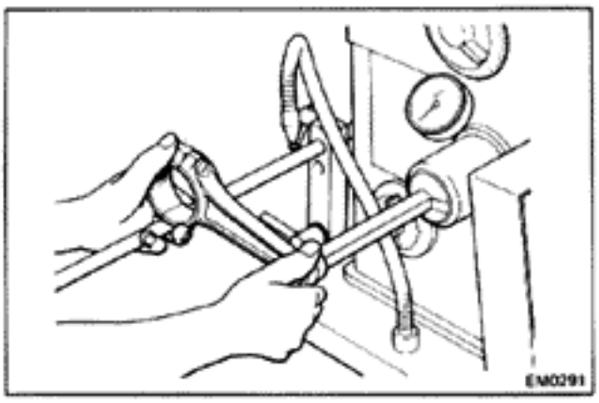

3. HONE NEW BUSHING AND CHECK PIN FIT IN CONNECTING ROD

(a) Hone the new bushing and check that the oil clearance is within the standard specification.

Standard oil clearance: 0.005 — 0.011 mm (0.0002 — 0.0004 in.)

(b) Check the pin fit at normal room temperature. Coat the pin with engine oil and push the pin into the rod with thumb pressure.

BORING OF CYLINDERS

1. SELECT OVERSIZED PISTON

Size	Outside diameter mm (in.)
O/S 0.50	83.43 — 83.48 (3.2846 — 3.2866)
O/S 0.75	83.68 — 83.73 (3.2945 — 3.2965)
O/S 1.00	83.93 — 83.98 (3.3043 — 3.3063)

O/S pistons with pins are available in the sizes listed. Replace pistons in matched sets. Take the largest bore measured and select the oversized piston for that bore. Bore all cylinders for the oversized piston selected.

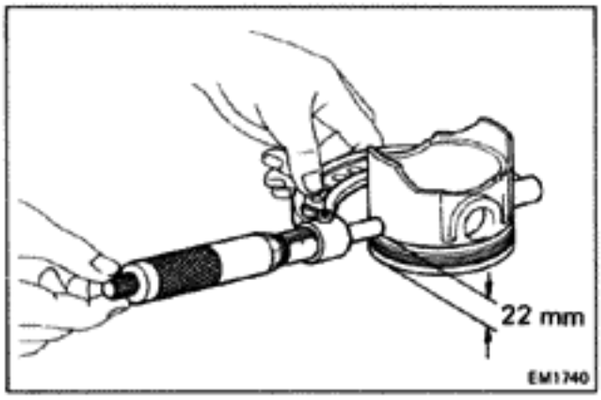

2. CALCULATE DIMENSION TO BORE CYLINDERS

(a) Using a micrometer, measure the piston diameter at right angles to the piston pin center line, 22 mm (0.87 in.) from the piston head.

(b) Calculate the size each cylinder is to be rebored as follows:

Size to be rebored = P + C — H

P = piston diameter

C = piston clearance
0.06 — 0.08 mm (0.0024 — 0.0031 in.)

H = allowance for honing
Less than 0.02 mm (0.0008 in.)

3. BORE AND HONE CYLINDERS TO CALCULATED DIMENSIONS

Honing amount: 0.02 mm (0.0008 in.) maximum

CAUTION: Excess honing will destroy the finished roundness.

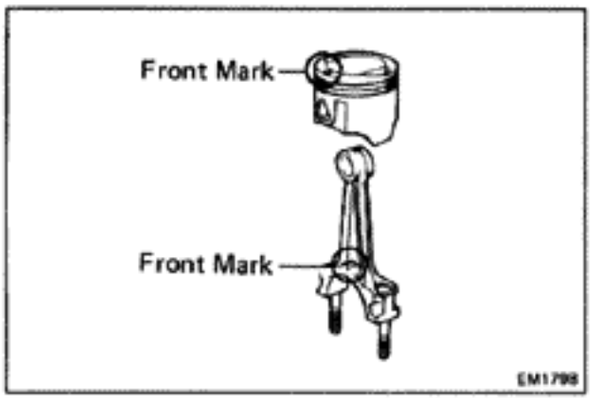

ASSEMBLY OF PISTON AND CONNECTING ROD ASSEMBLY

1. ASSEMBLE PISTON AND CONNECTING ROD

(a) Install a new snap ring on one side of the piston pin hole.

(b) Heat the piston in hot water to approx. 60°C (140°F).

(c) Align the notch on the piston with the mark on the rod and push the piston pin in with your thumb.

(d) Install a new snap ring on the other side of the pin.

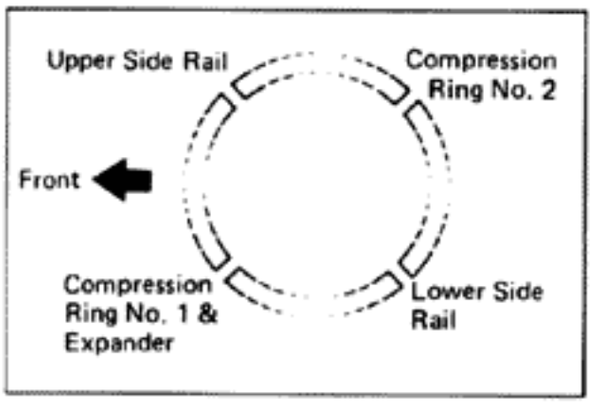

2. PLACE RINGS ON PISTON

(a) Using a ring expander, install the top two compression rings with the code marks facing up.

(b) Position the piston rings so that the ring end gaps are in the shaded area as shown.

CAUTION: Do not align the end gaps.

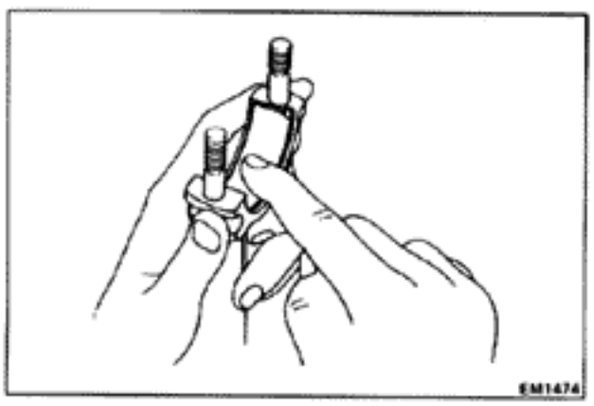

3. INSTALL BEARINGS

(a) Install the bearings in the connecting rods and rod caps.

(b) Lubricate the face of the bearings with engine oil.

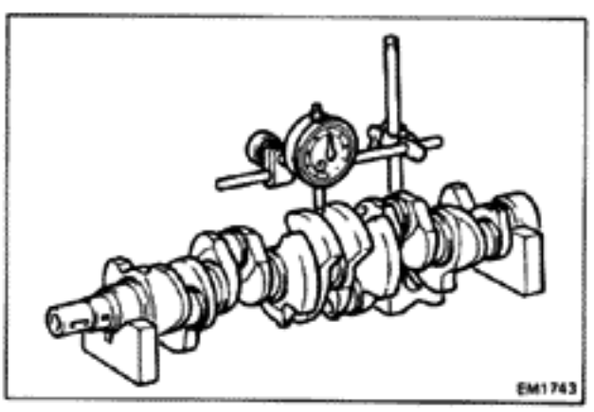

INSPECTION AND REPAIR OF CRANKSHAFT

1. MEASURE CRANKSHAFT

(a) Place the crankshaft on V-blocks.

(b) Using a runout gauge, measure the circle runout at the center journal.

Maximum circle runout: 0.06 mm (0.0024 in.)

If the runout is grerater than maximum, replace the crankshaft.

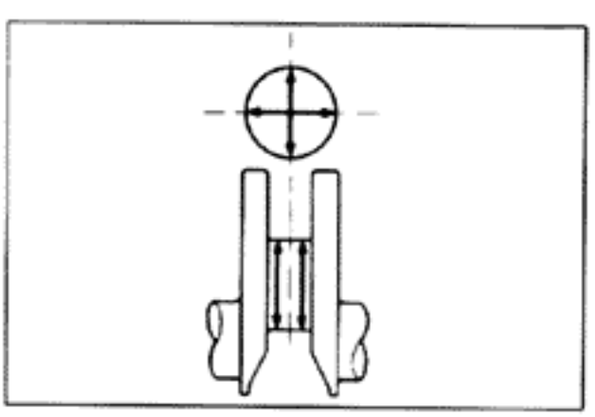

(c) Using a micrometer, check the diameter of the main and crank pin journal.

Measure the journals for out-of-round and taper as shown.

Main journal diameter: 59.988 — 60.012 mm (2.3617 — 2.3627 in.)

Crank pin diameter: 51.976 — 52.000 mm (2.0463 — 2.0472 in.)

Taper and out-of-round limit: 0.02 mm (0.0008 in.)

If journals are worn, regrind or replace the crankshaft.

2. GRIND CRANK PIN AND/OR MAIN JOURNAL IF NECESSARY

Grind the crank pins and/or main journals to the undersized finished diameter.
Install a new pin and/or main undersize bearings.

Bearing size (U/S 0.25, 0.50)

Main journal finished diameter:
U/S 0.25 59.730 — 59.740 mm (2.3516 — 2.3520 in.)
U/S 0.50 59.480 — 59.490 mm (2.3417 — 2.3421 in.)

Crank pin finished diameter:
U/S 0.25 51.725 — 51.735 mm (2.0364 — 2.0368 in.)
U/S 0.50 51.475 — 51.485 mm (2.0266 — 2.0270 in.)

Taper and out-of-round limit: 0.02 mm (0.0008 in.)

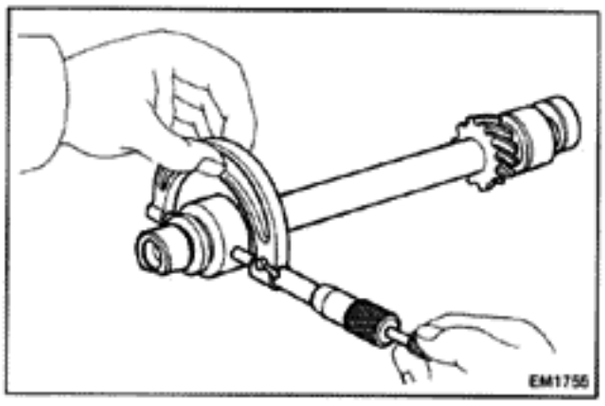

INSPECTION AND REPAIR OF OIL PUMP DRIVE SHAFT COMPONENTS

1. INSPECT OIL PUMP DRIVE SHAFT

(a) Using a micrometer, measure the journal diameter.

Standard journal diameter:
Front 40.959 — 40.975 mm (1.6126 — 1.6132 in.)
Rear 32.959 — 32.975 mm (1.2976 — 1.2982 in.)

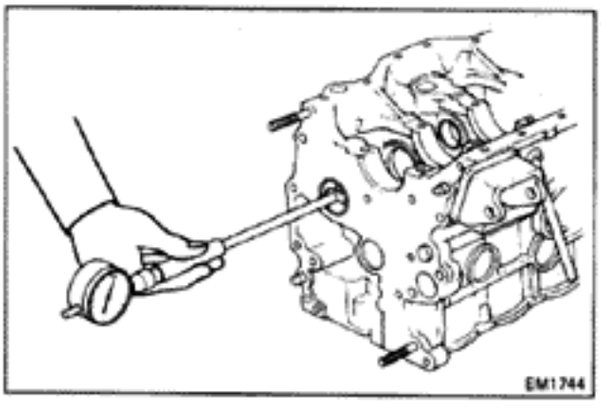

(b) Using a cylinder micrometer, measure the bearing bore.

(c) Subtract the journal diameter measurement from the bearing bore measurement.

Standard oil clearance: 0.025 — 0.066 mm (0.0010 — 0.0026 in.)
Maximum oil clearance: 0.08 mm (0.0031 in.)

If the clearance is greater than maximum, replace the bearing and/or drive shaft.

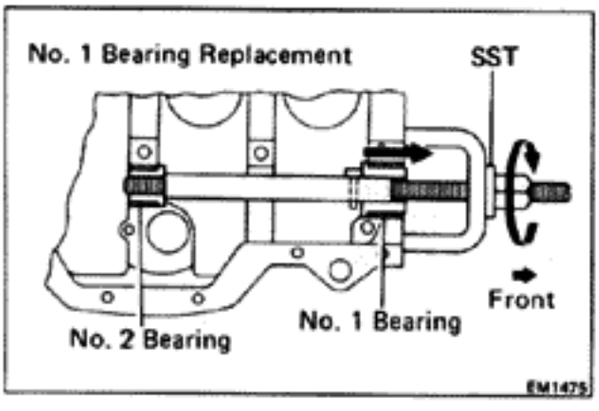

2. IF NECESSARY, REPLACE DRIVE SHAFT BEARING

(a) Using SST, replace the No. 1 bearing, using the No. 2 bearing as a guide.

SST 09215-00100 (09215-00120, 09215-00150, 09215-00160, 09215-00210, 09215-00220)

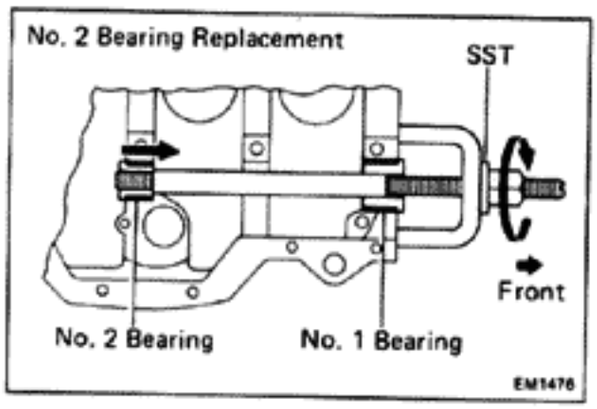

(b) Using SST, replace the No. 2 bearing, using the No. 1 bearing as a guide.

SST 09215-00100 (09215-00120, 09215-00150, 09215-00160, 09215-00210, 09215-00220)

CAUTION: When inserting the bearings, align each oil hole.

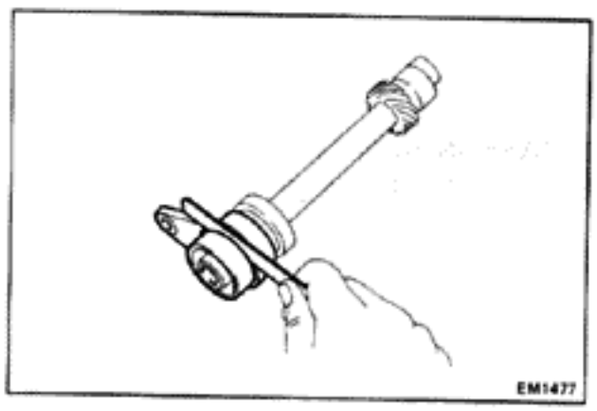

3. INSPECT OIL PUMP DRIVE SHAFT THRUST CLEARANCE

Using a feeler gauge, measure the drive shaft thrust clearance between the thrust plate and collar.

Standard thrust clearance: 0.06 – 0.13 mm (0.0024 – 0.0051 in.)

Maximum thrust clearance: 0.3 mm (0.012 in.)

If clearance is greater than maximum, replace the thrust plate and/or collar.

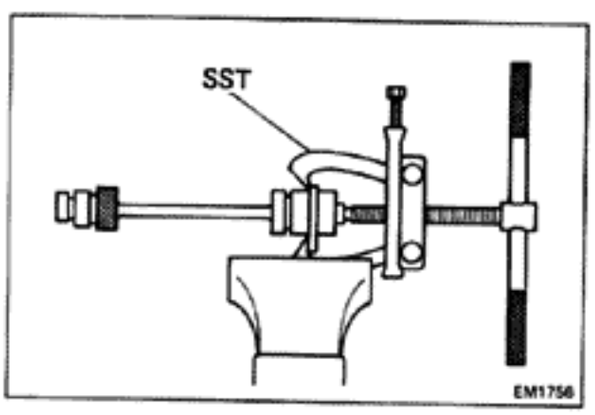

4. IF NECESSARY, REPLACE THRUST PLATE AND COLLAR

(a) Using SST, remove the thrust plate and collar.

SST 09950-20016

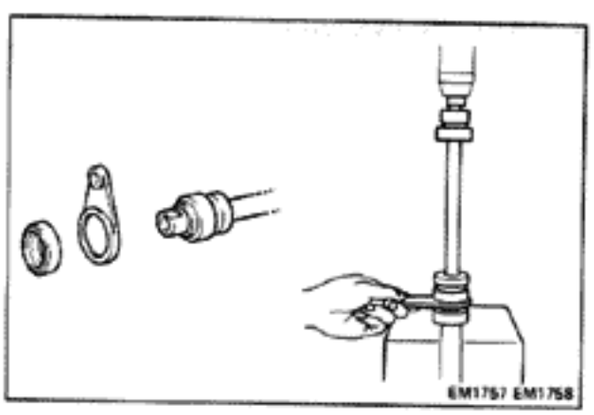

(b) Install the thrust plate and collar in the order as shown.

(c) Using a press, install the thrust plate and collar.

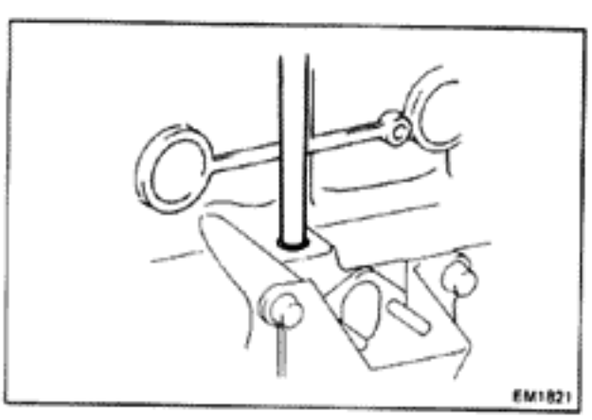

5. IF NECESSARY, REPLACE OIL PUMP GUIDE BUSHING

(a) Drive out the bushing from the outer side of the block.

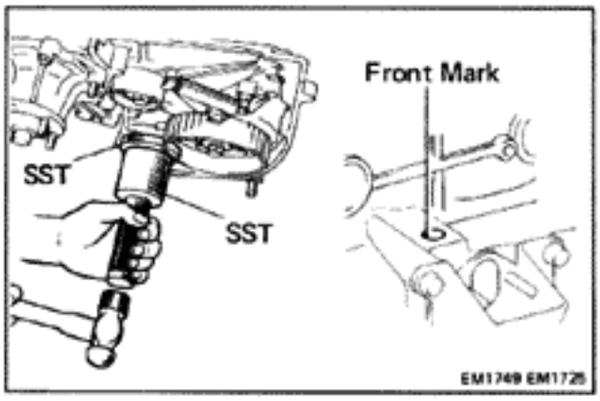

(b) Drive in the bushing from the inside of the block with a suitable tool.

NOTE: The oil hole should be positioned toward the crankshaft side.

(c) Make sure the front mark of the bushing is positioned toward the front of block.

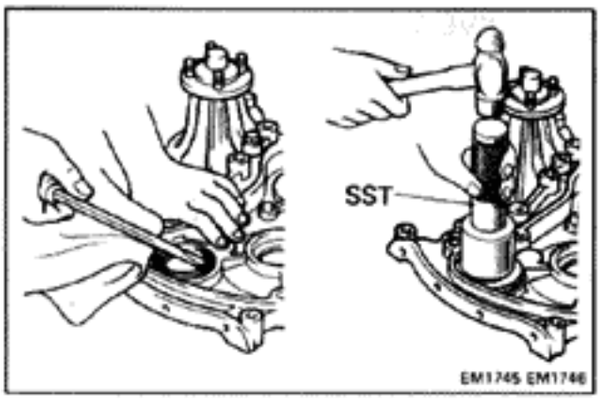

REPLACEMENT OF OIL SEALS

NOTE: There are two ways of oil seal replacement.

1. **IF TIMING BELT CASE IS REMOVED FROM CYLINDER BLOCK (Replacement of front oil seal and pump drive oil seal)**

(a) Using a screwdriver, remove the oil seal.

(b) Apply MP grease to the oil seal lip.

(c) Using SST, install the new oil seal.

SST 09214-41010 and 09506-35010

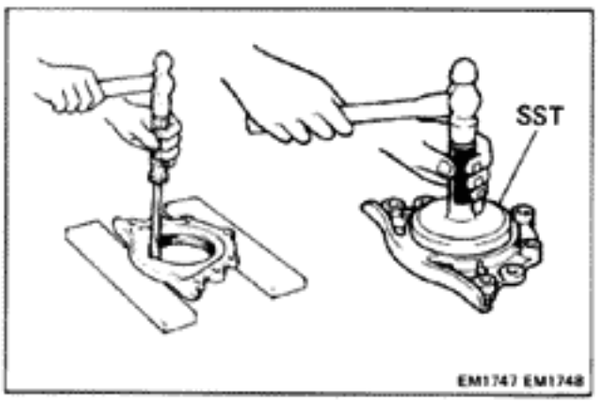

2. **IF REAR OIL SEAL RETAINER IS REMOVED FROM CYLINDER BLOCK (Replacement of rear oil seal)**

(a) Using a screwdriver, remove the oil seal.

(b) Apply MP grease to the oil seal lip.

(c) Using SST, install the new oil seal.

SST 09223-41020

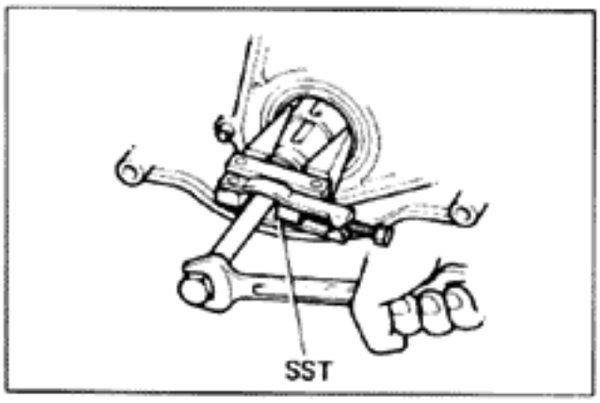

3. **IF TIMING BELT CASE IS INSTALLED ON CYLINDER BLOCK (Replacement of front oil seal)**

(a) Using SST, remove the front oil seal.

SST 09308-10010

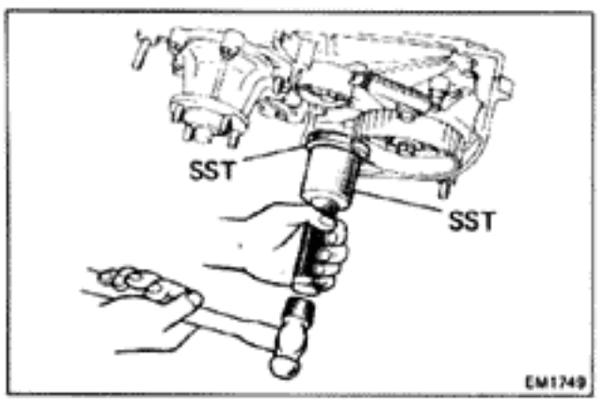

(b) Apply MP grease to the oil seal lip.

(c) Using SST, install the new oil seal.

SST 09214-41010 and 09506-35010

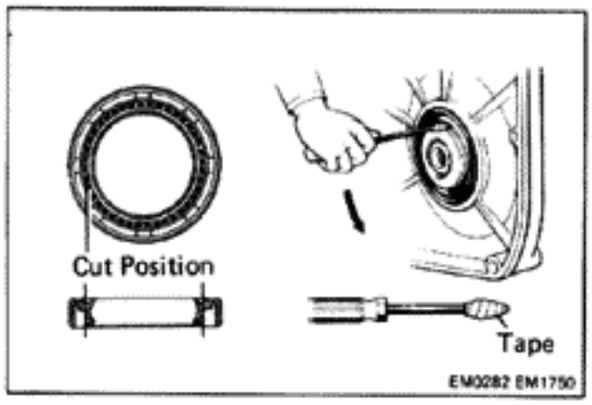

4. IF TIMING BELT CASE IS INSTALLED ON CYLINDER BLOCK (Replacement of pump drive oil seal)

(a) As shown in the figure, use a knife to cut off the oil seal lip.

(b) Using a screwdriver, pry out the oil seal.

NOTE: Be careful not to damage drive shaft.
Tape the screwdriver tip.

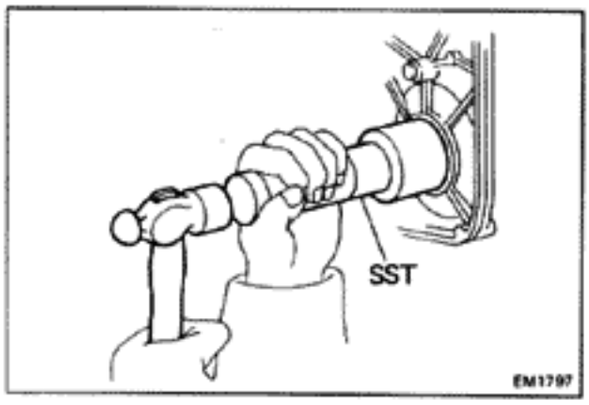

(c) Check the drive pump shaft where it contacts the oil lip surface for cracks or damage.

(d) Apply MP grease to the oil seal.

(e) Using SST, install the new oil seal.

SST 09214-41010

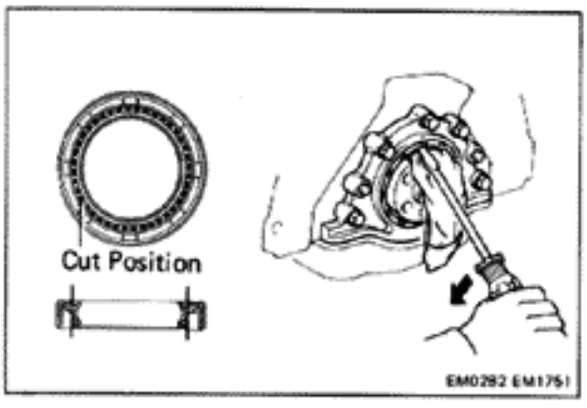

5. IF REAR OIL SEAL RETAINER IS INSTALLED ON CYLINDER BLOCK (Replacement of rear oil seal)

(a) As shown in the figure, use a knife to cut off the oil seal lip.

(b) Using a screwdriver, pry out the oil seal.

NOTE: Be careful not to damage the crankshaft.
Tape the screwdriver tip.

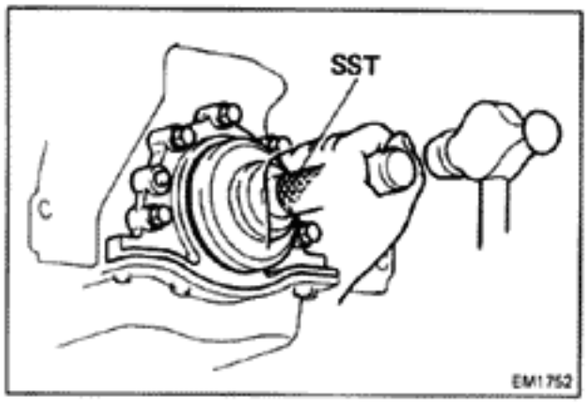

(c) Check the crankshaft where it contacts the oil lip surface for cracks or damage.

(d) Apply MP grease to the oil seal.

(e) Using SST, install the new oil seal.

SST 09223-41020

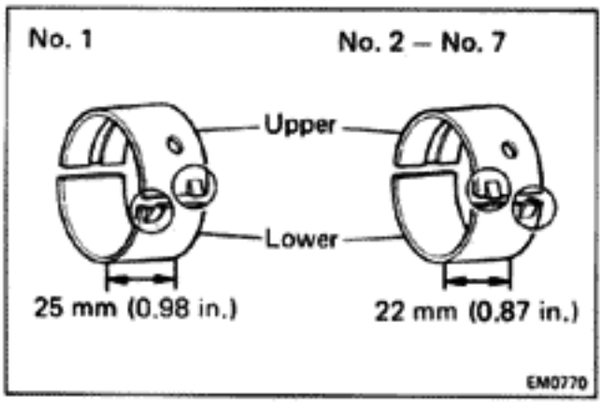

ASSEMBLY OF CYLINDER BLOCK

(See page EM-38)

1. INSTALL UPPER MAIN BEARING IN CYLINDER BLOCK

(a) Place the upper main bearing in the block.

(b) Install the upper thrust washers on the center main bearing with the oil grooves facing out.

(c) Lubricate the faces of the bearings with engine oil.

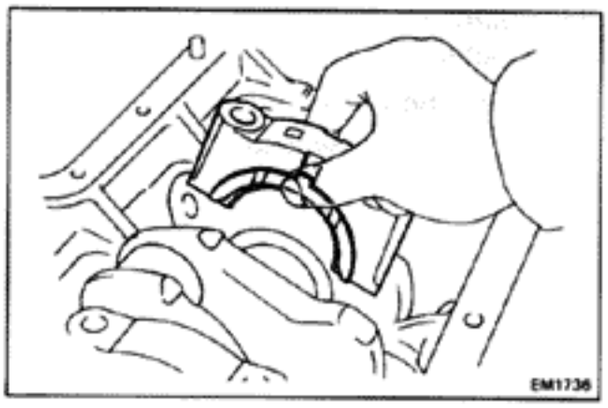

2. PLACE CRANKSHAFT IN CYLINDER BLOCK

3. INSTALL MAIN BEARING CAPS

NOTE: Each bearing cap is numbered.

(a) Install thrust washers on No. 4 bearing cap with the oil grooves facing out.

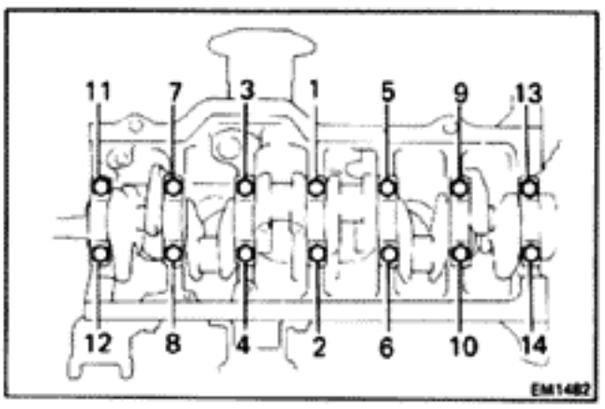

(b) Install the bearing caps in numbered order with arrows facing forward. Tighten the bolts to the specified torque in the sequence shown and in two or three passes.

Torque: 1,040 kg-cm (75 ft-lb, 102 N·m)

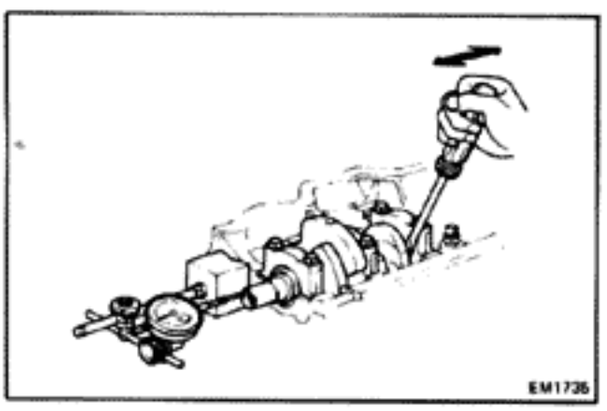

(c) Install the dial gauge and measure the crankshaft thrust clearance while prying the crankshaft back and forth with a screwdriver.

Standard clearance: 0.05 – 0.25 mm (0.0020 – 0.0098 in.)

(d) Check that the crankshaft turns.

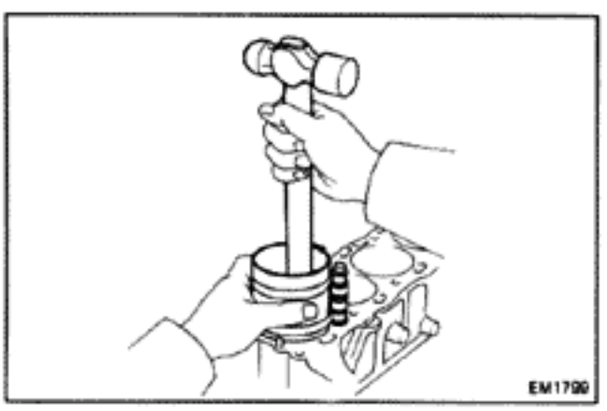

4. INSTALL PISTON AND CONNECTING ROD ASSEMBLY

(a) Lubricate the cylinder bore and the crankshaft pin with clean engine oil.

(b) Using a ring compressor, push the correctly numbered piston and rod assembly into each cylinder.
Make sure the notch and mark are facing forward.

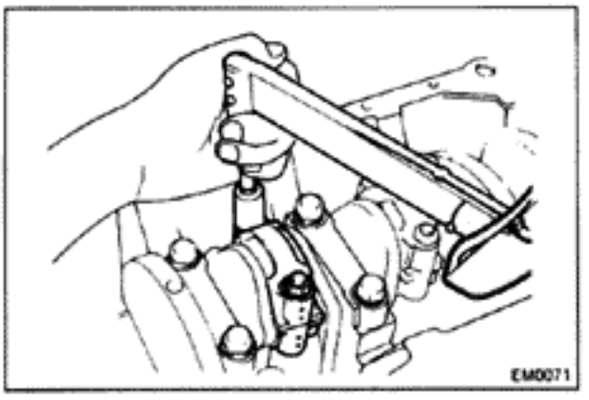

5. INSTALL ROD BEARING CAPS

(a) Match the numbered cap with the numbered rod.

(b) Align the marks punched on the rod and cap and tighten the cap nuts to specified torque alternately in two or three passes.

Torque: 450 kg-cm (33 ft-lb, 44 N·m)

(c) After tightening the caps, check that the crankshaft rotates smoothly.

6. MEASURE ROD THRUST CLEARANCE
(See step 16 on page EM-43)

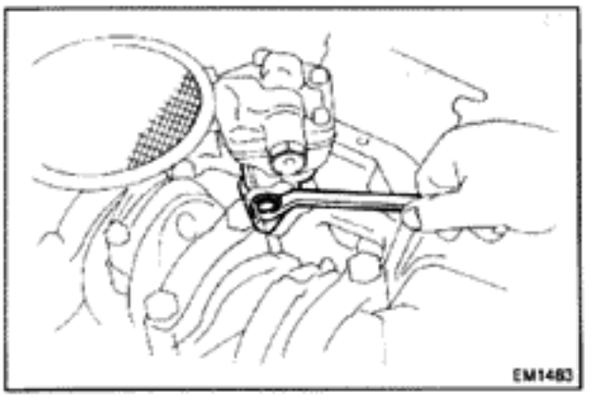

7. INSTALL OIL PUMP ASSEMBLY

(a) Clean the oil pump.

(b) Install the oil pump and holding bolt.
Torque the bolt.

Torque: 220 kg-cm (16 ft-lb, 22 N·m)

(c) Install the oil pipe with gasket, lock washer and union bolt. Tighten the oil pipe nut and bolt.

Torque: 350 kg-cm (25 ft-lb, 34 N·m)

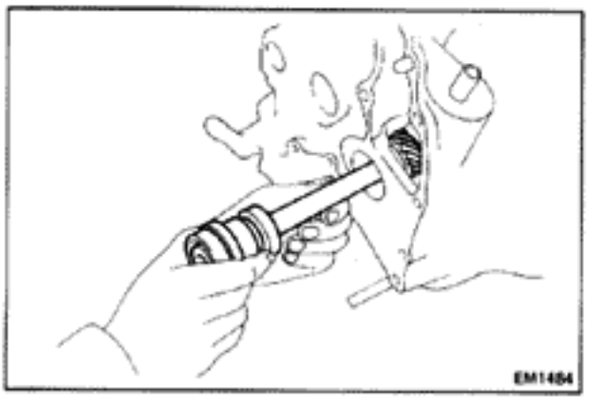

8. INSTALL OIL PUMP DRIVE SHAFT

While turning the drive shaft, slowly insert so as not to damage the drive shaft bearing.
Torque the bolt.

Torque: 130 kg-cm (9 ft-lb, 13 N·m)

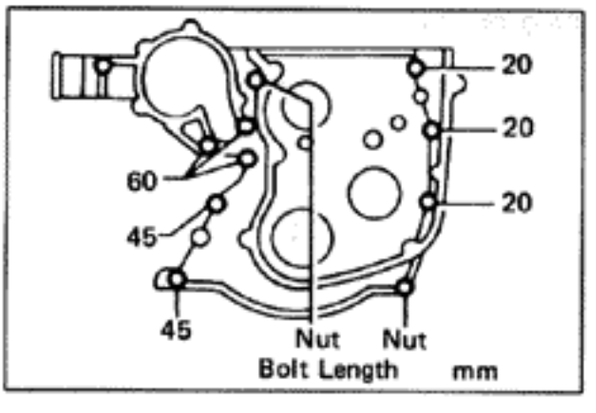

9. INSTALL REAR OIL SEAL RETAINER

10. INSTALL TIMING BELT CASE WITH WATER PUMP

(a) Position a new gasket on the cylinder block.

(b) Install the timing belt case with eight bolts and two nuts.

Torque:

8 mm bolt and nut	**185 kg-cm (13 ft-lb, 18 N·m)**
10 mm bolt	**375 kg-cm (27 ft-lb, 37 N·m)**

11. INSTALL OIL PAN
(See page LU-7)

12. INSTALL WATER BY-PASS PIPE

13. INSTALL FUEL HOSE SUPPORT

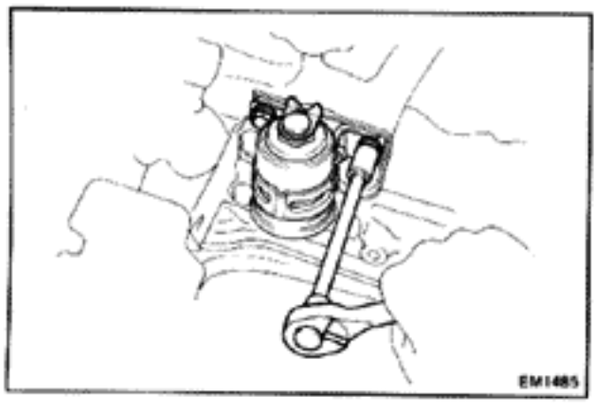

14. INSTALL FUEL FILTER

15. INSTALL ALTERNATOR

16. INSTALL OIL LEVEL GAUGE

17. INSTALL NEW OIL FILTER

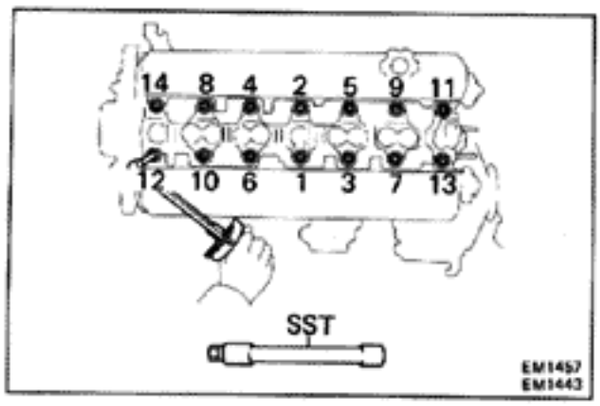

18. INSTALL CYLINDER HEAD ASSEMBLY

(a) Install the cylinder head assembly.

(b) Using SST, install and tighten the cylinder head bolts.

SST 09043-38100

Torque: 800 kg-cm (58 ft-lb, 78 N·m)

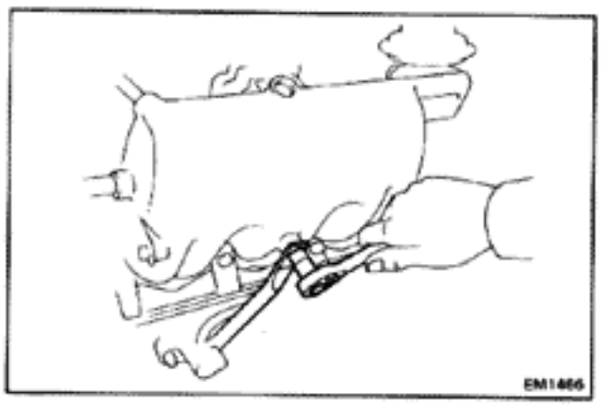

(c) Install the air intake chamber stay.

(d) Install the No.2 timing belt cover.

(e) Install the timing belt. (See page EM-14 to 17)

(f) Connect the PCV hose to the cylinder block.

(g) Connect the No.1 water by-pass hose to the water by-pass pipe.

19. REMOVE ENGINE STAND

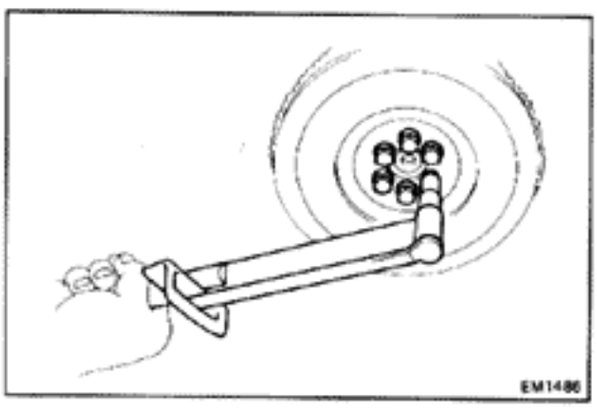

20. INSTALL REAR END PLATE

21. INSTALL FLYWHEEL OR DRIVE PLATE ON CRANKSHAFT

Install the flywheel or drive plate on crankshaft with six bolts. Torque the bolts.

Torque: 750 kg-cm (54 ft-lb, 74 N·m)

22. INSTALL CLUTCH DISC AND COVER TO FLYWHEEL (for M/T)

INSTALLATION OF ENGINE

1. INSTALL TRANSMISSION TO ENGINE

(a) Install the transmission housing mount bolts and exhaust pipe bracket.

(b) Install the starter with the mount nuts.

2. INSTALL ENGINE WITH TRANSMISSION IN VEHICLE

(a) Attach the engine hoist chain to the lifting brackets on the engine.

(b) Lower the engine into the engine compartment.

(c) Align the engine with the transmission and engine mounting supports.

(d) Install the engine mounting bolts on each side of the engine.

(e) Remove the hoist chain.

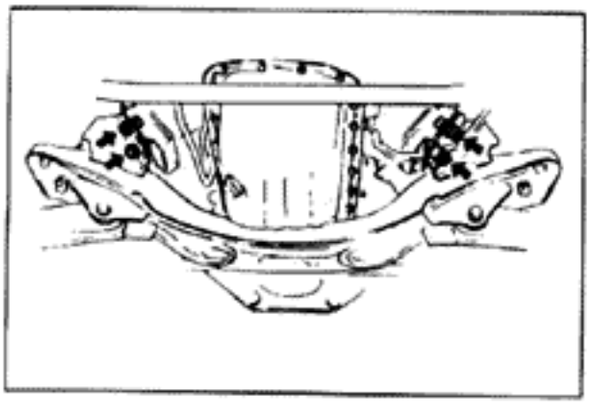

3. RAISE VEHICLE

CAUTION: Be sure the vehicle is securely supported.

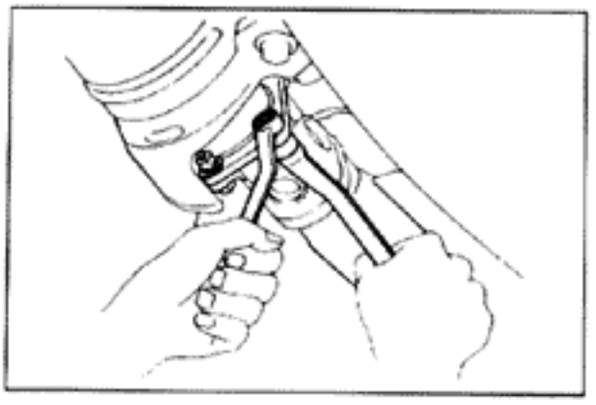

4. INSTALL ENGINE REAR SUPPORT MEMBER WITH GROUND STRAP TO BODY

5. INSTALL INTERMEDIATE SHAFT TO PROPELLER SHAFT

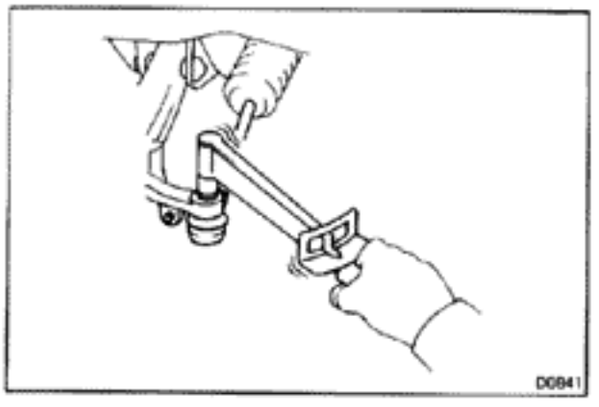

6. INSTALL POWER STEERING GEAR HOUSING

(a) Install the gear housing with two brackets.

Torque: 770 kg-cm (56 ft-lb, 76 N·m)

(b) Connect the tie rod ends and install a new cotter pin.

Torque: 600 kg-cm (43 ft-lb, 59 N·m)

(c) Install the sliding yoke and two lock bolts.

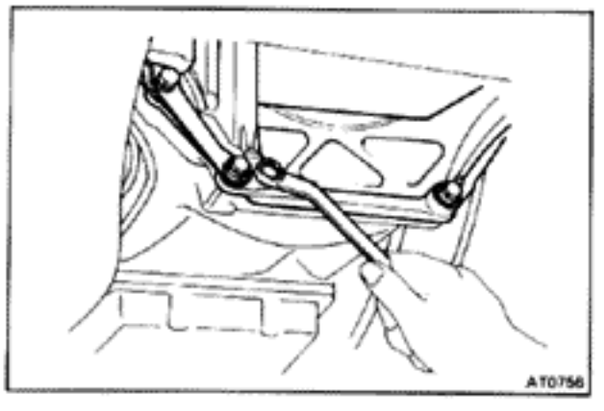

7. CONNECT BATTERY GROUND STRAP TO ENGINE MOUNTING BRACKET

8. INSTALL STIFFENER PLATE WITH GROUND STRAP

9. CONNECT FUEL HOSE AND TUBE

(a) Main tube to fuel filter.

(b) Return hose to fuel hose support.

10. INSTALL COOLANT RESERVOIR TANK

11. INSTALL RADIATOR

(a) Install the radiator and the two mounting bolts.

(b) Connect the coolant receiver tube.

(c) Connect the two oil cooler hose. (for A/T)

(d) Install the radiator lower hose.

12. INSTALL FAN SHROUD AND FLUID COUPLING

13. INSTALL AIR CLEANER CASE, AIR FLOW METER AND AIR INTAKE CONNECTOR PIPE

14. CONNECT EFI WIRE HARNESS TO ECU

15. CONNECT TWO HEATER HOSES TO BLOCK AND CYLINDER HEAD

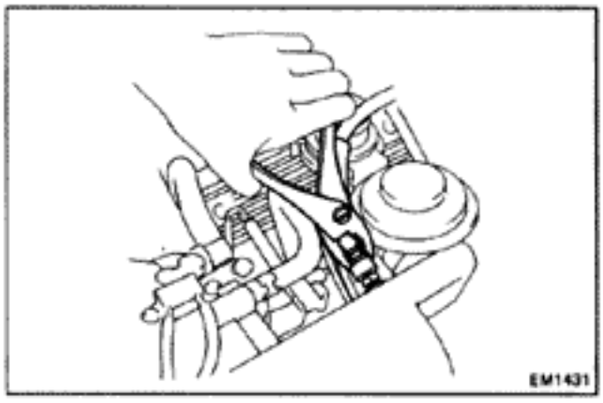

16. CONNECT FOLLOWING HOSES:

(a) Brake booster vacuum hose to the intake manifold

(b) Actuator vacuum hose to the intake manifold (with cruise control system)

(c) EGR valve vacuum hose

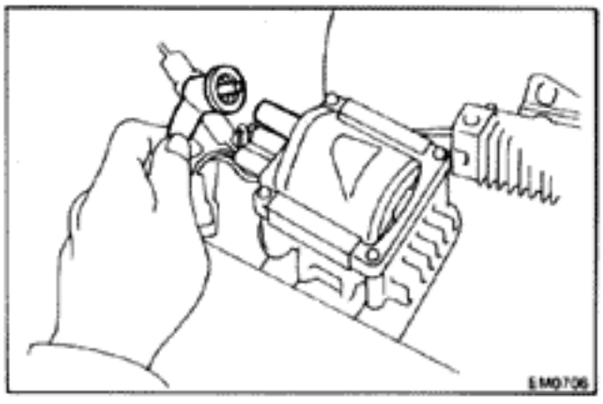

17. CONNECT FOLLOWING WIRES AND CABLES:

(a) Ground to the cylinder head

(b) Oxygen sensor wire

(c) Oil pressure sending unit wire

(d) ECT connectors

(e) High-tension cord from the ignition coil

(f) Distributor connector

(g) Water temp. sending unit wire

(h) Temp. switch wire (for A/T)

(i) Solenoid resistor wire connector

(j) Knock sensor wire connector

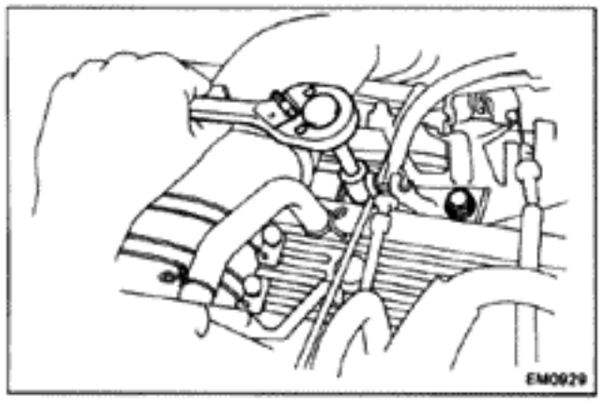

18. INSTALL ACCELERATOR AND ACTUATOR CABLE BRACKET

19. INSTALL THROTTLE CABLE BRACKET (for A/T)

20. FILL WITH COOLANT

Close the radiator and engine drain cocks and fill with coolant.

Total capacity: w/Heater

M/T 8.0 liters (8.5 US qts, 7.0 Imp. qts)

A/T 7.9 liters (8.3 US qts, 7.0 Imp. qts)

21. FILL WITH ENGINE OIL

Close the engine drain plug and fill with engine oil of API grade SF, fuel-efficient, multi-grade oil.

Capacity:

Dry fill
5.7 liters (6.0 US qts, 5.0 Imp. qts)
Drain and refill (w/ Oil filter change)
5.1 liters (5.4 US qts, 4.5 Imp. qts)
Drain and refill (w/o Oil filter change)
4.6 liters (4.9 US qts, 4.0 Imp. qts)

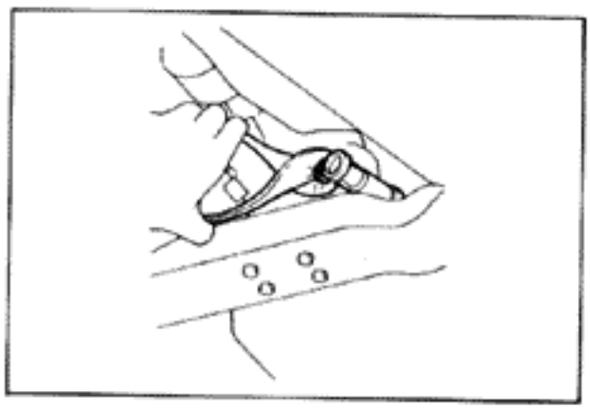

22. CONNECT WIRE TO BACK-UP LIGHT SWITCH (M/T only)

23. CONNECT SPEEDOMETER CABLE

24. INSTALL CLUTCH RELEASE CYLINDER (M/T only)

25. CONNECT SHIFT LINKAGE TO SHIFT LEVER (A/T only)

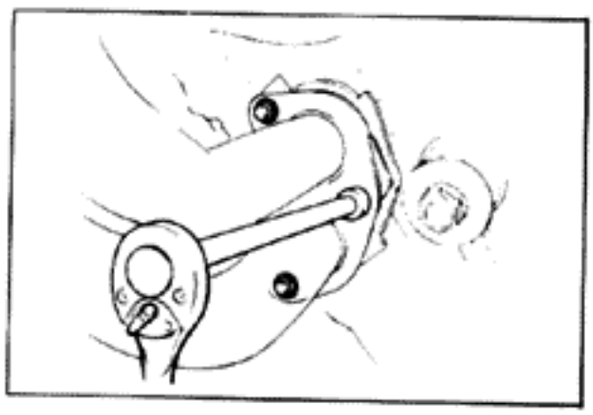

26. CONNECT EXHAUST PIPE TO EXHAUST MANIFOLD

27. INSTALL EXHAUST PIPE CLAMP TO TRANSMISSION HOUSING

28. LOWER VEHICLE

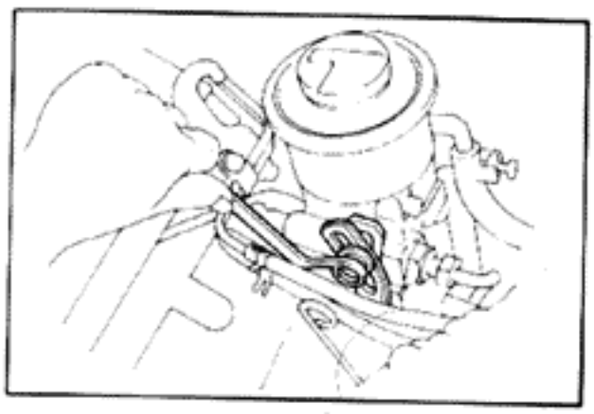

29. INSTALL POWER STEERING PUMP ONTO BRACKET

(a) Install the PS pump and stay.

(b) Install the PS pump pulley with the drive belt.

(c) Pry on the alternator to obtain the specified belt tension. (See page MA-4)

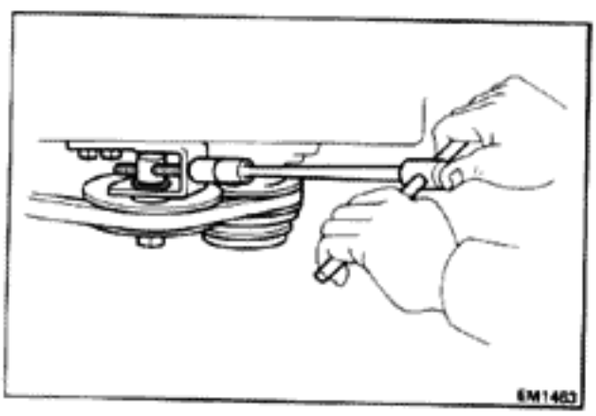

30. INSTALL COMPRESSOR WITH BRACKET ONTO BLOCK

(a) Install the compressor with the bracket onto the block.

(b) Turn the adjusting belt on the idler pulley until the specified belt tension is obtained. (See page MA-4)

31. INSTALL ENGINE UNDERCOVER

32. INSTALL WASHER TANK

33. INSTALL BATTERY

34. INSTALL HOOD

35. START ENGINE

Warm up the engine and inspect for leaks.

36. PERFORM ENGINE ADJUSTMENT

(a) Recheck the ignition timing.
(See page IG-10)

(b) Retighten the cylinder head bolts.
(See step 18 on page EM-60)

37. ROAD TEST

Perform a road test.

38. RECHECK COOLANT AND ENGINE OIL LEVEL

EMISSION CONTROL SYSTEMS

	Page
SYSTEM PURPOSE	EC-2
COMPONENT LAYOUT AND SCHEMATIC DRAWING	EC-3
POSITIVE CRANKCASE VENTILATION (PCV) SYSTEM	EC-4
FUEL EVAPORATIVE EMISSION CONTROL (EVAP) SYSTEM	EC-5
DASH POT (DP) SYSTEM	EC-7
EXHAUST GAS RECIRCULATION (EGR) SYSTEM	EC-10
THREE-WAY CATALYST (TWC) SYSTEM	EC-15

EC

NOTE: TROUBLESHOOTING

See page EM-2

SYSTEM PURPOSE

System	Abbreviation	Purpose
Positive crankcase ventilation	PCV	Reduces blow-by gas (HC)
Fuel evaporative emission control	EVAP	Reduces evaporative HC
Dash pot	DP	Reduces HC and CO
Exhaust gas recirculation	EGR	Reduces NOx
Three-way catalyst	TWC	Reduces HC, CO and NOx
Electronic fuel injection*	EFI	Regulates all engine conditions for reduction of exhaust emissions

Remarks *For inspection and repair of the EFI system, refer to EFI section.

COMPONENT LAYOUT AND SCHEMATIC DRAWING

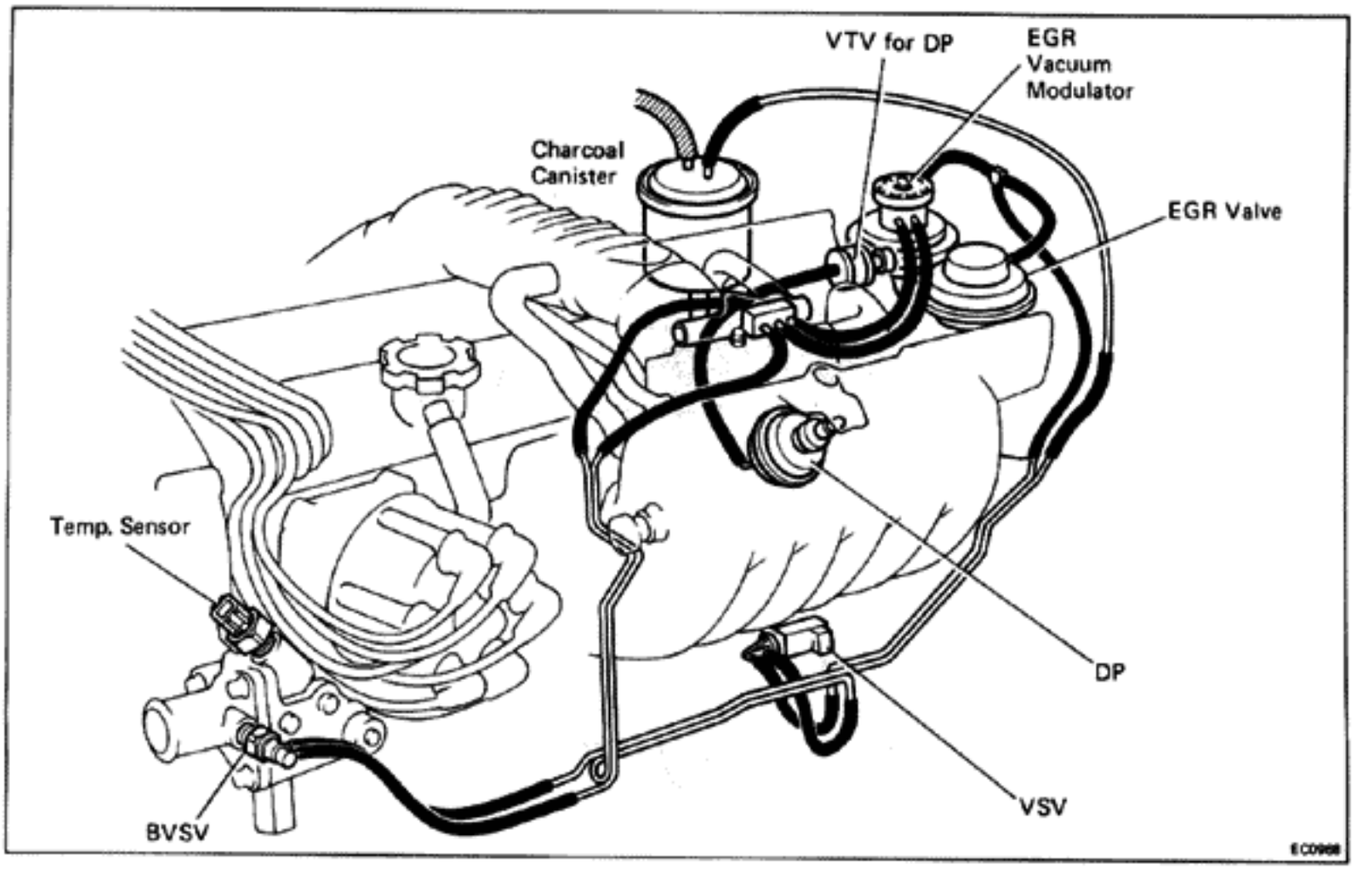

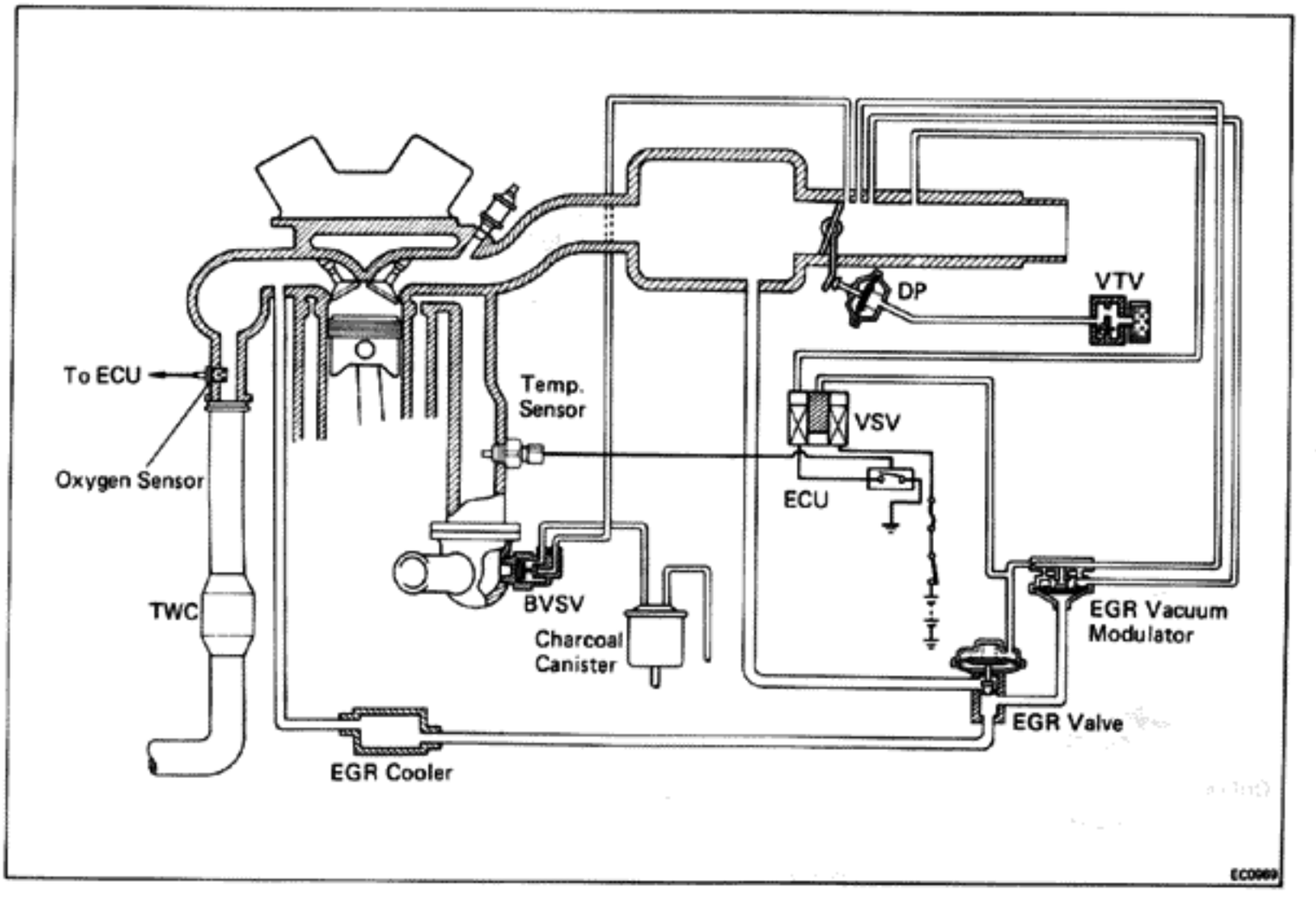

POSITIVE CRANKCASE VENTILATION (PCV) SYSTEM

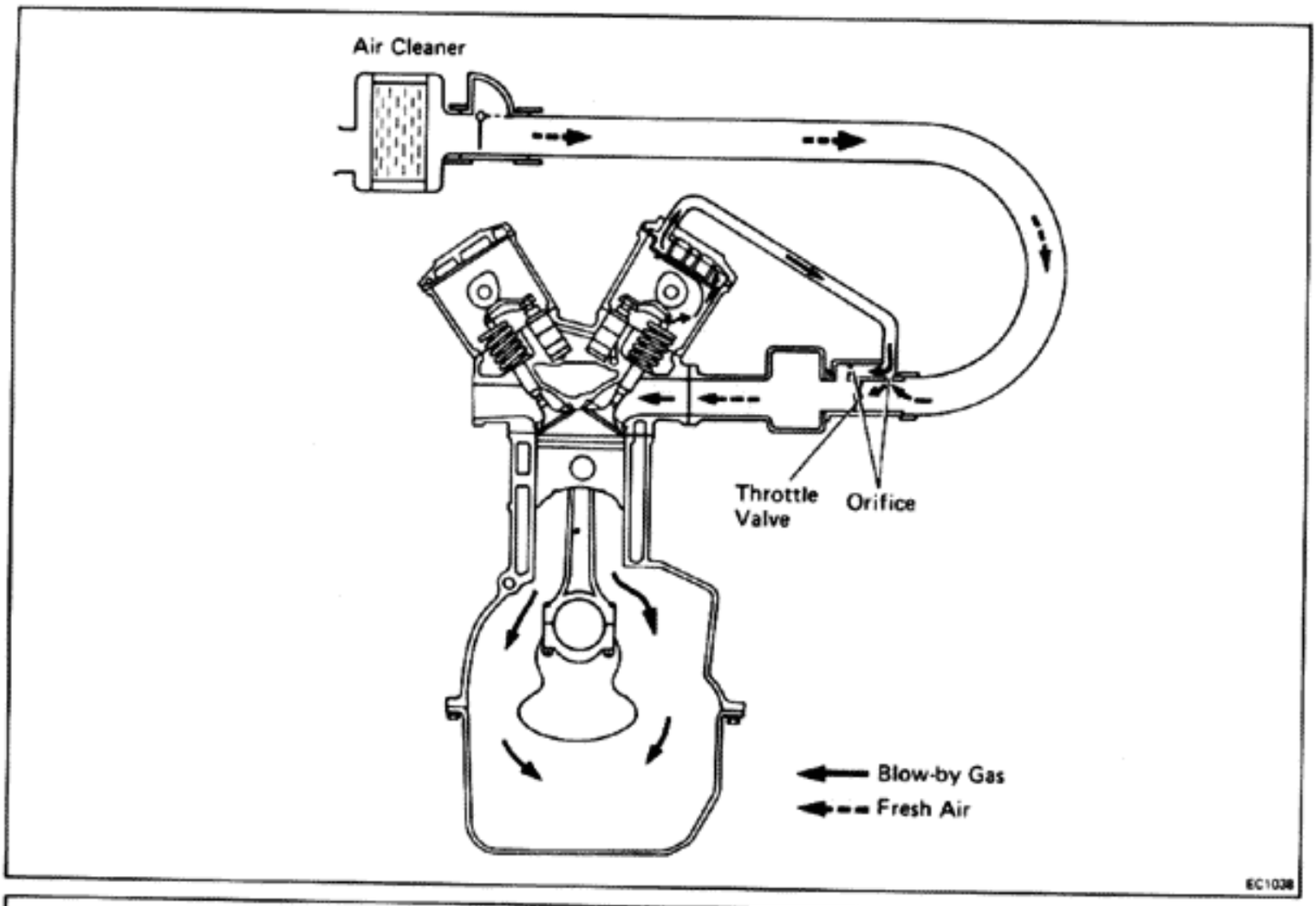

To reduce HC emission, crankcase blow-by gas (HC) is routed through two metering orifices to the intake manifold for combustion in the cylinders

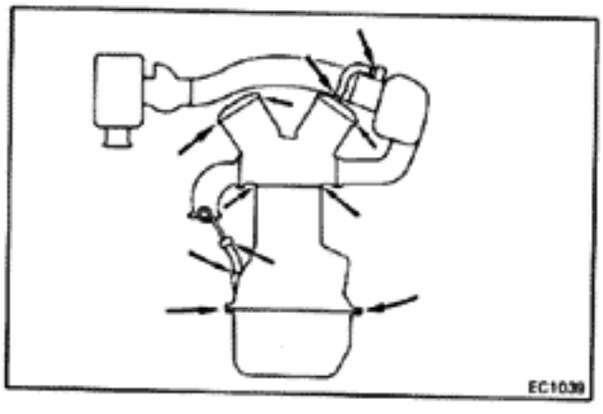

INSPECTION OF PCV HOSES AND CONNECTIONS

1. **VISUALLY INSPECT HOSES, CONNECTIONS AND GASKETS**

   Check for cracks, leaks or damage.

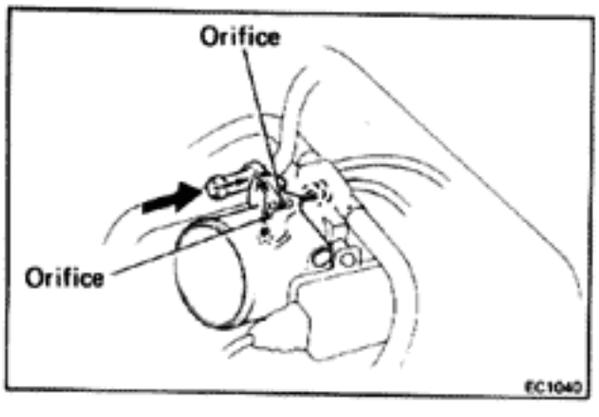

2. **CLEAN TWO ORIFICES**

   Clean off any gum deposits in the orifices with solvent and blow out with compressed air.

FUEL EVAPORATIVE EMISSION CONTROL (EVAP) SYSTEM

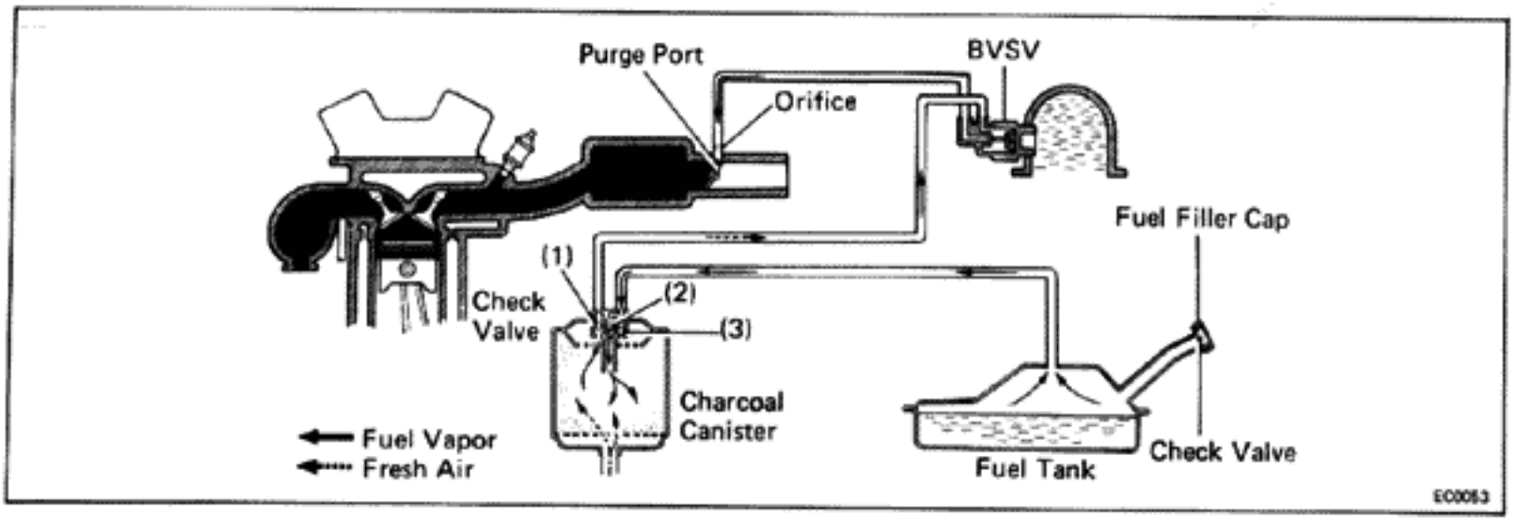

To reduce HC emission, evaporated fuel from the fuel tank is routed through the charcoal canister to the intake manifold for combustion in the cylinders

Coolant Temp.	BVSV	Throttle Valve Opening	Canister Check Valve			Check Valve in Cap	Evaporated Fuel (HC)
			(1)	(2)	(3)		
Below 35°C(95°F)	CLOSED	—	—	—	—	—	HC from tank is absorbed in the canister.
Above 54°C(129°F)	OPEN	Positioned below purge port	CLOSED	—	—	—	
		Positioned above purge port	OPEN	—	—	—	HC from canister is led into air intake chamber.
High pressure in tank	—	—	—	OPEN	CLOSED	CLOSED	HC from tank is absorbed in the canister.
High vacuum in tank	—	—	—	CLOSED	OPEN	OPEN	(Air is led into the fuel tank.)

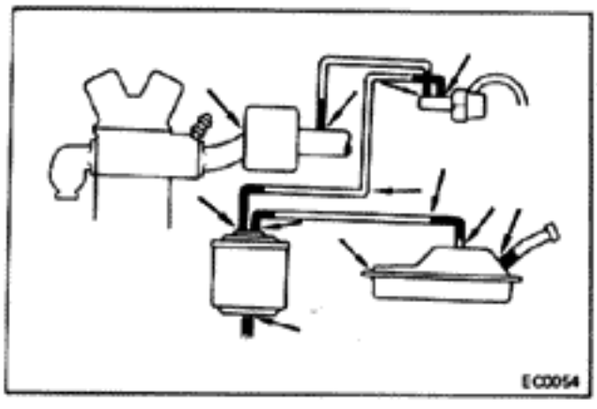

INSPECTION OF FUEL VAPOR LINES, FUEL TANK AND FILLER CAP

1. **VISUALLY INSPECT LINES AND CONNECTIONS**
   Look for loose connections, sharp bends or damage.
2. **VISUALLY INSPECT FUEL TANK**
   Look for deformation, cracks or fuel leakage.

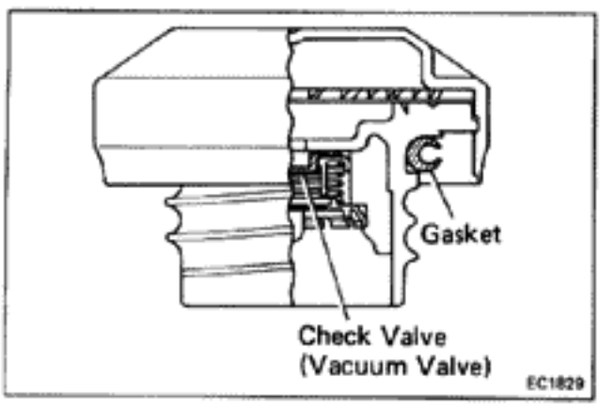

3. **VISUALLY INSPECT FUEL FILLER CAP**
   Check condition of gasket and cap.
   If necessary, repair or replace the cap.

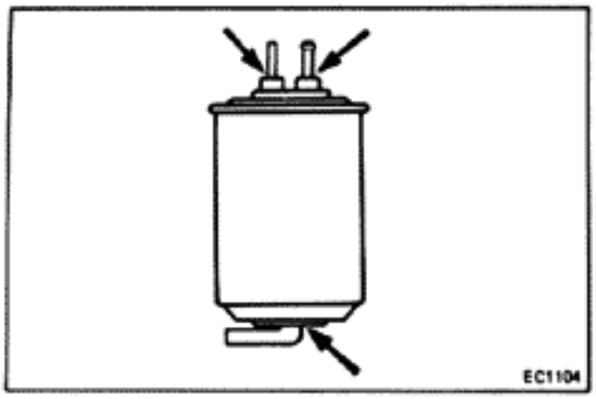

INSPECTION OF CHARCOAL CANISTER

1. **REMOVE CHARCOAL CANISTER**

2. **VISUALLY INSPECT CHARCOAL CANISTER CASE**

   Look for cracks or damage.

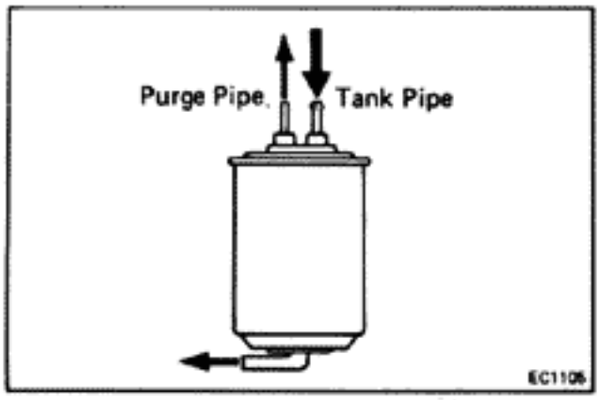

3. **CHECK FOR CLOGGED FILTER AND STUCK CHECK VALVE**

   (a) Using low pressure compressed air, blow into the tank pipe and check that the air flows without resistance from the other pipes.

   (b) Blow into the purge pipe and check that the air does not flow from the other pipes.

   If a problem is found replace the charcoal canister.

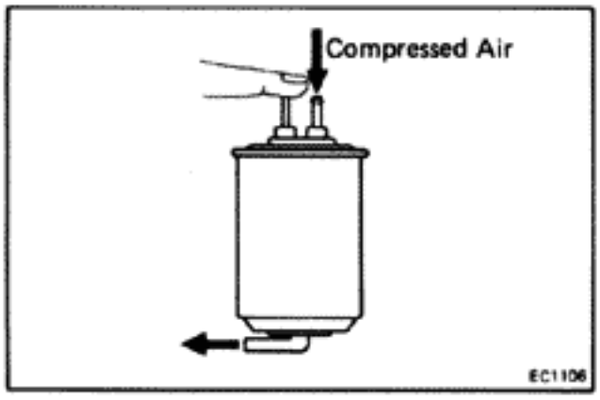

4. **CLEAN CANISTER FILTER**

   Clean the filter by blowing 3 kg/cm² (43 psi, 294 kPa) of compressed air into the tank pipe, while holding the other upper canister pipe closed.

   NOTE:
   - Do not attempt to wash the canister.
   - No activated carbon should come out.

5. **INSTALL CHARCOAL CANISTER**

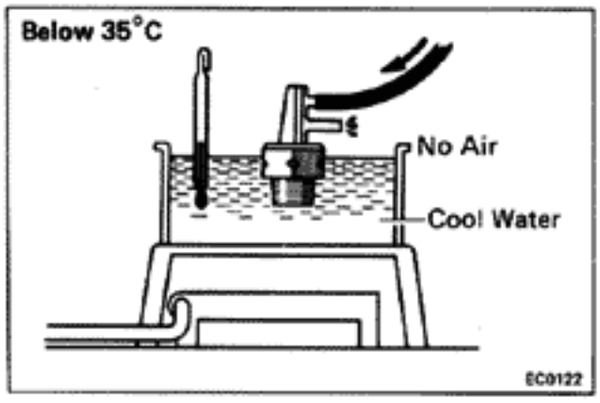

INSPECTION OF BVSV

CHECK BVSV BY BLOWING AIR INTO PIPE

(a) Drain the coolant from the radiator into a suitable container.

(b) Remove the BVSV from the water outlet.

(c) Cool the BVSV to below 35°C (95°F) with cool water.

(d) Blow air into a pipe and check that the BVSV is closed.

(e) Heat the BVSV to above 54°C (129°F) with hot water.

(f) Blow air into a pipe and check that the BVSV is open.

(g) Apply liquid sealer to the threads of the BVSV and install.

(h) Fill the radiator with coolant.

If a problem is found, replace the BVSV.

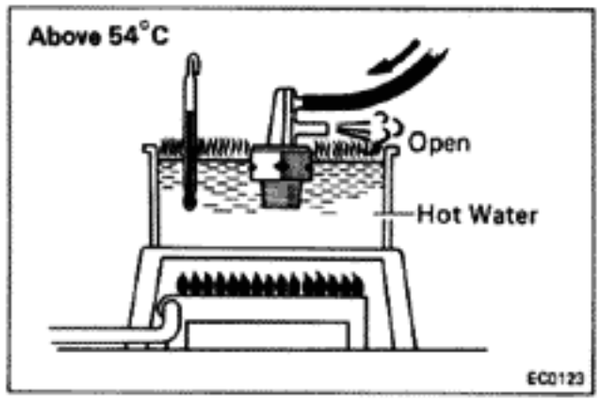

DASH POT (DP) SYSTEM

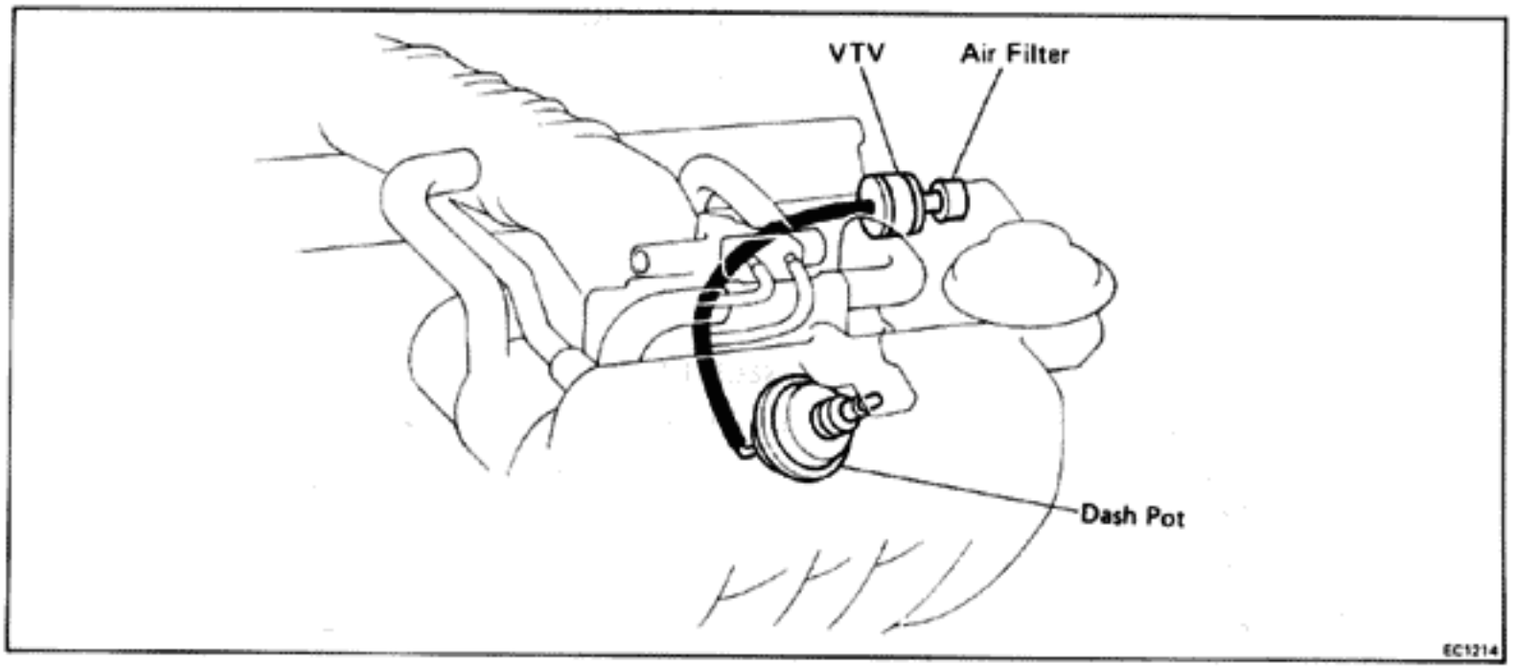

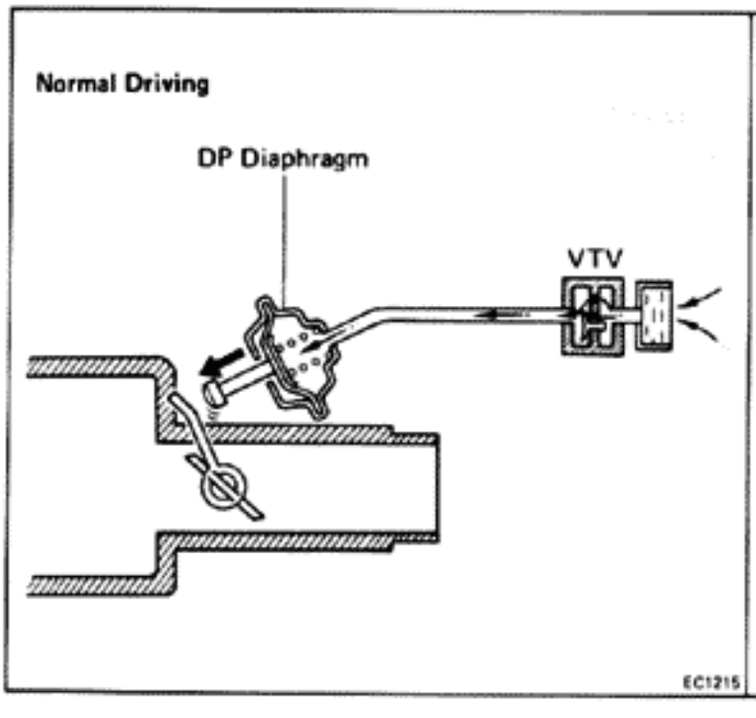

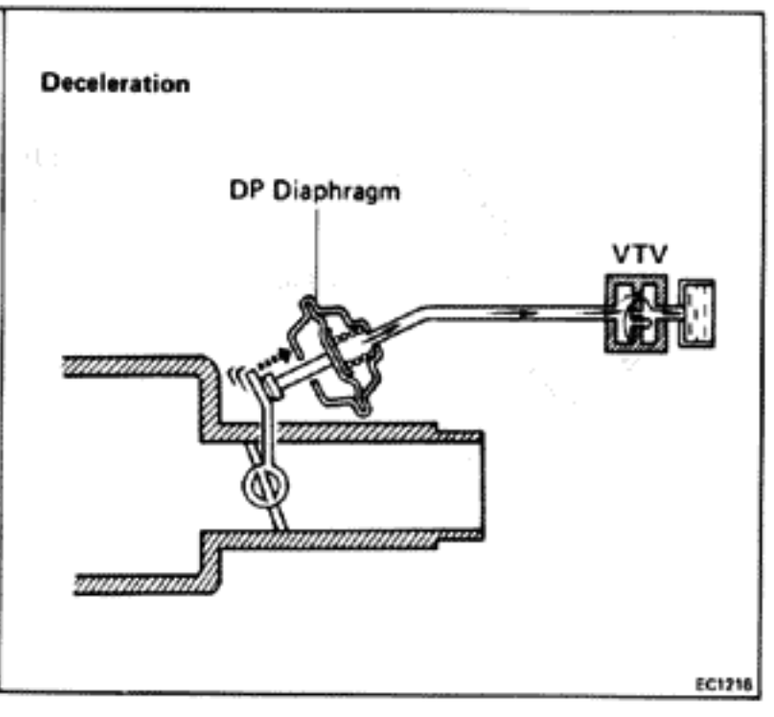

To reduce HC and CO emissions, when decelerating the dash pot opens the throttle valve slightly more than at idle. This causes the air-fuel mixture to burn completely.

Condition	Diaphragm	VTV	Throttle Valve
Idling	Pushed in by return force of throttle valve	CLOSED	Idle speed position
Normal driving	Pushed out by diaphragm spring	OPEN	High speed position
Deceleration	Pushed in by return force of throttle valve	CLOSED	Slightly opens and then slowly closes to idle position

INSPECTION OF DP SYSTEM

1. **WARM UP ENGINE**

2. **CHECK IDLE SPEED**

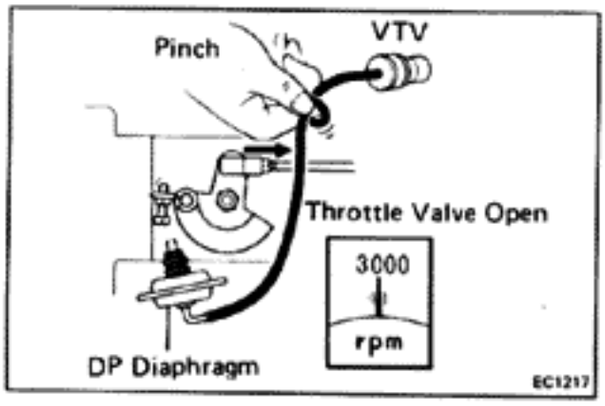

3. **CHECK DP SETTING SPEED**
   (a) Maintain engine speed at 3,000 rpm.
   (b) Pinch the vacuum hose between DP and VTV.

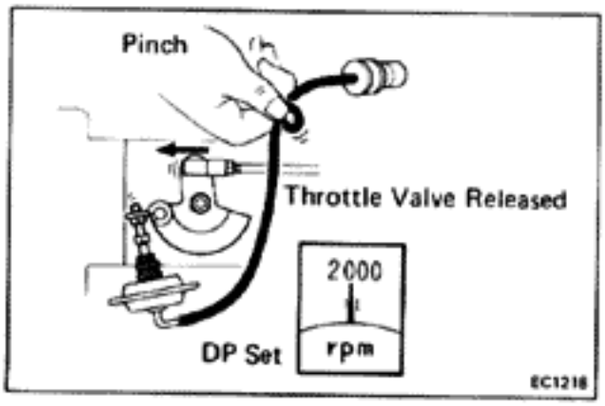

   (c) Release the throttle valve.
   (d) Check that the DP is set.

   DP setting speed: 2,000 rpm

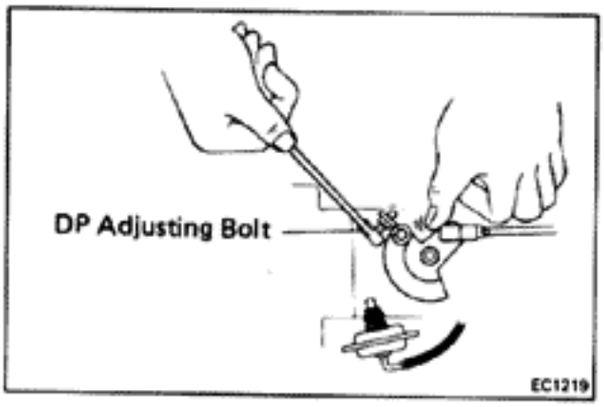

If not at specified speed, adjust with the DP adjusting bolt.

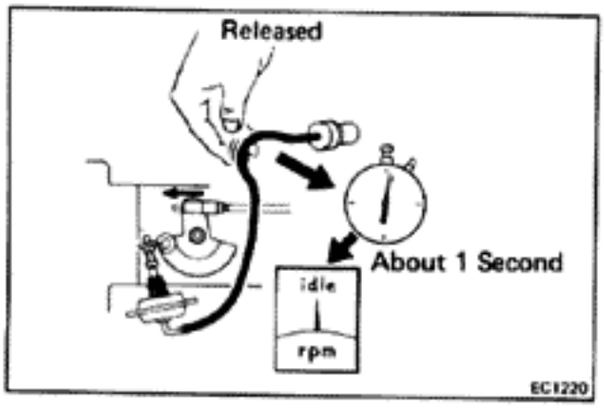

4. **CHECK OPERATION OF VTV**
   (a) Set the DP speed in the same procedure as above; (a) to (c).
   (b) Release the pinched hose and check that the engine returns to idle speed in about 1 second.

IF NO PROBLEM IS FOUND WITH THIS INSPECTION, THE SYSTEM IS OKAY; OTHERWISE INSPECT VTV

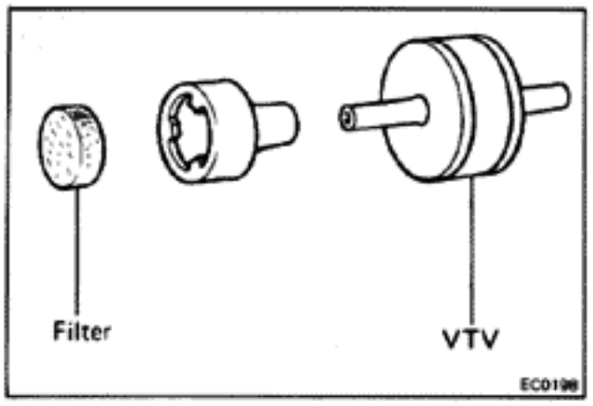

INSPECTION OF VTV

1. **CHECK AND CLEAN FILTER ON VTV**
   (a) Check the filter for contamination or damage.
   (b) Using compressed air, clean the filter.

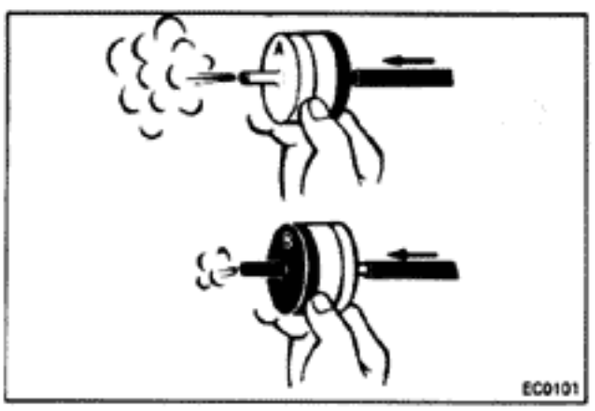

2. **CHECK VTV BY BLOWING AIR INTO EACH SIDE**
   (a) Check that air flows without resistance from B to A.
   (b) Check that air flows with difficulty from A to B.

EXHAUST GAS RECIRCULATION (EGR) SYSTEM

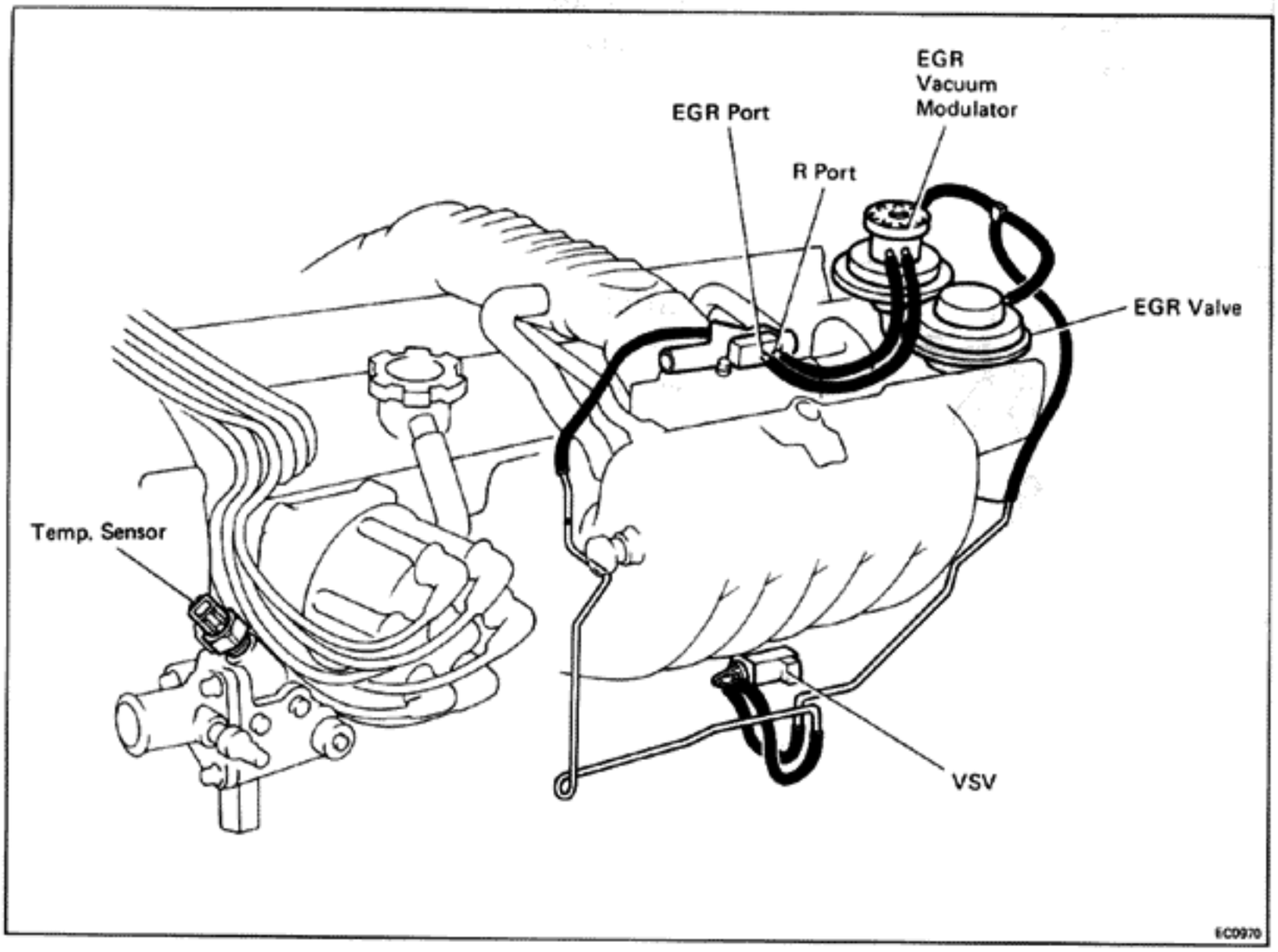

(1)

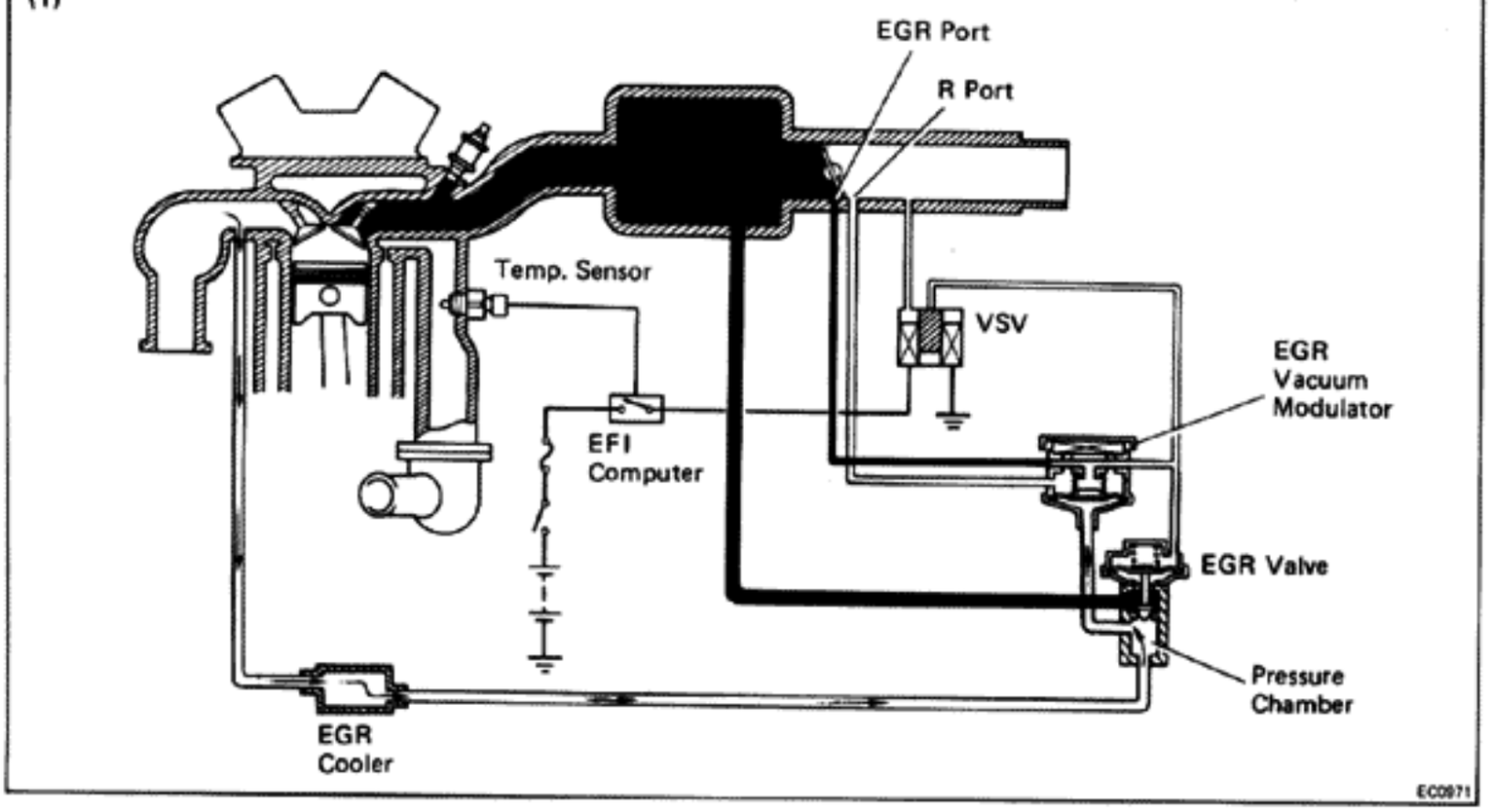

(2)

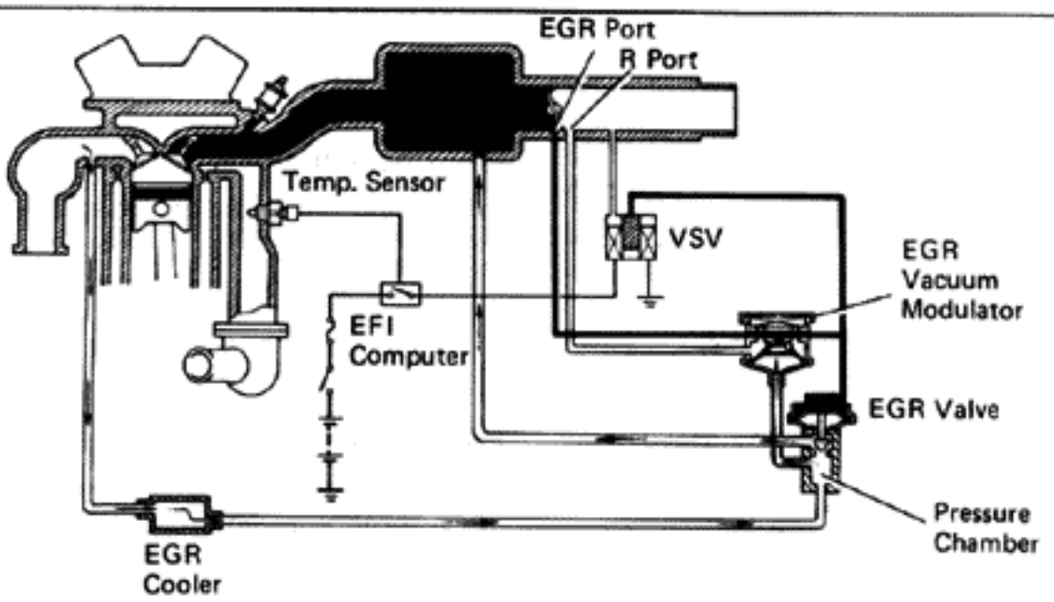

(3)

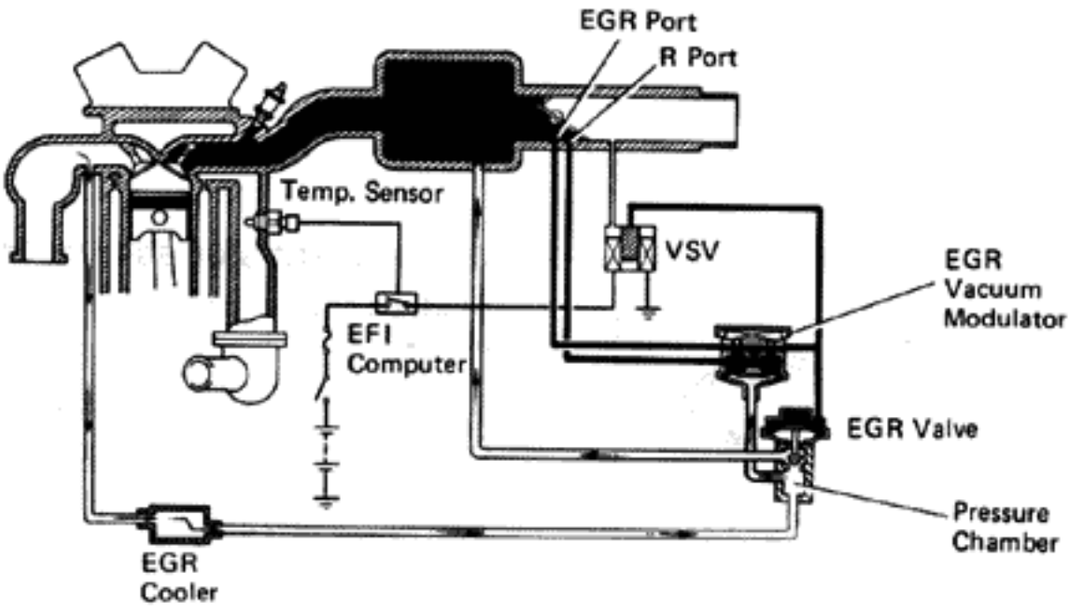

EC0972
EC0973

To reduce NOx emission, part of the exhaust gases are recirculated through the EGR valve to the intake manifold to lower the maximum combustion temperature.

Coolant Temp.	VSV	Throttle Valve Opening Angle	Pressure in the EGR Valve Pressure Chamber		EGR Vacuum Modulator	EGR Valve	Exhaust Gas
Below 57°C (135°F)	OPEN	—	—		—	CLOSED	Not recirculated
Above 63°C (145°F)	CLOSE	Positioned below EGR port	—		—	CLOSED	Not recirculated
		Positioned between EGR port and R port	(1) LOW	*Pressure constantly alternating between low and high	OPENS passage to atmosphere	CLOSED	Not recirculated
			(2) HIGH		CLOSES passage to atmosphere	OPEN	Recirculated
		Positioned above R port	(3) HIGH	**	CLOSES passage to atmosphere	OPEN	Recirculated (increase)

Remarks: *Pressure increase → Modulator closes → EGR valve opens → Pressure drops
EGR valve closes ← Modulator opens ←

**When the throttle valve is positioned above the R port, the EGR vacuum modulator will close the atmosphere passage and open the EGR valve to increase the EGR gas, even if the exhaust pressure is insufficiently low.

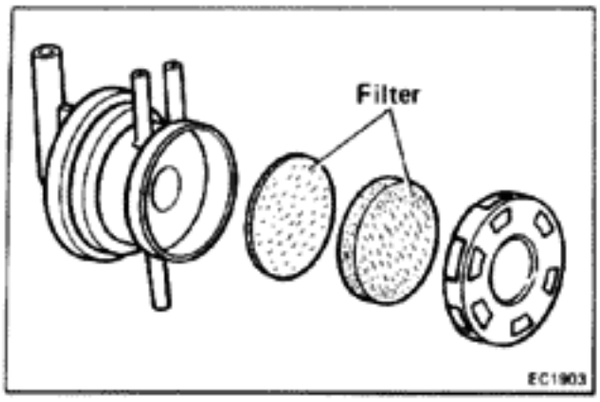

INSPECTION OF EGR VALVE

1. CHECK AND CLEAN FILTER IN EGR VACUUM MODULATOR

(a) Check the filter for contamination or damage.

(b) Using compressed air, clean the filter.

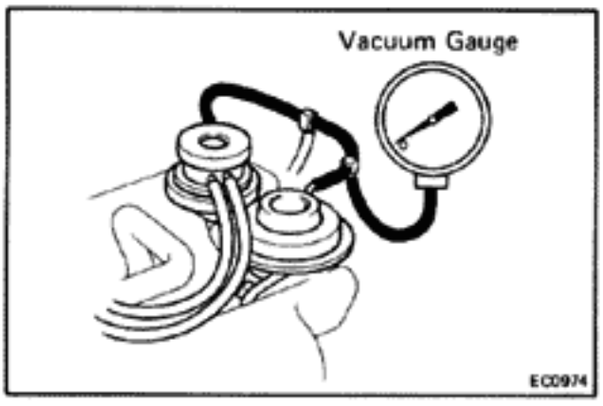

2. PREPARATION

Disconnect the vacuum hose from the EGR valve and, using a three way union, connect a vacuum gauge to it.

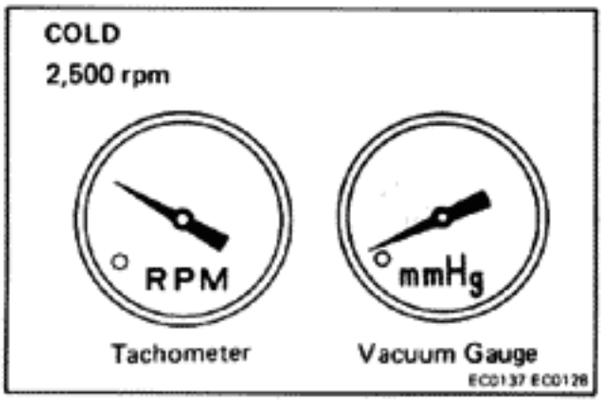

3. CHECK SEATING OF EGR VALVE

Start the engine and check that the engine starts and runs at idle.

4. CHECK VSV WITH COLD ENGINE

(a) The coolant temperature should be below 57°C (135°F).

(b) Check that the vacuum gauge indicates zero at 2,500 rpm.

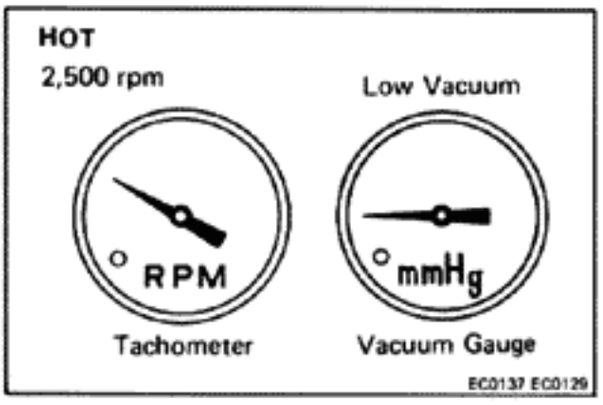

5. CHECK VSV AND EGR VACUUM MODULATOR WITH WARM ENGINE

(a) Warm up the engine.

(b) Check that the vacuum gauge indicates about 70 mm Hg (2.76 in.Hg, 9.3 kPa) at 2,500 rpm.

(c) Check that the vacuum gauge indicates zero at idle.

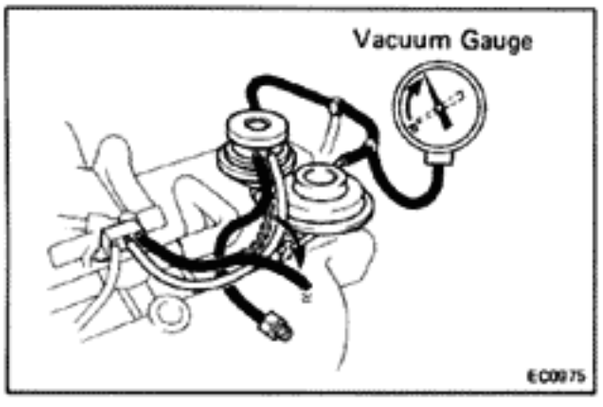

(d) Disconnect the vacuum hose from R port of the EGR vacuum modulator and connect R port directly to the intake manifold with another hose.

(e) Check that the vacuum gauge indicates high vacuum at 2,500 rpm.

NOTE: As a large amount of EGR gas enters, the engine will misfire.

(f) Disconnect the vacuum gauge and reconnect the vacuum hoses to the proper locations.

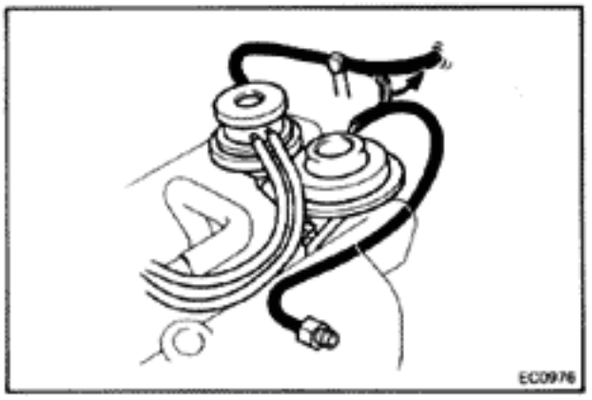

6. CHECK EGR VALVE

(a) Apply vacuum directly to the EGR valve with the engine idling.

(b) Check that the engine runs rough or dies.

(c) Reconnect the vacuum hoses to the proper location.

IF NO PROBLEM IS FOUND WITH THIS INSPECTION, THE SYSTEM IS OKAY; OTHERWISE INSPECT EACH PART

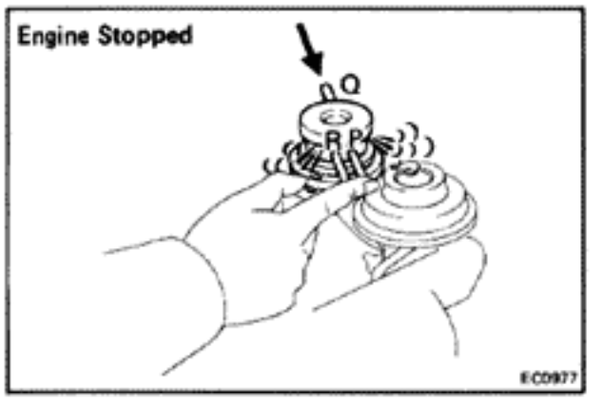

INSPECTION OF EGR VACUUM MODULATOR

CHECK EGR VACUUM MODULATOR OPERATION

(a) Disconnect the vacuum hoses from ports P, Q and R of the EGR vacuum modulator.

(b) Block ports P and R with your finger.

(c) Blow air into port Q. Check that the air passes through to the air filter side freely.

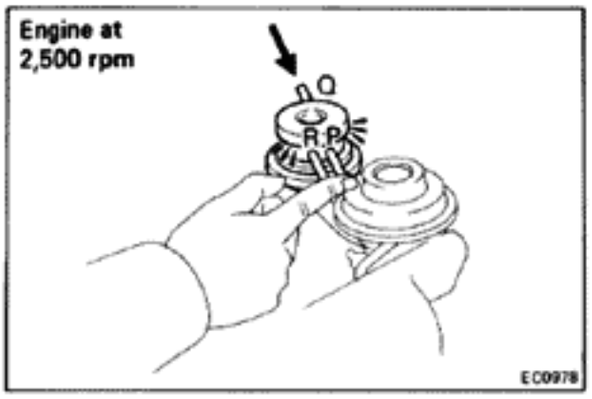

(d) Start the engine and maintain engine speed at 2,500 rpm.

(e) Repeat the above test. Check that there is a strong resistance to air flow.

(f) Disconnect the vacuum hoses to the proper locations.

If a problem is found, replace the EGR vacuum modulator.

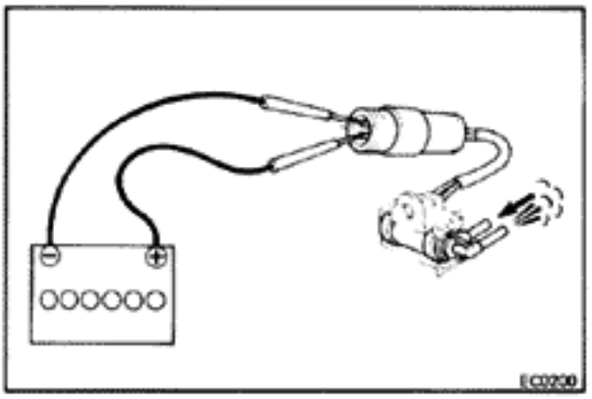

INSPECTION OF VSV

1. CHECK VACUUM CIRCUIT CONTINUITY IN THE VSV BY BLOWING AIR INTO PIPE

(a) Connect the VSV terminals to the battery terminals as illustrated.

(b) Blow air into a pipe and check that the VSV is open.

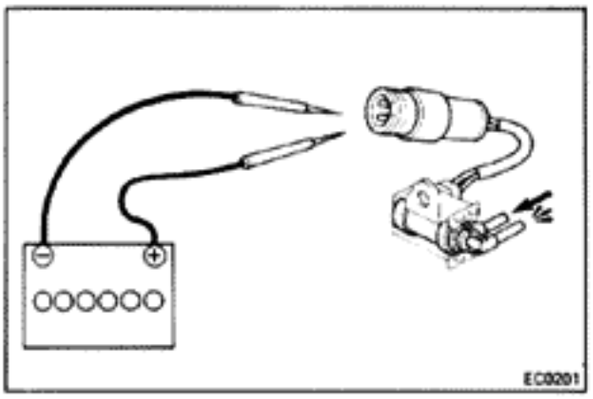

(c) Disconnect the battery.

(d) Blow air into a pipe and check that the VSV is closed.

If a problem is found, replace the VSV.

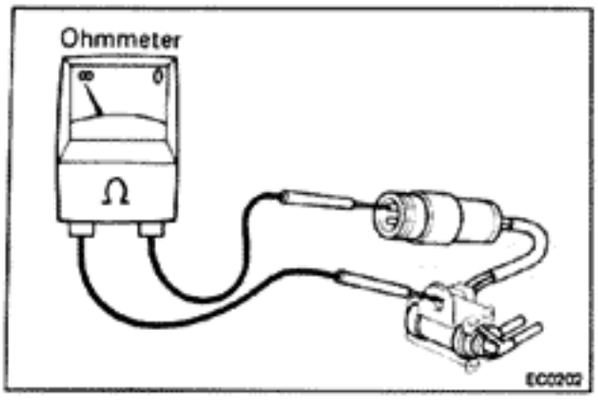

2. CHECK FOR SHORT CIRCUIT

Using an ohmmeter, check that there is no continuity between the terminals and the VSV body.

If there is continuity, replace the VSV.

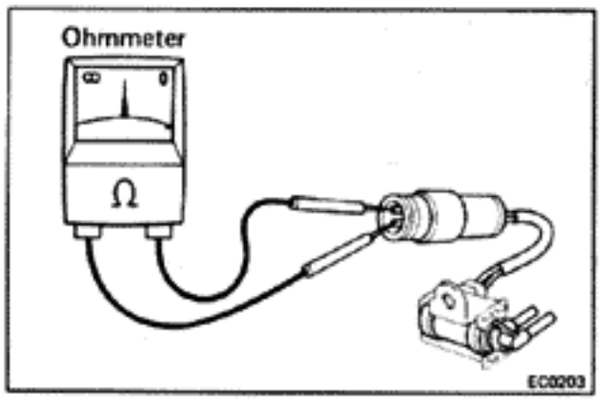

3. CHECK FOR OPEN CIRCUIT

Using an ohmmeter, measure the resistance between the terminals.

Specified resistance: 38 — 44 Ω at 20°C (68°F)

If the resistance is not within specification, replace the VSV.

INSPECTION OF EGR VALVE

1. REMOVE EGR VALVE

Check the valve for sticking and heavy carbon deposits. If a problem is found, replace it.

2. INSTALL EGR VALVE WITH NEW GASKET

INSPECTION OF WATER TEMP. SENSOR

(See page FI-73)

THREE-WAY CATALYST (TWC) SYSTEM

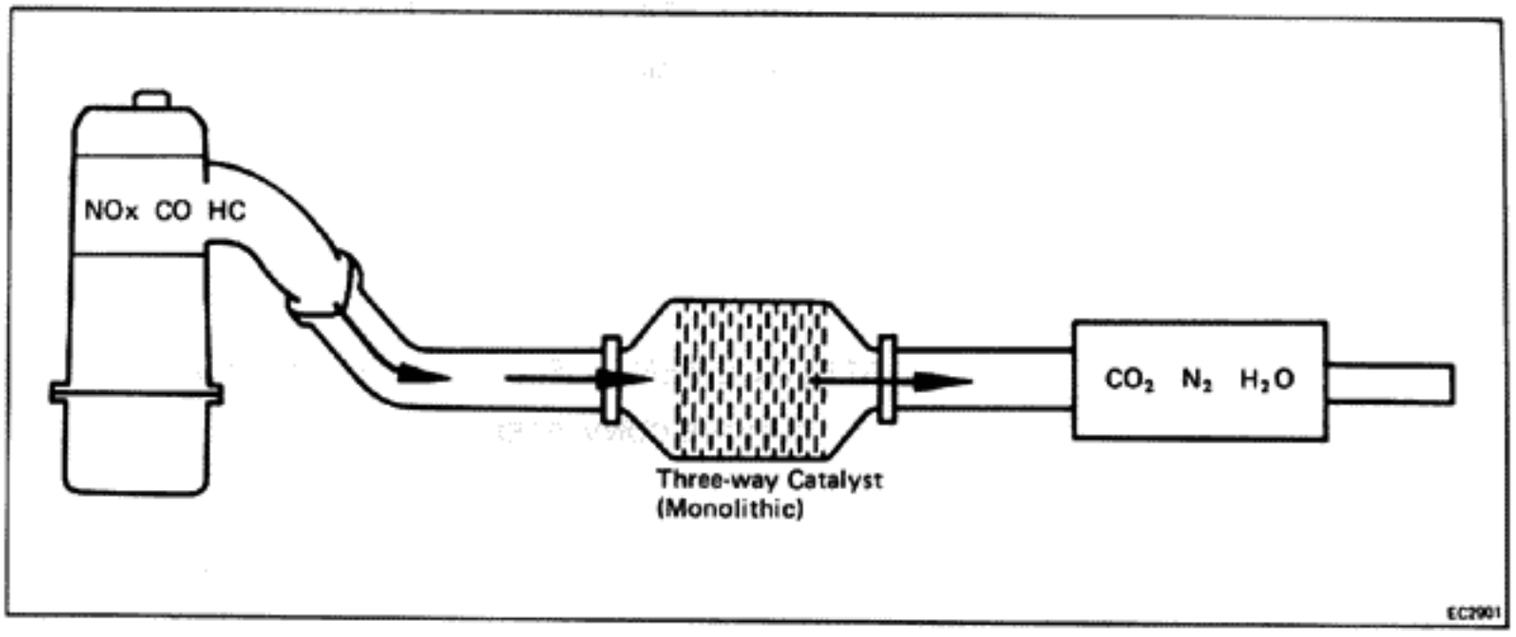

To reduce HC, CO and NOx emissions, they are oxidized, reduced and converted to nitrogen (N_2), carbon dioxide (CO_2) and water (H_2O) by the catalyst.

Exhaust port		TWC		Exhaust Gas
HC,CO, AND NOx	→	OXIDATION AND REDUCTION	→	CO_2 H_2O N_2

INSPECTION OF EXHAUST PIPE ASSEMBLY

1. CHECK CONNECTIONS FOR LOOSENESS OR DAMAGE
2. CHECK CLAMPS FOR WEAKNESS, CRACKS OR DAMAGE

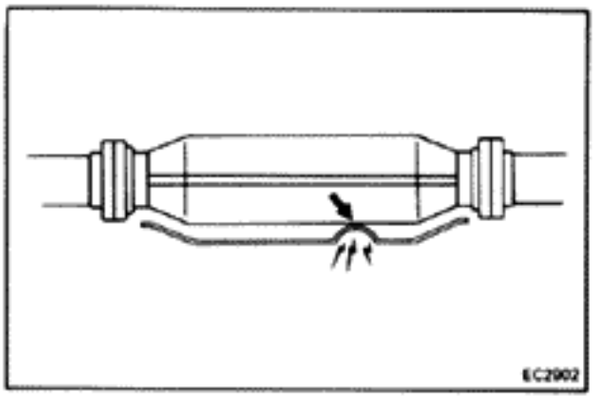

INSPECTION OF CATALYTIC CONVERTER

CHECK FOR DENTS OR DAMAGE

If any part of protector is damaged or dented to the extent that it contacts the catalyst, repair or replace.

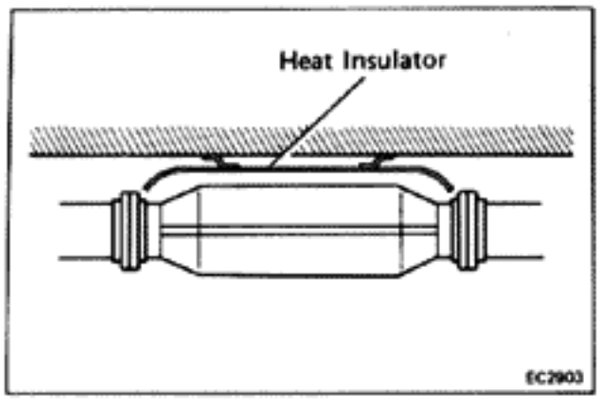

INSPECTION OF HEAT INSULATOR

1. **CHECK HEAT INSULATOR FOR DAMAGE**
2. **CHECK FOR ADEQUATE CLEARANCE BETWEEN CATALYTIC CONVERTER AND HEAT INSULATOR**

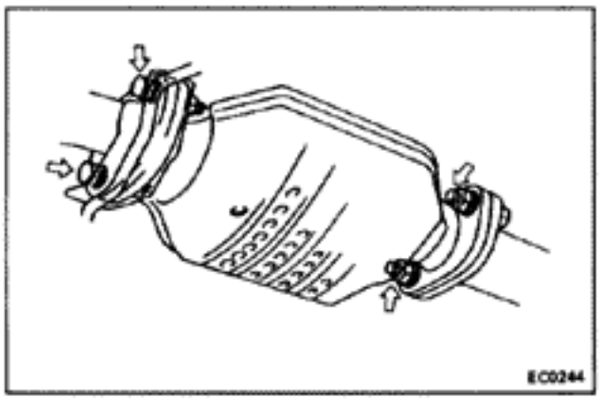

REPLACEMENT OF CATALYTIC CONVERTER

1. **REMOVE CONVERTER**
   (a) Jack up the vehicle.
   (b) Check that the converter is cool.
   (c) Remove the bolts at the front and rear of the converter.
   (d) Remove the converter and gaskets.
2. **INSTALL CONVERTER**
   (a) Place new gaskets on the converter front and rear pipes, and connect the converter to the exhaust pipes.
   (b) Tighten the bolts.

   Torque: Catalyst — Exhaust pipe
   440 kg-cm (32 ft-lb, 43 N·m)

   (c) Reinstall the bracket bolts and tighten them.

EFI SYSTEM

	Page
SYSTEM DESCRIPTION	FI-2
PRECAUTIONS	FI-4
INSPECTION PRECAUTIONS	FI-4
TROUBLESHOOTING	FI-8
DIAGNOSIS SYSTEM	FI-22
TROUBLESHOOTING WITH VOLT/ OHMMETER	FI-28
TROUBLESHOOTING FOR EFI ELECTRONIC CIRCUIT WITH VOLT/OHMMETER	FI-29
FUEL SYSTEM	FI-44
Fuel Pump	FI-44
Cold Start Injector	FI-49
Pressure Regulator	FI-52
Injector	FI-53
Fuel Tank and Line	FI-57
AIR INDUCTION SYSTEM	FI-58
Air Flow Meter	FI-58
Idle Speed Control (ISC) Valve	FI-60
Throttle Body	FI-63
ELECTRONIC CONTROL SYSTEM	FI-67
Location of Electronic Control Parts	FI-67
Main Relay	FI-68
Circuit Opening Relay	FI-69
Solenoid Resistor	FI-70
Start Injector Time Switch	FI-71
Water Temp. Sensor	FI-72
Oxygen Sensor	FI-73
Electronic Controlled Unit (ECU)	FI-75
Fuel Cut RPM	FI-79

SYSTEM DESCRIPTION

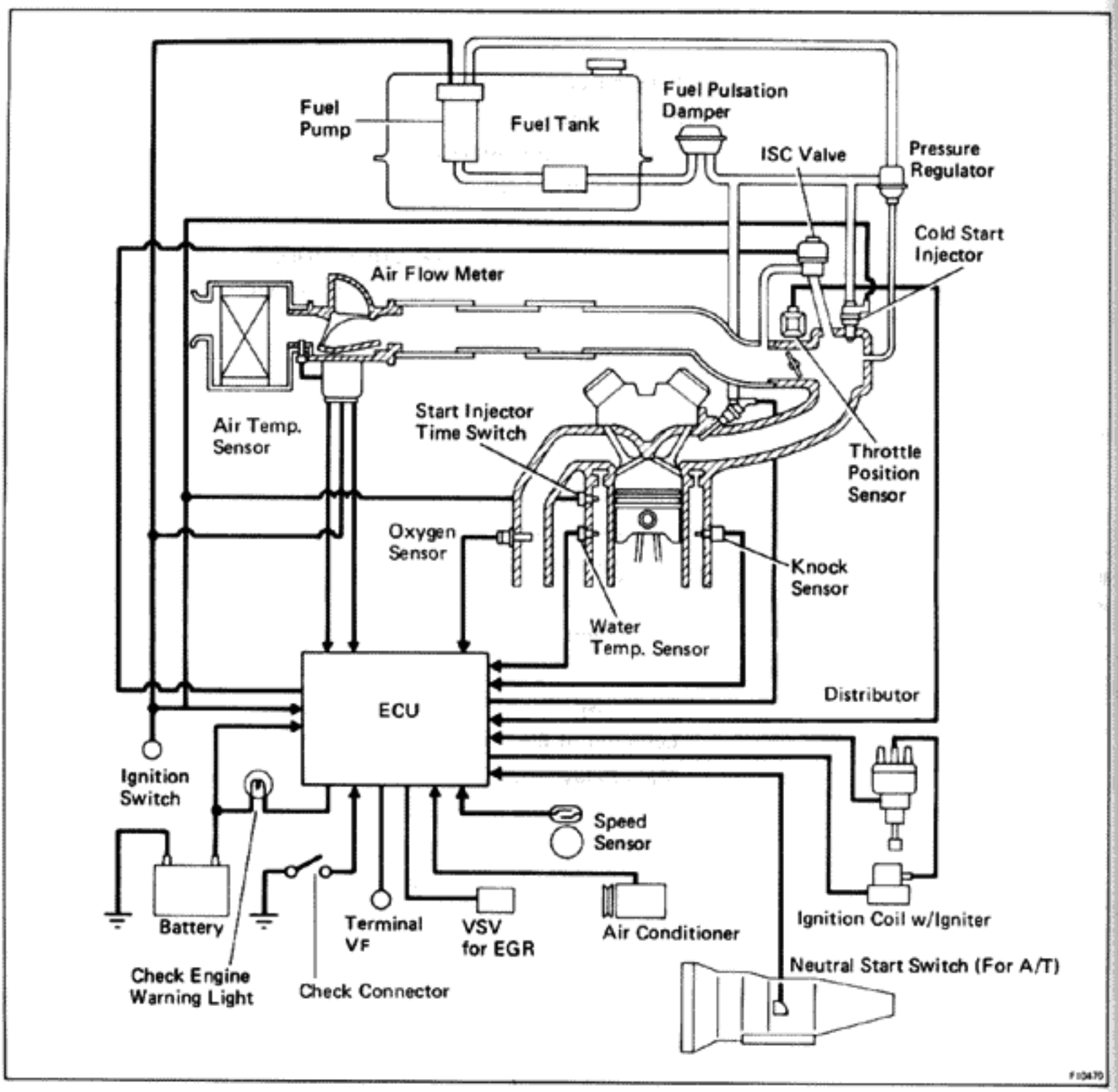

The EFI used on Toyotas has three basic systems.

FUEL SYSTEM

An electric fuel pump supplies sufficient fuel, under a constant pressure, to the EFI injectors. These injectors inject a metered quantity of fuel into the intake manifold in accordance with signals from the ECU. Each injector injects, at the same time, one half of the fuel required for ideal combustion with each engine revolution.

AIR INDUCTION SYSTEM

The air induction system provides sufficient air for engine operation.

ELECTRONIC CONTROL SYSTEM

The 5M-GE engine is equipped with a Toyota Computer Control System (TCCS) which centrally controls the EFI, ESA, EGR, Diagnosis systems, etc. by means of an Electronic Control Unit (ECU – formerly EFI computer) employing a microcomputer.

By means of the ECU, the TCCS controls the following functions:

1. Electronic Fuel Injection (EFI)

   The ECU receives signals from various sensors indicating changing engine operating conditions such as:

   Intake air volume
   Intake air temperature
   Coolant temperature
   Engine rpm
   Acceleration/deceleration
   Exhaust oxygen content etc.

   These signals are utilized by the ECU to determine the injection duration necessary for an optimum air-fuel ratio.

2. Electronic Spark Advance (ESA)

   The ECU is programmed with data for optimum ignition timing under any and all operating conditions. Using data provided by sensors which monitor various engine functions (rpm, intake air volume, coolant temperature, etc.), the microcomputer (ECU) triggers the spark at precisely the right instant.
   (See IG section)

3. Idle Speed Control (ISC)

   The ECU is programmed with target engine speed values to respond to different engine conditions (coolant temperature, air conditioner on/off, etc.). Sensors transmit signals to the ECU which controls the flow of air through the by-pass of the throttle valve and adjusts idle speed to the target value.
   (See pages FI-43,60)

4. Exhaust Gas Recirculation (EGR)

   The ECU detects the coolant temp. and controls EGR function accordingly.
   (See page EC-10)

5. Electronic Controlled Transmission (ECT) (Automatic Trans. only)

   A serial signal is transmitted to the ECT computer to prevent shift up to 3rd or overdrive during cold engine operation.
   (See AT section)

6. Diagnostics

   The ECU detects any malfunctions or abnormalties in the sensor network and lights a "CHECK ENGINE" warning light on the instrument panel. At the same time, the trouble is identified and a diagnostic code is recorded by the ECU. The diagnostic code can be read by the number of blinks of the "CHECK ENGINE" warning light when check connector are short-circuited.
   (See page FI-22)

7. Fail-Safe Function

   In the event of a computer malfunction, a back-up circuit will take over to provide minimal drivability. Simultaneously, the "CHECK ENGINE" warning light is activated.

PRECAUTIONS

1. **Before working on the fuel system, disconnect the negative terminal from the battery.**

   NOTE: Any diagnosis code retained by the computer will be cleared when the battery terminal is removed. Therefore, if necessary, read the diagnosis before removing the battery terminal.

2. **When working on the fuel system, do not smoke or work near any fire.**

3. **Keep gasoline off rubber or leather parts.**

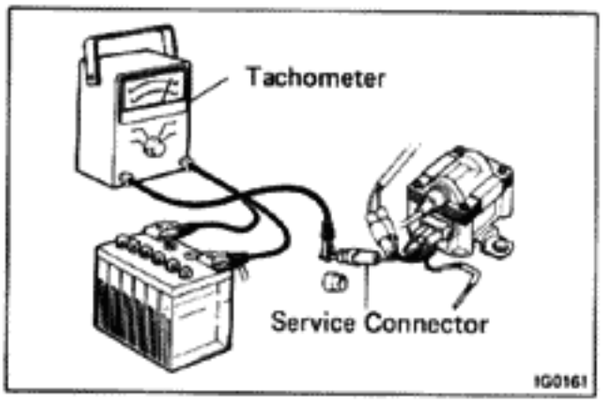

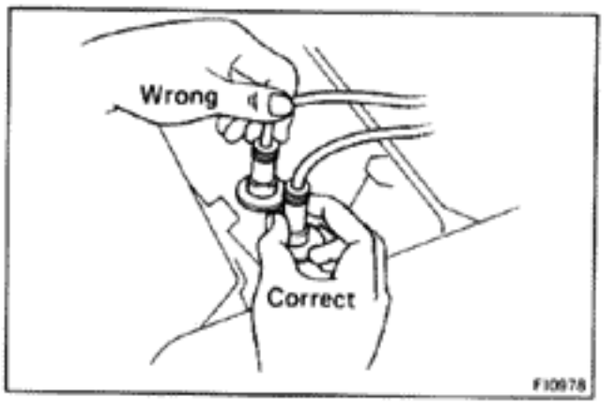

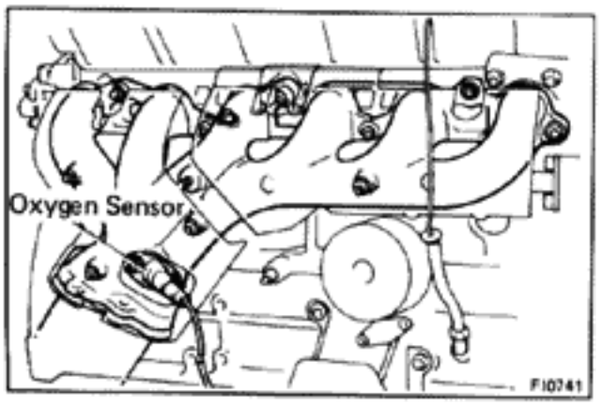

INSPECTION PRECAUTIONS

MAINTENANCE PRECAUTIONS

1. **INSURE CORRECT ENGINE TUNE-UP**

2. **PRECAUTIONS WHEN CONNECTING GAUGE**
   (a) Connect the tachometer to the service connector.
   (b) Use the battery as the power source for the timing light, tachometer, etc.

3. **IN EVENT OF ENGINE MISFIRE, THE CATALYTIC CONVERTER MAY OVERHEAT. THEREFORE, THE FOLLOWING PRECAUTIONS SHOULD BE TAKEN**
   (a) Insure correct drive belt adjustment.
   (b) Insure proper connection of battery terminals, etc.
   (c) Handle resistor cords carefully.
   (d) After repair work, insure that the ignition coil terminals and all other ignition system lines are reconnected securely.
   When cleaning the engine compartment, be especially careful to protect the electrical system from water.

4. **PRECAUTIONS WHEN HANDLING OXYGEN SENSOR**
   (a) Do not allow oxygen sensor to drop or hit against an object.
   (b) Do not allow water to come into contact with the sensor or attempt to cool it.

WHEN CAR IS EQUIPPED WITH A MOBILE RADIO SYSTEM (HAM, CB, ETC.)

The ECU has been designed so that it will not be affected by outside interference.
However, if your vehicle is equipped with an amateur radio transceiver, etc.
You must be observe the following precautions.

(a) Install the antenna as far as possible from the ECU. The ECU is located behind the glove box so the antenna should be installed at the rear, left side of the vehicle.
If installing in the bumper, do so on the left side, if possible.

(b) Keep the antenna feeder as far away as possible from the ECU wires — at least 20 cm (7.87 in.) — and, especially, do not wind them together.

(c) Insure that the feeder and antenna are properly adjusted.

(d) Do not equip your vehicle with a powerful mobile radio system.

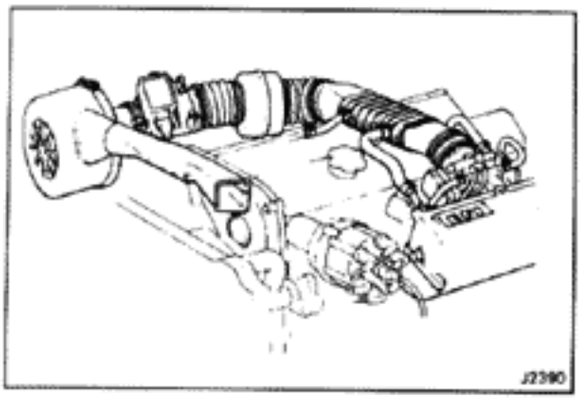

AIR INDUCTION SYSTEM

1. Separation of the engine oil level gauge, oil filler cap. PCV hose, etc. may cause the engine to run out of tune.

2. Disconnection, looseness or cracks in the parts of the air intake system between the air flow meter and cylinder head will allow air suction and cause bad engine tune.

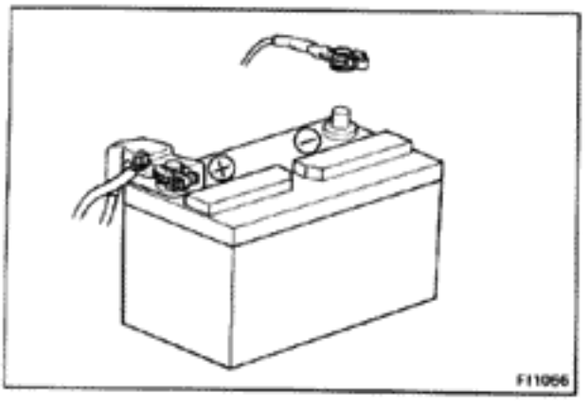

ELECTRONIC CONTROL SYSTEM

1. Before removing EFI wiring connectors, terminals, etc., first disconnect power by either turning OFF the ignition switch or disconnecting the battery terminals.
2. When installing a battery, be especially careful not to incorrectly connect the positive and negative cables.
3. Do not permit parts to receive a severe impact during removal or installation. Handle all EFI parts carefully and, in particular, the ECU.
4. Do not be careless during troubleshooting as there are numerous transistor circuits and even slight terminal contact can cause further troubles.
5. Do not open the ECU cover.
6. When inspecting during rainy weather, take care to prevent entry of water. Also, when washing the engine compartment, prevent water from getting on the EFI parts and wiring connectors.
7. Parts should be replaced as an assembly.

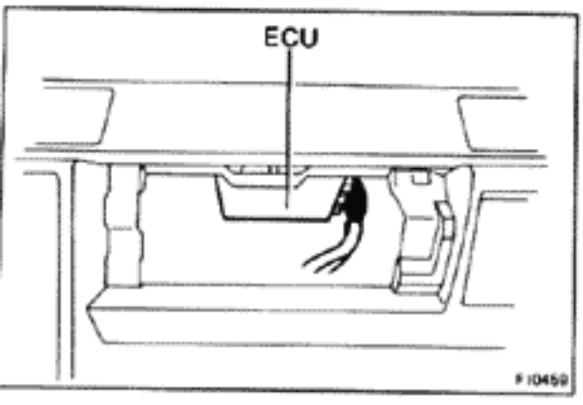

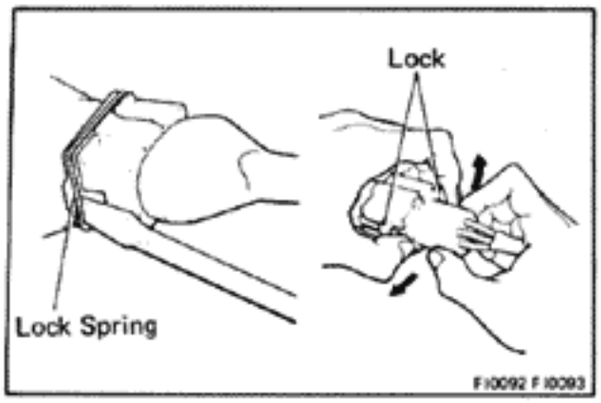

8. Sufficient care is required when pulling out and inserting wiring connectors.
   (a) Release the lock and pull out the connector, pulling on the connectors.

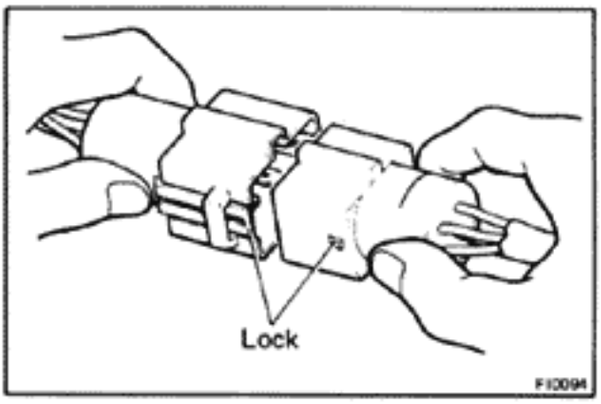

   (b) Fully insert the connector and insure that it is locked.

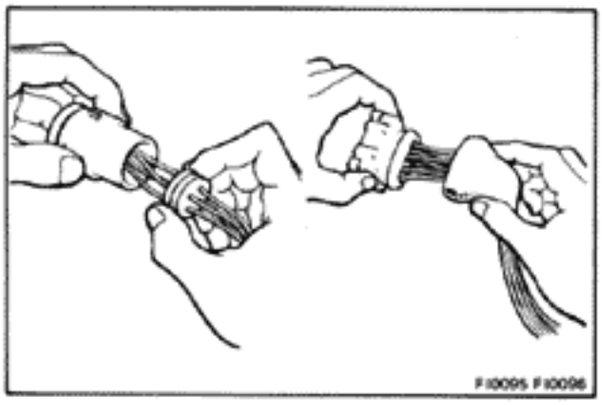

9. When inspecting a connector with a volt/ohmmeter.
   (a) Carefully take out the water-proofing rubber if it is a water-proof type connector.

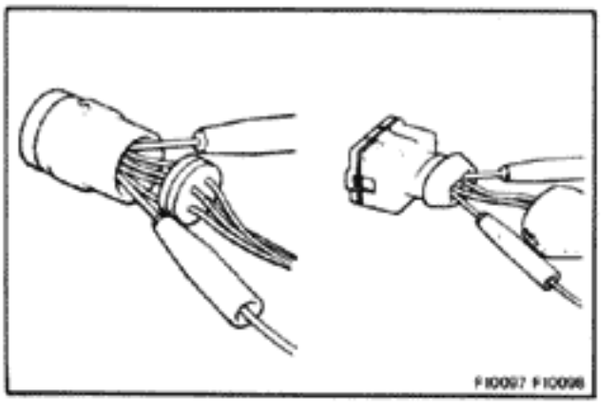

   (b) Insert the tester probe into the connector from the wiring side when checking the continuity, amperage or voltage.
   (c) Do not apply unnecessary force to the terminal.
   (d) After checking, install the water-proofing rubber on the connector securely.

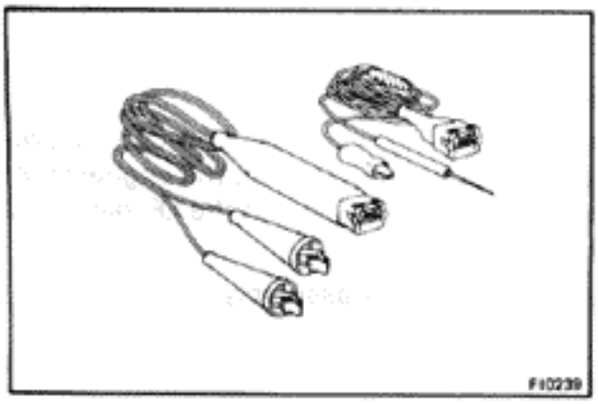

10. Use SST for inspection or test of the injector, cold start injector or its wiring connector.
    SST 09842-30020 and 09842-30050

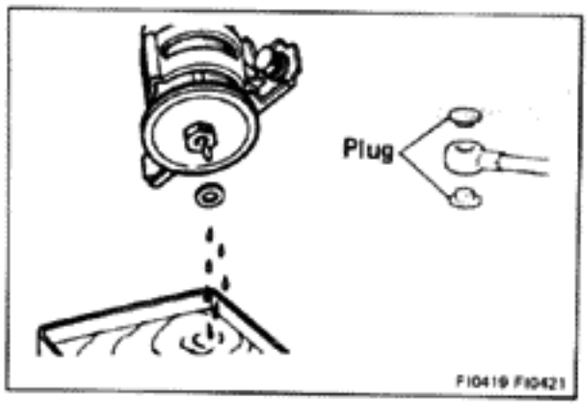

FUEL SYSTEM

1. When disconnecting high fuel pressure line the connection, a large amount of gasoline will come out, so observe the following procedure.
   (a) Put a container under the connection.
   (b) Slowly loosen the connection.
   (c) Disconnect the connection.
   (d) Plug the connection with a rubber plug.

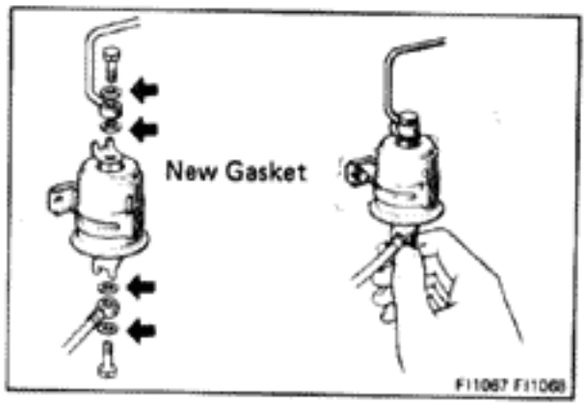

2. When connecting the flare nut or union bolt on the high pressure pipe union, observe the following procedure.
   [Union bolt type]
   (a) Always use a new gasket.
   (b) First tighten the union bolt by hand.
   (c) Then tighten the bolt to the specified torque.
   Torque: 300 kg-cm (22 ft-lb, 29 N·m)

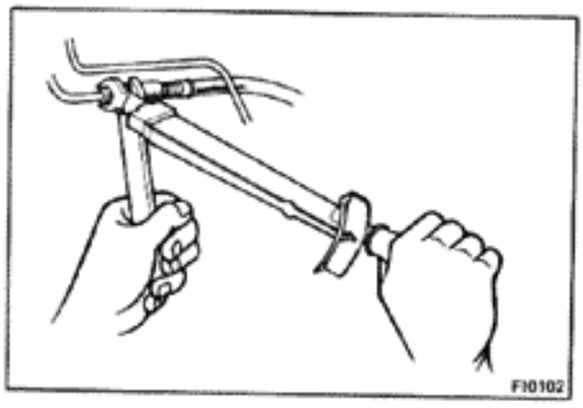

[Flare nut type]
(a) Apply a thin coat of oil to the flare and first tighten the flare nut by hand.
(b) Then tighten the nut to the specified torque.
Torque: 350 kg-cm (25 ft-lb, 34 N·m)

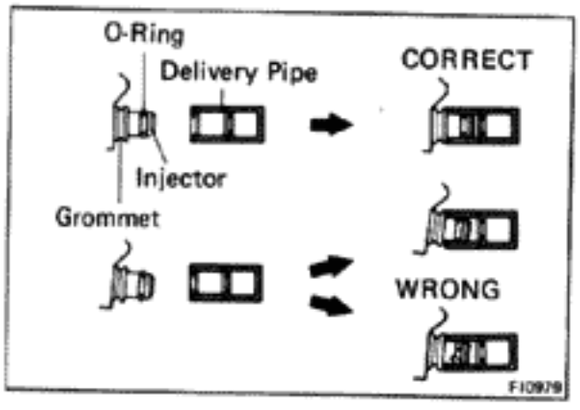

3. Take the following precautions when removing and installing the injectors.
   (a) Never re-use an O-ring.
   (b) When placing an O-ring on the injector, use care not to damage it in any way.
   (c) Lubricate the O-ring with spindle oil or gasoline before installing — never use engine, gear or brake oil.

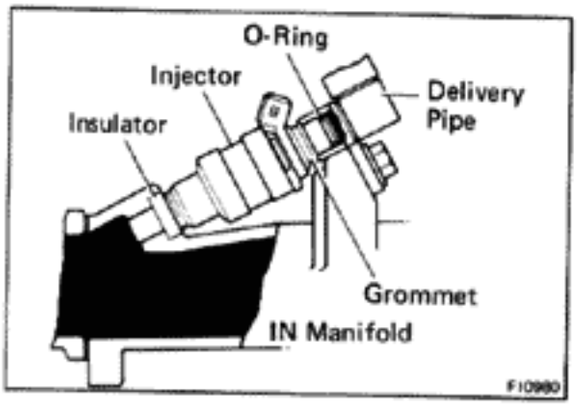

4. Install the injector to the delivery pipe and intake manifold as shown in the figure.

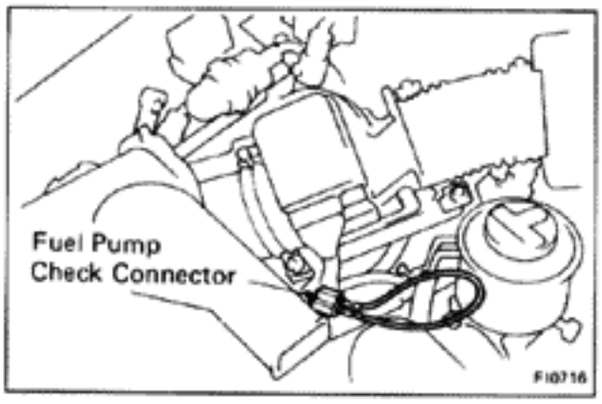

5. Confirm that there are no fuel leaks after performing maintenance on the fuel system.
   (a) With engine stopped, turn the ignition switch on.
   (b) Short circuit terminals of the fuel pump check connector.

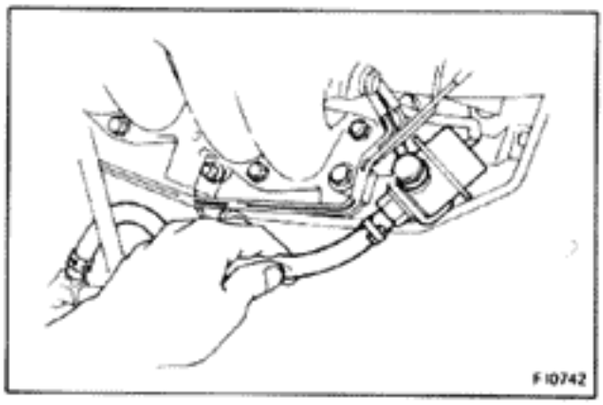

   (c) When the pressure regulator fuel return hose (shown in the figure at left), is pinched, the pressure within the high pressure line will rise to about 4 kg/cm² (57 psi, 392 kPa). In this state, check to see that there are no leaks from any part of the fuel system.

CAUTION: Always pinch the hose. Avoid bending as it may cause the hose to crack.

TROUBLESHOOTING

TROUBLESHOOTING HINTS

1. Engine troubles are usually not caused by the EFI system. When troubleshooting, always first check the condition of the other systems.
   (a) Electronic source
      - Battery
      - Fusible links
      - Fuses
   (b) Body ground
   (c) Fuel supply
      - Fuel leakage
      - Fuel filter
      - Fuel pump
   (d) Ignition system
      - Spark plug
      - High-tension cord
      - Distributor
      - Igniter and ignition coil
   (e) Air intake system
      - Vacuum leaks
   (f) Emission control system
      - EGR system
      - PCV system
   (g) Others
      - Ignition timing (ESA system)
      - Idle speed (ISC system)
      - etc.

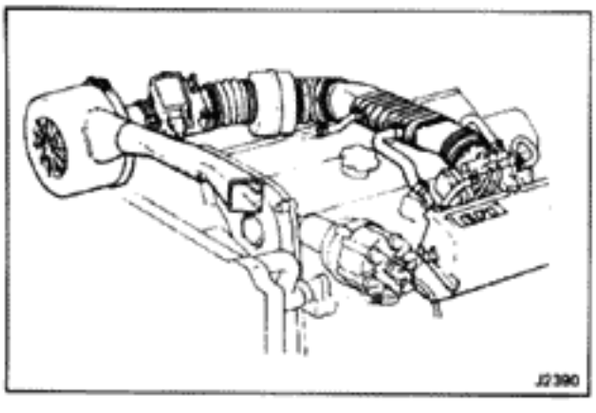

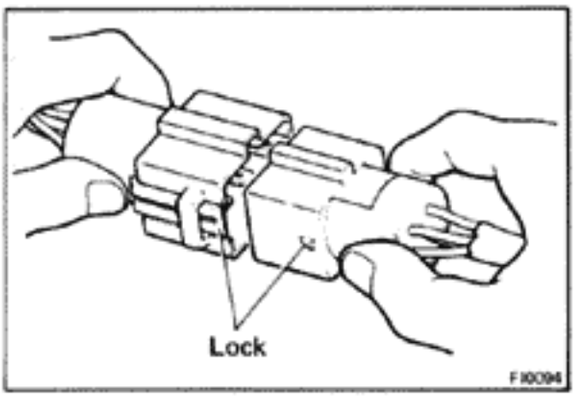

2. The most frequent cause of problems is simply a bad contact in wiring connectors. So always make sure that connections are secure.

   When inspecting the connector, pay particular attention to the following points:

   (a) Check to see that the terminals are not bent.

   (b) Check to see that the connector is pushed in completely and locked.

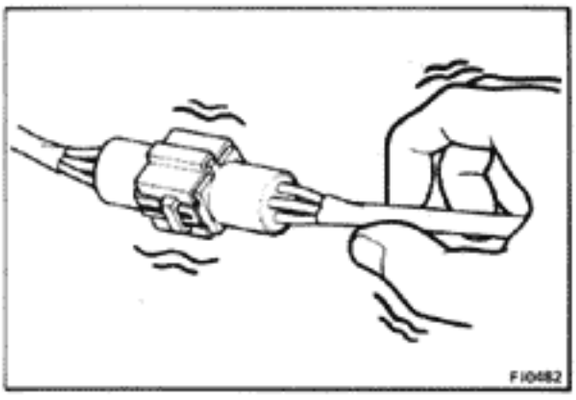

   (c) Check to see that there is no signal change when the connector is slightly tapped or wiggled.

3. Sufficiently troubleshoot for other causes before replacing the computer. The computer is of high quality and it is expensive.

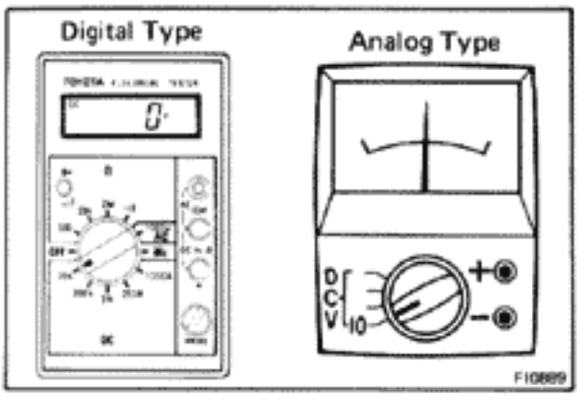

4. Use volt/ohmmeter with high-impedance (10 kΩ/V minimum).

TROUBLESHOOTING PROCEDURES
SYMPTOM — DIFFICULT TO START OR NO START (ENGINE WILL NOT CRANK OR CRANKS SLOWLY)

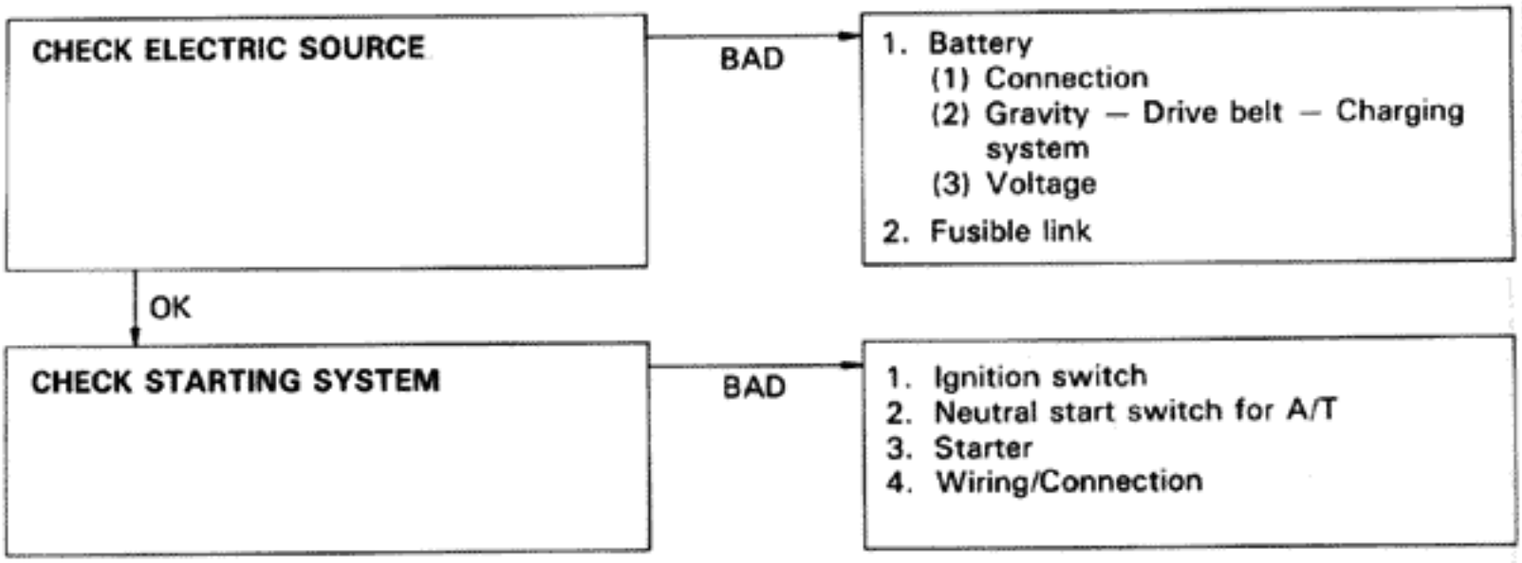

SYMPTOM — DIFFICULT TO START OR NO START (CRANKS OK)

CHECK DIAGNOSIS SYSTEM
Check for output of diagnostic code. (See page FI-22)

Malfunction code(s) → Diagnostic code(s) (See page FI-25)

Normal code ↓

DOES ENGINE START WITH ACCELERATOR PEDAL DEPRESSED?

OK → ISC system
(1) ISC valve
(2) Wiring connection (+B ISC valve ECU)

NO ↓

CHECK FOR VACUUM LEAKS IN AIR INTAKE LINE

BAD →
1. Oil filler cap
2. Oil level gauge
3. Hose connections
4. PCV hoses
5. EGR system — EGR valve stays open

OK ↓

CHECK IGNITION SPARK
1. Unplug connectors of injector resistor and start injector time switch.
2. Check by holding spark plug wire 8 — 10 mm (0.31 — 0.39 in.) away from engine block while engine is cranking. A strong spark should be noted.

BAD →
1. Plug wires
2. High-tension cords
3. Distributor
4. Ignition coil, igniter

OK ↓

CHECK IGNITION TIMING
1. Short both terminals of the check connector.
2. Check ignition timing.
   STD: 10° BTDC (w/short terminals of the check connector)

NO → Adjust ignition timing. (See page IG-9)

OK ↓

CHECK FUEL SUPPLY TO INJECTOR
1. Fuel in tank bad
2. Fuel pressure in fuel line
   (1) Short fuel pump check terminals.
   (2) Fuel pressure at fuel hose of fuel filter can be felt. (See page FI-45)

BAD →
1. Fuel line — leakage — deformation
2. Fuse
3. Circuit opening relay (See page FI-69)
4. Fuel pump (See page FI-44)
5. Fuel filter
6. Fuel pressure regulator (See page FI-52)

OK ↓

CHECK FUEL PUMP SWITCH IN AIR FLOW METER
Check continuity between terminals Fc and E_1 while measuring plate of air flow meter is open.

BAD → Air flow meter (See page FI-58)

OK CONTINUED ON PAGE FI-12

OK CONTINUED FROM PAGE FI-11

CHECK SPARK PLUGS
Max. allowable gap: 1.4 mm (0.055 in.)
Correct insulation resistance:
10 MΩ or more

Precaution: Never attempt to adjust gap on used platinum tipped spark plug.

— Note —

Check compression pressure if necessary. (See page EM-6)

NO →
1. Spark plug
2. Compression pressure
   Limit: 9.0 kg/cm² (128 psi, 883 kPa) at 250 rpm

NO (All Plugs WET) →
1. Injector(s) — shorted or leaking
2. Injector wiring(s) between resistor and ECU shorted
3. Cold start injector — leakage (See page FI-49)
4. Start injector time switch (See page FI-71)

OK ↓

CHECK EFI ELECTRONIC CIRCUIT USING VOLT/OHMMETER

NO →
1. Wiring connection
2. Power to ECU
   (1) Fusible link
   (2) Fuse
   (3) No. 1 and No. 2 main relay
3. Air flow meter
4. Water temp. sensor
5. Injection signal circuit
   (1) Injector wiring
   (2) Resistor
   (3) ECU

SYMPTOM — ENGINE OFTEN STALLS

CHECK DIAGNOSIS SYSTEM
Check for output of diagnostic code
(See page FI-22)

Malfunction code(s) → Diagnostic code(s) (See page FI-25)

Normal code ↓

CHECK FOR VACUUM LEAKS IN AIR INTAKE LINE

BAD →
1. Oil filler cap
2. Oil level gauge
3. Hose connections
4. PCV hoses
5. EGR system — EGR valve stays open

OK ↓

CHECK FUEL SUPPLY TO INJECTOR
1. Fuel in tank
2. Fuel pressure in fuel line
   (1) Short fuel pump check terminals.
   (2) You can feel fuel pressure at fuel hose.
   (See page FI-45)

BAD →
1. Fuel line — leakage — deformation
2. Fuse
3. Circuit opening relay (See page FI-69)
4. Fuel pump (See page FI-44)
5. Fuel filter
6. Fuel pressure regulator (See page FI-52)

OK ↓

CHECK AIR FILTER ELEMENT

BAD → Element — clean or replace

OK ↓

CHECK IDLE SPEED
STD: 650 rpm

BAD →
ISC system
(1) Wiring connection
(2) ISC valve
(3) ECU (test by substitution)

OK ↓

CHECK IGNITION TIMING
1. Short both terminals of the check connector.
2. Check ignition timing.
   STD: 10° BTDC
   (w/short terminals of the check connector)

NO → Adjust ignition timing

OK ↓

CHECK SPARK PLUGS
Max. allowable gap: 1.4 mm (0.055 in.)
Precaution: Never attempt to adjust gap on used platinum tipped spark plug.
— Note —
Check compression pressure if necessary.
(See page EM-6)

NO →
1. Spark plug
2. Compression pressure
   Limit: 9.0 kg/cm² (128 psi, 883 kPa) at 250 rpm

OK ↓

CHECK COLD START INJECTOR
(See page FI-49)

BAD →
1. Cold start injector
2. Start injector time switch
   (See page FI-71)

OK CONTINUED ON PAGE FI-14 ↓

OK CONTINUED FROM PAGE FI-13

CHECK FUEL PRESSURE
(See page FI-45)

BAD →
1. Fuel pump (See page FI-44)
2. Fuel filter
3. Fuel pressure regulator (See page FI-52)

OK ↓

CHECK INJECTORS
(See page FI-53)

BAD → Injection condition

OK ↓

CHECK EFI ELECTRONIC CIRCUIT USING VOLT/OHMMETER

BAD →
1. Wiring connection
2. Power to ECU
   (1) Fusible link
   (2) No. 1 and No. 2 main relay
3. Air flow meter
4. Water temp. sensor
5. Injection signal circuit
   (1) Injector wiring
   (2) Resistor
   (3) ECU

SYMPTOM — ENGINE SOMETIMES STALLS

CHECK DIAGNOSIS SYSTEM
Check for output of diagnostic code.
(See page FI-22)

Malfunction code(s) → Diagnostic code(s) (See page FI-25)

Normal code ↓

CHECK AIR FLOW METER
(See page FI-58)

BAD → Air flow meter

OK ↓

CHECK WIRING CONNECTORS AND RELAYS
Check that there is a signal change when the connector or relay is slightly tapped or wiggled.

BAD →
1. Connector
2. No.1 and No. 2 main relay (See page FI-68)
3. Circuit opening relay (See page FI-69)

SYMPTOM — ROUGH IDLING AND/OR MISSING

CHECK DIAGNOSIS SYSTEM
Check for output of diagnostic code.
(See page FI-22)

→ Malfunction code(s) → Diagnostic code(s) (See page FI-25)

↓ Normal code

CHECK FOR VACUUM LEAKS IN AIR INTAKE LINE

→ BAD →
1. Oil filler cap
2. Oil level gauge
3. Hose connections
4. PCV hoses
5. EGR system — EGR valve stays open

↓ OK

CHECK AIR FILTER ELEMENT

→ BAD → Element — clean or replace

↓ OK

CHECK IDLE SPEED
STD: 650 rpm

→ BAD →
ISC system
(1) Wiring connection
(2) ISC valve
(3) ECU (test by substitution)

↓ OK

CHECK IGNITION TIMING
1. Short both terminals of the check connector.
2. Check ignition timing.
   STD: 10° BTDC (w/short terminals of the check connector)

→ NO → Ignition system

↓ OK

CHECK SPARK PLUGS
Max. allowable gap: 1.4 mm (0.055 in.)
Precaution: Never attempt to adjust gap on used platinum tipped spark plug.
— Note —
Check compression pressure if necessary.
(See page EM-6)

→ NO →
1. Spark plug
2. Compression pressure
   Limit: 9.0 kg/cm² (128 psi, 883 kPa) at 250 rpm

↓ OK

CHECK COLD START INJECTOR
(See page FI-49)

→ BAD →
1. Cold start injector
2. Start injector time switch (See page FI-71)

↓ OK CONTINUED ON PAGE FI-16

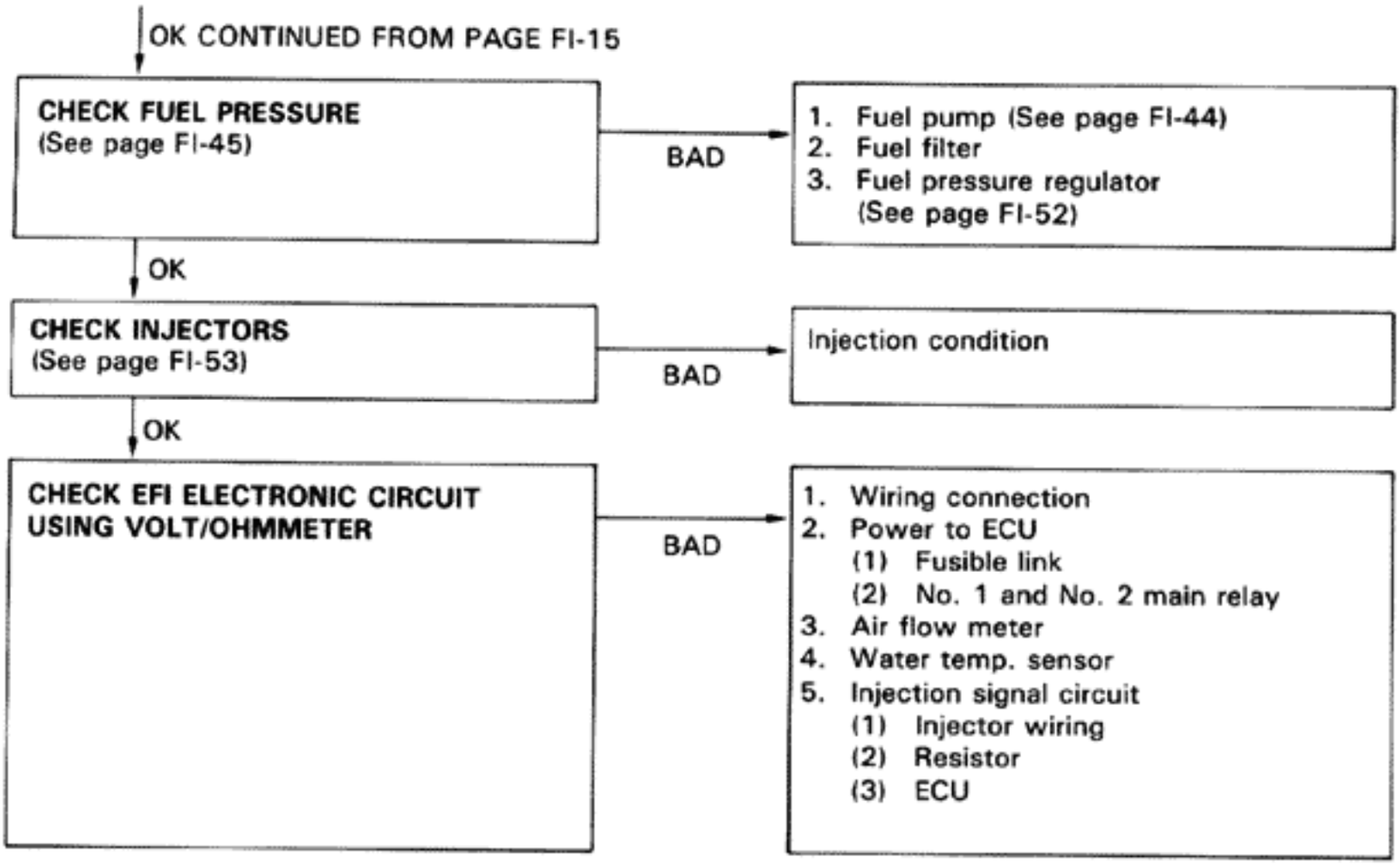
OK CONTINUED FROM PAGE FI-15
CHECK FUEL PRESSURE
(See page FI-45)
BAD
1. Fuel pump (See page FI-44)
2. Fuel filter
3. Fuel pressure regulator
(See page FI-52)
OK
CHECK INJECTORS
(See page FI-53)
BAD
Injection condition
OK
CHECK EFI ELECTRONIC CIRCUIT
USING VOLT/OHMMETER
BAD
1. Wiring connection
2. Power to ECU
(1) Fusible link
(2) No. 1 and No. 2 main relay
3. Air flow meter
4. Water temp. sensor
5. Injection signal circuit
(1) Injector wiring
(2) Resistor
(3) ECU

SYMPTOM — HIGH ENGINE IDLE SPEED (NO DROP)

CHECK ACCELERATOR LINKAGE → BAD → Linkage — stuck dash pot system

OK ↓

CHECK DIAGNOSIS SYSTEM
Check for output of diagnostic code.
(See page FI-22)
→ Malfunction code(s) → Diagnostic code(s) (See page FI-25)

Normal code ↓

CHECK ISC SYSTEM → BAD →
1. Wiring connection (Air con, Throttle position sensor — ECU)
2. ISC valve
3. Air conditioner switch

OK ↓

CHECK THROTTLE POSITION SENSOR → BAD → Throttle body

OK ↓

CHECK FUEL PRESSURE
(See page FI-45)
→ BAD → Fuel pressure regulator — high pressure

OK ↓

CHECK COLD START INJECTOR
(See page FI-49)
→ BAD → Cold start injector — leakage

OK ↓

CHECK INJECTORS (See page FI-53) → BAD → Injectors — leakage, injection quantity

OK ↓

CHECK EFI ELECTRONIC CIRCUIT USING VOLT/OHMMETER → BAD →
1. Wiring connection
2. Power to ECU
   (1) Fusible link
   (2) No. 1 and No. 2 main relay
3. Air flow meter
4. Water temp. sensor
5. Air temp. sensor
6. Injection signal circuit
   (1) Injector wirings
   (2) Resistor
   (3) ECU

SYMPTOM – ENGINE BACKFIRES-Lean Fuel Mixture

CHECK DIAGNOSIS SYSTEM
Check for output of diagnostic code.
(See page FI-22)

→ Malfunction code(s) → Diagnostic code(s) (See page FI-25)

↓ Normal code

CHECK FOR VACUUM LEAKS IN AIR INTAKE LINE

→ BAD →
1. Oil filler cap
2. Oil level gauge
3. Hose connections
4. PCV hoses
5. EGR system – EGR valve stays open

↓ OK

CHECK IGNITION TIMING
1. Short both terminals of the check connector.
2. Check ignition timing.
   STD: 10° BTDC (w/short terminals of the check connector)

→ BAD → Ignition system (See page IG-2)

↓ OK

CHECK COLD START INJECTOR
(See page FI-49)

→ BAD →
1. Cold start injector
2. Start injector time switch (See page FI-71)

↓ OK

CHECK FUEL PRESSURE
(See page FI-45)

→ BAD →
1. Fuel pump (See page FI-44)
2. Fuel filter
3. Fuel pressure regulator (See page FI-52)

↓ OK

CHECK INJECTORS
(See page FI-53)

→ BAD → Injectors – clogged

↓ OK

CHECK EFI ELECTRONIC CIRCUIT USING VOLT/OHMMETER

→ BAD →
1. Wiring connection
2. Power to ECU
   (1) Fusible link
   (2) No.1 and No. 2 main relay
3. Air flow meter
4. Water temp. sensor
5. Air temp. sensor
6. Throttle position sensor
7. Injection signal circuit
   (1) Injection wirings
   (2) Resistor
   (3) ECU
   (4) Fuel cut signal
8. Oxygen sensor

SYMPTOM — MUFFLER EXPLOSION (AFTER FIRE) -Rich Fuel Mixture-Misfire

CHECK DIAGNOSIS SYSTEM
Check for output of diagnostic code.
(See page FI-22)

→ Malfunction code(s) → Diagnostic code(s) (See page FI-25)

↓ Normal code

CHECK IGNITION TIMING
1. Short both terminals of the check connector.
2. Check ignition timing.
   STD: 10° BTDC
   (w/short terminals of the check connector)

→ NO → Ignition system (See page IG-2)

↓ OK

CHECK COLD START INJECTOR
(See page FI-49)

→ BAD →
1. Cold start injector
2. Start injector time switch (See page FI-71)

↓ OK

CHECK INJECTORS

→ BAD → Injectors — leakage

↓ OK

CHECK SPARK PLUGS
Max. allowable gap: 1.4 mm (0.055 in.)
Precaution: Never attempt to adjust gap on used platinum tipped spark plug.
— Note —
Check compression pressure if necessary.
(See page EM-6)

→ NO →
1. Spark plug
2. Compression pressure
   Limit: 9.0 kg/cm² (128 psi, 883 kPa) at 250 rpm

↓ OK

CHECK EFI ELECTRONIC CIRCUIT USING VOLT/OHMMETER

→ BAD →
1. Throttle position sensor
2. Injection signal
   (1) Injector wiring
   (2) Resistor
   (3) ECU
3. Oxygen sensor

SYMPTOM — ENGINE HESITATES AND/OR POOR ACCELERATION

CHECK CLUTCH AND BRAKE
→ BAD → 1. Clutch — slips 2. Brakes — drag
↓ OK

CHECK FOR VACUUM LEAKS IN AIR INTAKE LINE
→ BAD → 1. Oil filler cap 2. Oil level gauge 3. Hose connections 4. PCV hoses 5. EGR system — EGR valve stays open
↓ OK

CHECK AIR FILTER ELEMENT
→ BAD → Clean or replace
↓ OK

CHECK DIAGNOSIS SYSTEM
Check for output of diagnostic code. (See page FI-22)
→ Malfunction code(s) → Diagnostic code(s) (See page FI-25)
↓ Normal code

CHECK IGNITION SPARK
1. Unplug connectors of injector resistor and start injection time switch.
2. Check by holding spark plug wire 8 — 10 mm (0.31 — 0.39 in.) away from engine block while engine cranking. A strong spark should be noted.

→ BAD → 1. Plug wires 2. High-tension cords 3. Distributor 4. Ignition coil, igniter
↓ OK

CHECK IGNITION TIMING
1. Short both terminals of the check connector.
2. Check ignition timing.
   STD: 10° BTDC (w/short terminals of the check connector)

→ NO → Ignition system (See page IG-2)
↓ OK

OK CONTINUED ON PAGE FI-21

OK CONTINUED FROM PAGE FI-20

CHECK FUEL PRESSURE
(See page FI-45)

BAD →
1. Fuel pump (See page FI-44)
2. Fuel filter
3. Fuel pressure regulator (See page FI-52)

OK

CHECK INJECTORS
(See page FI-53)

BAD → Injection condition

OK

CHECK SPARK PLUGS
Max. allowable gap: 1.4 mm (0.055 in.)
Precaution: Never attempt to adjust gap on used platinum tipped spark plug.
— Note —
Check compression pressure if necessary.
(See page EM-6)

NO →
1. Spark plug
2. Compression pressure
   Limit: 9.0 kg/cm² (128 psi, 883 kPa) at 250 rpm

OK

CHECK EFI ELECTRONIC CIRCUIT USING VOLT/OHMMETER

BAD →
1. Wiring connection
2. Power to ECU
   (1) Fusible link
   (2) No. 1 and No. 2 main relay
3. Air flow meter
4. Water temp. sensor
5. Air temp. sensor
6. Throttle position sensor
7. Injection signal circuit
   (1) Injector wirings
   (2) Resistor
   (3) ECU

DIAGNOSIS SYSTEM

Description

The ECU contains a built-in self-diagnosis system by which troubles with the engine signal network are detected and a "CHECK ENGINE" warning light on the instrument panel flashes (Code Nos. 12, 13, 14, 21, 22, 31, 32, 42, 52 and 53).

A "CHECK ENGINE" warning light on the instrument panel informs the driver that a malfunction has been detected. The light goes out automatically when the malfunction has been cleared.

The diagnostic code can be read by the number of blinks of the "CHECK ENGINE" warning light when terminals T and E_1 are short-circuited.

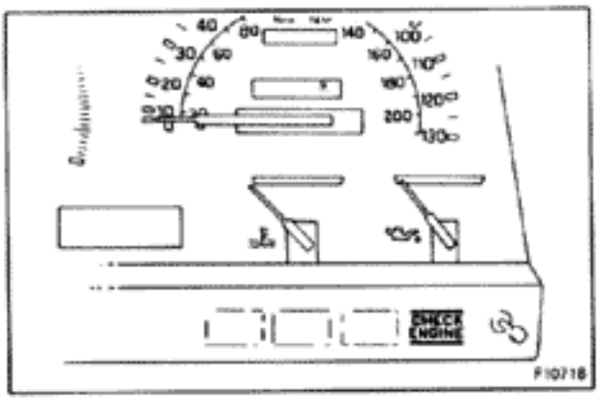

"CHECK ENGINE" WARNING LIGHT CHECK

1. The "CHECK ENGINE" warning light will come on when the ignition switch is placed at ON and the engine is not running.
2. When the engine is started, the "CHECK ENGINE" warning light should go out.

   If the light remains on, the diagnosis system has detected a malfunction in the system.

OUTPUT OF DIAGNOSTIC CODES

Initial Conditions

- Battery voltage above 11 volts.
- Throttle valve fully closed (throttle position sensor IDL points closed).
- Transmission in P or N range.
- Air conditioner switch OFF.
- Engine at normal operating temperature.

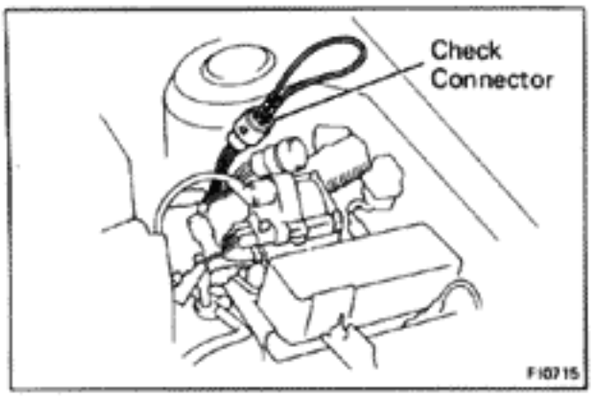

1. Turn the ignition switch to ON. Do not start the engine.
2. Using a sub-wire, short terminals of the check connector.

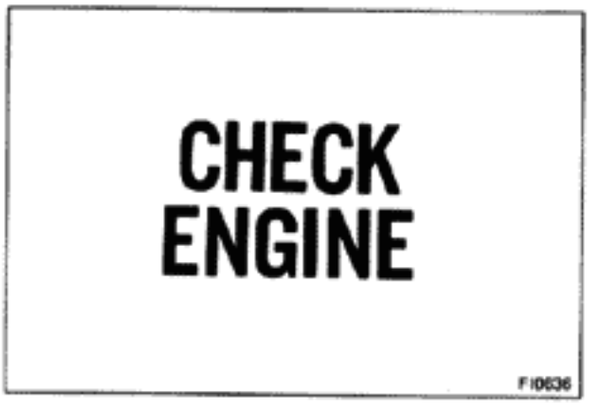

3. Read the diagnostic code as indicated by the number of flashes of the "CHECK ENGINE" warning light.

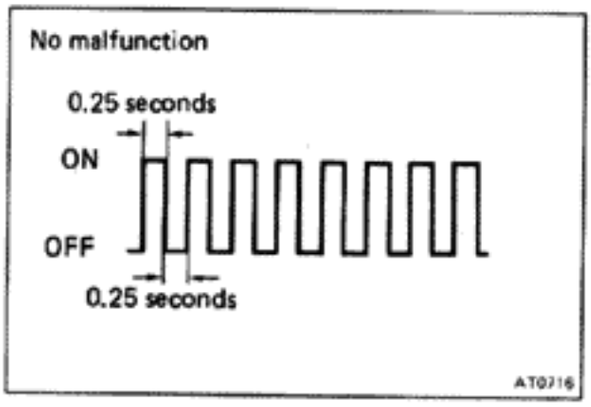

Diagnostic code

(a) If system is operating normally (no malfunction), the light will blink once every 0.25 seconds.

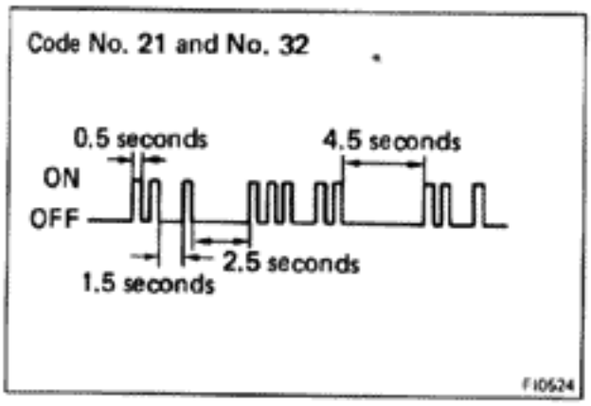

(b) In event of a malfunction, the light will blink once every 0.5 seconds. The first number of blinks will equal the first digit of a 2-digit diagnostic code. After a 1.5 second pause, the 2nd number of blinks will equal the 2nd number of a 2-digit diagnostic code. If there are two or more codes, there will be a 2.5 seconds pause between each.

NOTE : In event of a number of troubles codes, indication will begin from the smaller value and continue to the larger in order.

4. After the diagnosis check, remove the sub-wire from the check connector.

Cancelling out diagnostic code

(a) After repair of the trouble area, the diagnostic code retained in memory by the ECU must be cancelled out by removing the STOP fuse (15A) for 30 seconds or more, depending on ambient temperature (the lower the temperature, the longer the fuse must be left out) with the ignition switch off.

NOTE:

- Cancellation can also be done by removing the battery negative (−) terminal, but in this case other memory systems (radio ETR, clock, etc.) will also be cancelled out.
- If the diagnostic code is not cancelled out, it will be retained by the ECU and appear along with a new code in event of future trouble.
- If it is necessary to work on engine components requiring removal of the battery terminal, a check must first be made to see if a diagnostic code is detected.

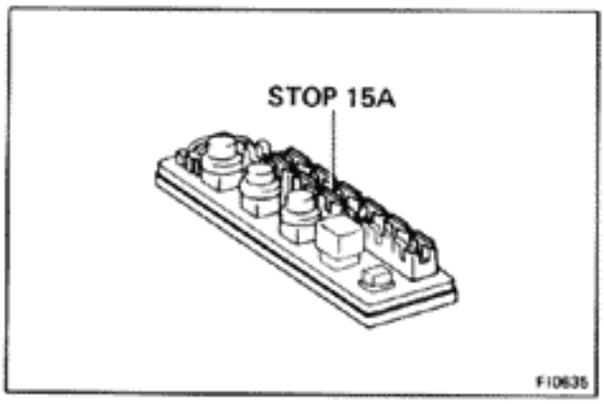

(b) After cancellation, perform a road test, if necessary, confirm that a "normal" code is now read on the "CHECK ENGINE" warning light.

If the same diagnostic code is still indicated, it indicates that the trouble area has not been repaired thoroughly.

DIAGNOSIS INDICATION

(1) Including "Normal", the ECU is programmed with the following 16 diagnostic codes.

(2) When 2 or more codes are indicated, the lowest number (code) will appear first.
However, no other code will apear along with code No. 11.

(3) All detected diagnostic codes, except 51 and 53, will be retained in memory by the ECU from the time of detection until cancelled out.

(4) Once the malfunction is cleared, the "CHECK ENGINE" warning light on the instrument panel will go out but the diagnostic code(s) remain stored in ECU memory (except for code 51).

Code No.	Light Pattern	Code No.	Light Pattern
–	ON / OFF 	31	
11		32	
12		41	
13		42	
14		43	
21		51	
22		52	
23		53	

DIAGNOSTIC CODES

Code No.	System	Diagnosis	Trouble Area	See page
	Normal	This appears when none of the other codes (11 thru 51) are identified.		
11	ECU (+ B)	Wire severence, however slight, in + B (ECU).	1. Main relay circuit 2. Main relay 3. ECU	FI-32
12	RPM Signal	No Ne, G signal to ECU within several seconds after engine is cranked.	1. Distributor circuit 2. Distributor 3. Starter signal circuit 4. ECU	IG-7
13	RPM Signal	No Ne signal to ECU within several seconds after engine reaches 1,000 rpm.	Same as 12, above.	
14	Ignition Signal	No signal from igniter six times in succession	1. Igniter circuit (+B, IGt, IGf) 2. Igniter 3. ECU	FI-42
21	Oxygen Sensor Signal	Oxygen sensor gives a lean signal for several seconds even when coolant temperature is above 50°C (122°F) and engine is running under high load conditions above 1,500 rpm.	1. Oxygen sensor circuit 2. Oxygen sensor 3. ECU	FI-73

Code No.	System	Diagnosis	Trouble Area	See page
22	Water Temp. Sensor Signal	Open or short circuit in coolant temp. sensor signal.	1. Water temp. sensor circuit 2. Water temp. sensor 3. ECU	FI-72
23	Intake Air Temp. Sensor Signal	Open or short circuit in intake air temp. sensor.	1. Intake air temp. sensor circuit 2. Intake air temp. sensor 3. ECU	FI-38
31	Air Flow Meter Signal	Open circuit in V_C signal or V_S and E_2 short circuited when idle points are closed.	1. Air flow meter circuit 2. Air flow meter 3. ECU	FI-37
32	Air Flow Meter Signal	Open circuit in E_2 or V_C and V_S short circuited.	Same as 31, above.	FI-37
41	Throttle Position Sensor Signal	Open or short circuit in throttle position sensor signal.	1. Throttle position sensor circuit 2. Throttle position sensor 3. ECU	FI-35
42	Vehicle Speed Sensor Signal	(A/T): Signal informing ECU that vehicle speed is 2.0 km/h or less has been input ECU for 5 seconds with engine running at 2,500 rpm or more and shift lever is in other than N or P range. (M/T): Signal informing ECU that vehicle speed is 2.0 km/h or less has been input ECU for 5 seconds with engine running at 2,500 rpm or more.	1. Vehicle speed sensor circuit 2. Vehicle speed sensor 3. Torque converter slipping 4. ECU	
43	Starter Signal (+ B)	No STA signal to ECU when engine is running over 800 rpm.	1. Main relay circuit 2. IG switch circuit (starter) 3. IG switch 4. ECU	FI-40
51	Switch Signal	Neutral start switch OFF or air conditioner switch ON during diagnostic check.	1. Neutral start S/W 2. Air con. S/W 3. ECU	
52	Knock Sensor Signal	Open or short circuit in knock sensor.	1. Knock sensor circuit 2. Knock sensor 3. ECU	
53	Knock Sensor Signal	Faulty ECU. (KNOCK CPU)	ECU	

INSPECTION OF DIAGNOSIS CIRCUIT

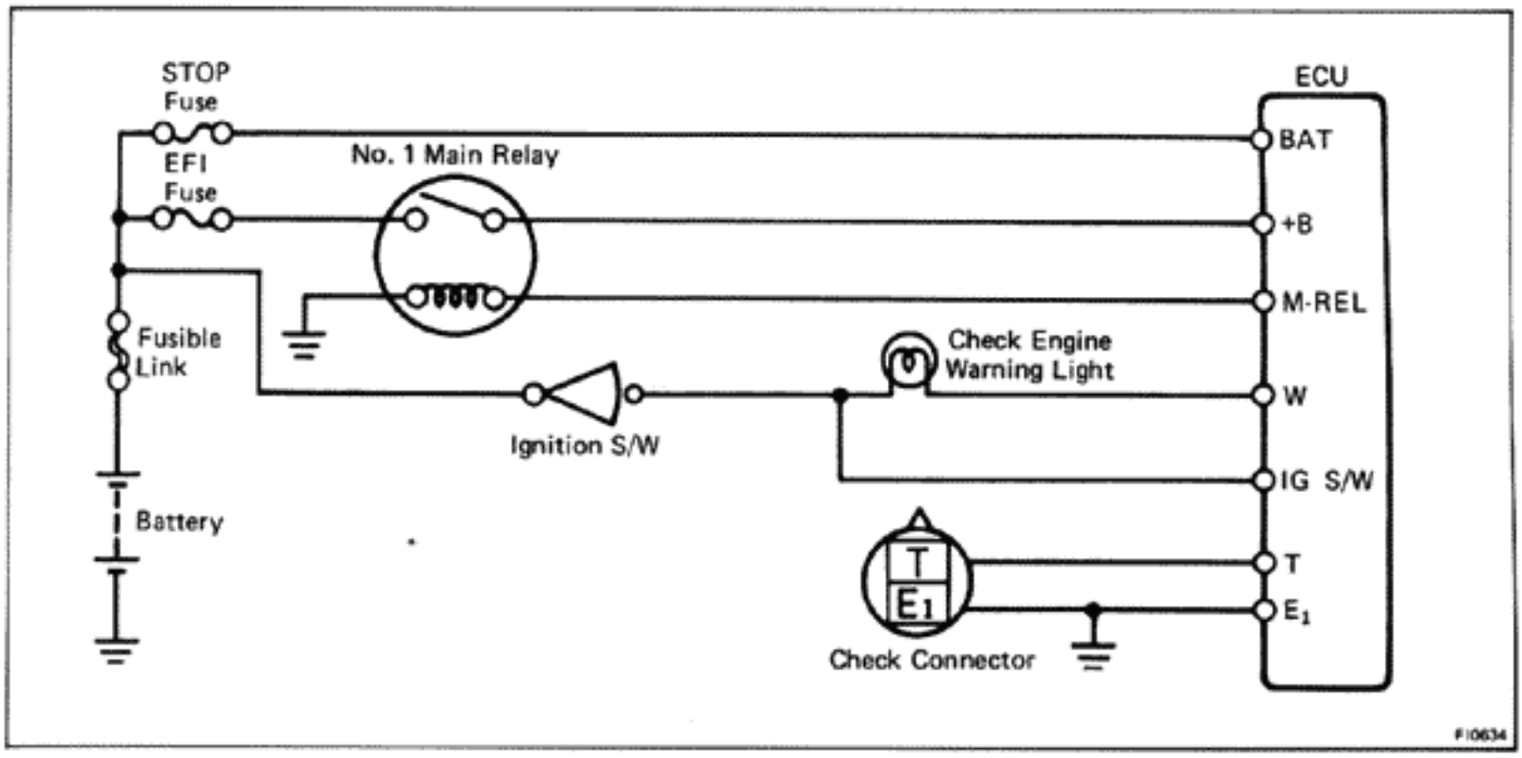

1. Does CHECK ENG. warning light come on when ignition switch is at ON?
   - YES → System Normal
   - NO → Does CHECK ENG. light come on when ECU terminal W is grounded to the body?
     - YES → Check wiring between ECU terminal E1 and body ground
       - OK → Try another ECU
       - BAD → Repair or replace
     - NO → Check bulb, fuse and wiring between ECU and ignition switch.
       - BAD → Repair or replace

2. Does CHECK ENG. warning light go OFF when engine is started?
   - YES → System Normal
   - NO → Check wiring between ECU and CHECK ENG. warning light.
     - BAD → Repair
     - OK → Is there diagnosis code output when service. connector is short circuited?
       - NO → Try another ECU
       - YES → Does CHECK ENG. warning light go out after repair according to malfunction code?
         - NO → Further repair required
         - YES → System OK → Cancel out Diagnostic code

TROUBLESHOOTING WITH VOLT/OHMMETER

PREPARATION FOR TROUBLESHOOTING

1. **Remove the glove box door and glove box.**
2. **Remove the ECU with wire harness.**

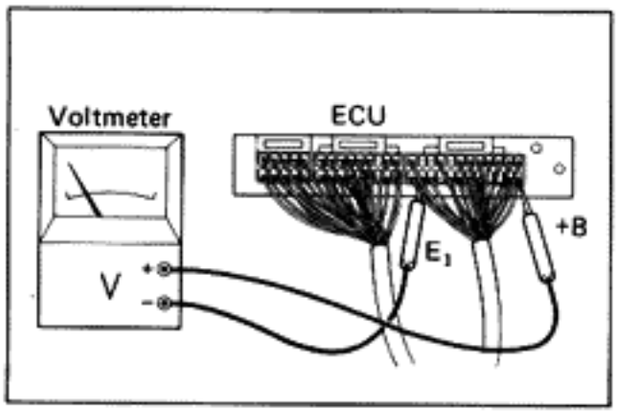

EFI SYSTEM CHECK PROCEDURE

NOTE:

1. The EFI circuit can be checked by measuring the resistance and voltage at the wiring connectors of the ECU.
2. Perform all voltage measurement with the connectors connected.
3. Verify that the battery voltage is 11V or above when the ignition switch is ON.

Using a voltmeter, measure the voltage at each terminal of the wiring connector.

NOTE: If there is any problem, see TROUBLESHOOTING FOR EFI ELECTRONIC CIRCUIT WITH VOLT/ OHMMETER.

Connectors of ECU

Symbol	Terminal Name	Symbol	Terminal Name	Symbol	Terminal Name
E_{01}	ENGINE GROUND	G⊖	ENGINE REVOLUTION SENSOR	A/C	A/C MAGNET SWITCH
E_{02}	ENGINE GROUND	V_F	CHECK CONNECTOR	SPD	SPEEDOMETER
No.10	INJECTOR	G	ENGINE REVOLUTION SENSOR	W	WARNING LIGHT
No.20	INJECTOR	T	CHECK CONNECTOR	THA	AIR TEMP. SENSOR
STA	STARTER SWITCH	VTA	THROTTLE SWITCH	V_S	AIR FLOW METER
IGt	IGNITER	Ne	ENGINE REVOLUTION SENSOR	V_C	AIR FLOW METER
EGR	EGR VSV	IDL	THROTTLE SWITCH	BAT	BATTERY +B
E_1	ENGINE GROUND	KNK	KNOCK SENSOR	IG S/W	IGNITION SWITCH
N/C	NEUTRAL START SWITCH (A/T)	IGf	IGNITER	+B	MAIN RELAY
	CLUTCH SWITCH (M/T)	Ox	OXYGEN SENSOR	TCD	ECT COMPUTER
ISC_1	ISC MOTOR NO.1 COIL	THW	WATER TEMP. SENSOR	OIL	OIL PRESSURE SWITCH
ISC_2	ISC MOTOR NO.2 COIL	E_2	SENSOR EARTH	L_1	ECT COMPUTER
ISC_3	ISC MOTOR NO.3 COIL	E_1	ENGINE GROUND	L_2	ECT COMPUTER
ISC_4	ISC MOTOR NO.4 COIL	M-REL	MAIN RELAY COIL	L_3	ECT COMPUTER

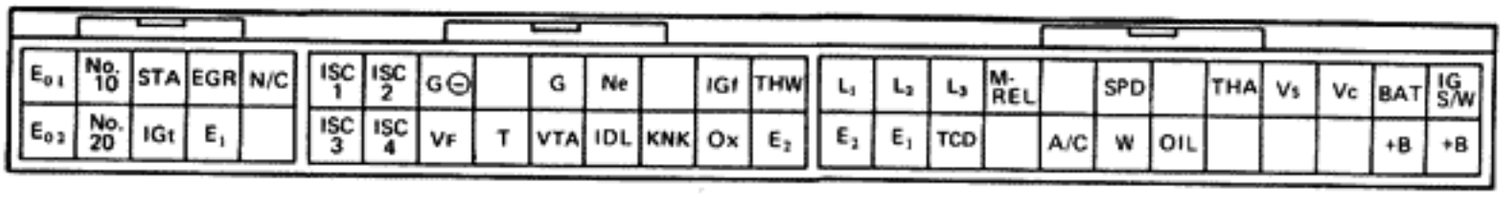

F10538

TROUBLESHOOTING FOR EFI ELECTRONIC CIRCUIT WITH VOLT/OHMMETER

NOTE: Because the following troubleshooting procedures are designed for inspection of each separate system, the actual troubleshooting procedure may vary somewhat. However, please refer to these procedures and perform actual troubleshooting, conforming to the inspection methods described in this manual.
For example, it is better to first make a simple check of the fuses, fusible links and connecting condition of the connectors before making your inspection according to the procedures listed.

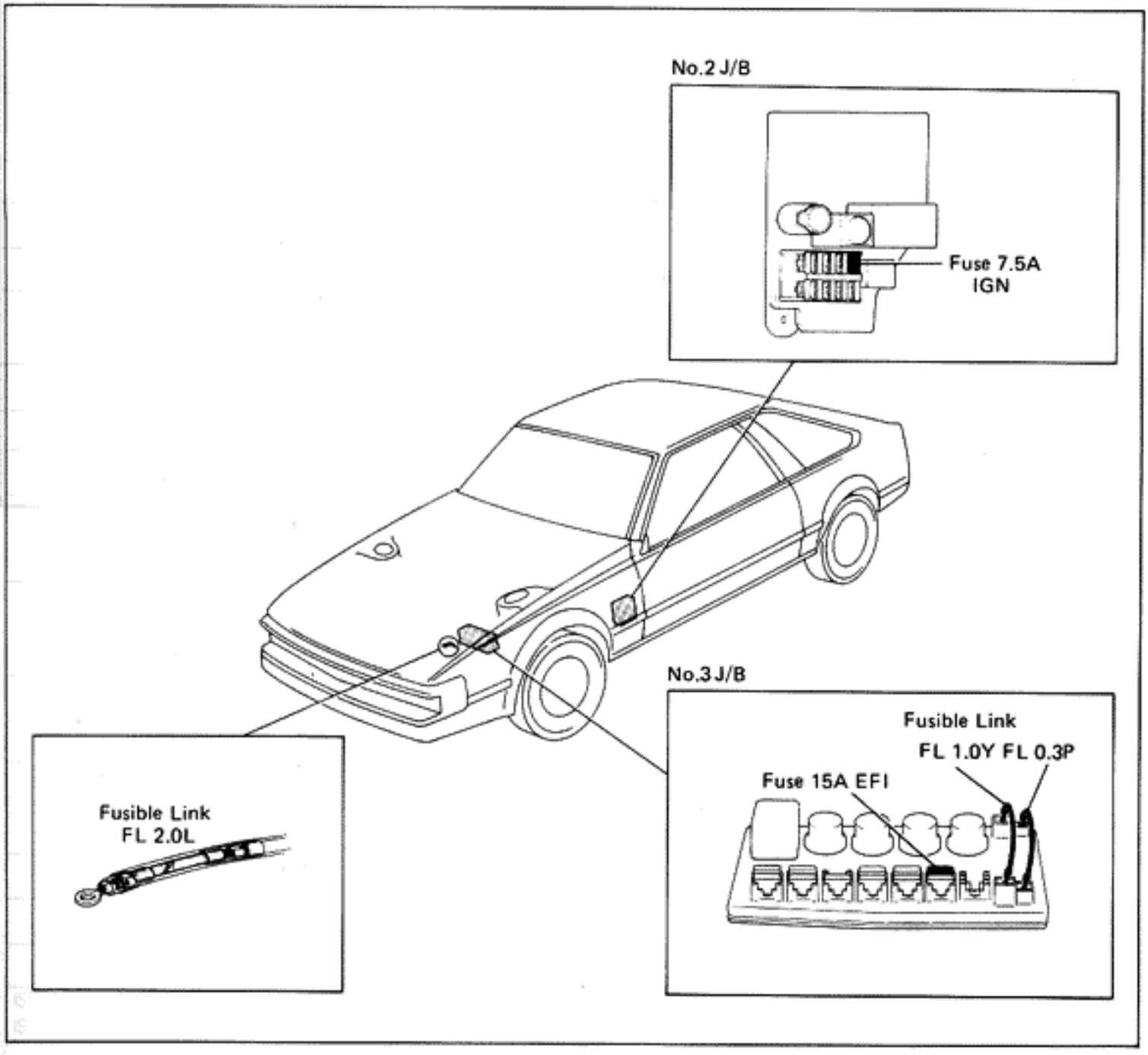

VOLTAGES AT ECU WIRING CONNECTORS

No.	Terminals	Condition		STD Voltage	See page
1	BAT — E_1	—		10 — 14	FI-32
	+B — E_1	IG S/W ON	—		FI-33
	IG S/W — E_1				
	M-REL — E_1				FI-34
2	IDL — E_2	IG S/W ON	Throttle valve open	4 — 6	FI-35
	Vc — E_2		—	4 — 6	FI-36
	VTA — E_2		Throttle valve fully closed	0.1 — 1.0	
			Throttle valve fully opened	4 — 5	
3	Vc — E_2		—	4 — 6	FI-37
	Vs — E_2		Measuring plate fully closed	4 — 5	FI-38
			Measuring plate fully open	0.02 — 0.08	
		Idling		2 — 4	
		3,000 rpm		0.3 — 1.0	
	THA — E_2	IG S/W ON	Intake air temperature 20°C (68°F)	1 — 2	FI-38
4	THW — E_2		Coolant temperature 80°C (176°F)	0.1 — 0.5	FI-39
5	STA — E_1	IG S/W ST position		6 — 12	FI-40
6	No. 10 No. 20 — E_1	IG S/W ON	—	9 — 14	FI-41
7	IGt — E_1	Cranking or Idling		0.7 — 1.0	FI-42
8	ISC_1 ~ ISC_4 — E_1	IG S/W ON	—	9 — 14	FI-43
		2 — 3 secs, after engine off		9 — 14	

INSPECTION OF WIRING CONNECTOR LINE

MEASURE RESISTANCE OF ECU

CAUTION:

1. **Do not touch the ECU terminals.**
2. **The tester probe should be inserted into the wiring connector from the wiring side.**

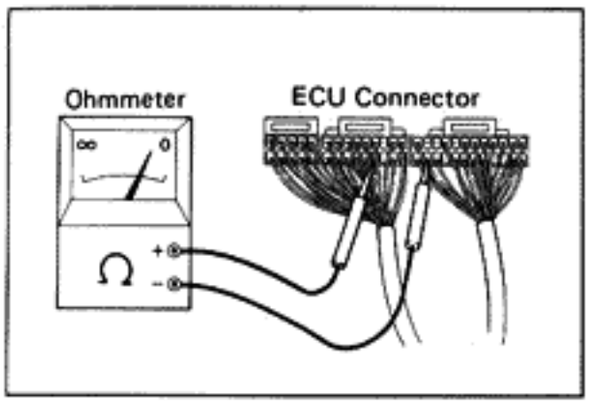

Using an ohmmeter, check the resistance between each terminal of the wiring connector.

- Remove the glove box.
- Disconnect the wiring connectors from the ECU.
- Measure the resistance between each terminal of the wiring connectors.

Resistances at ECU Wiring Connectors

Terminals	Condition	Resistance (Ω)
IDL — E_2	Throttle valve open	∞
	Throttle valve fully closed	0 — 100 Ω
VTA — E_2	Throttle valve fully opened	3,300 — 10,000
	Throttle valve fully closed	200 — 800
Vc — E_2	Disconnect air flow meter connector	3,000 — 7,000
	Disconnect throttle position sensor connector	200 — 400
Vs — E_2	Measuring plate fully closed	20 — 400
	Measuring plate fully opened	20 — 1,000
THA — E_2	Intake air temperature 20°C (68°F)	2,000 — 3,000
G — G⊖	—	140 — 180
Ne — G⊖	—	140 — 180
ISC_1, ISC_2 ISC_3, ISC_4 — +B	—	10 — 30

No.	Terminals	Trouble	Condition	STD Voltage
1	BAT — E_1	No voltage	—	10 — 14
	+B — E_1	No voltage	Ignition switch ON	10 — 14
	IG S/W — E_1	No voltage	Ignition switch ON	10 — 14
	M-REL — E_1	No voltage	Ignition switch ON	10 — 14

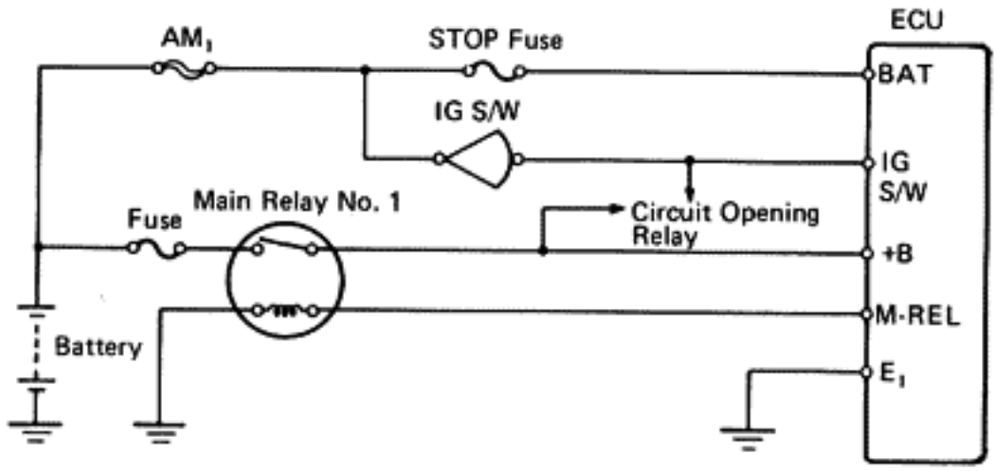

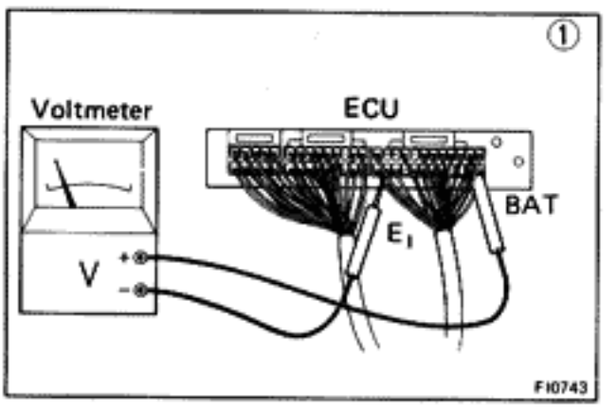

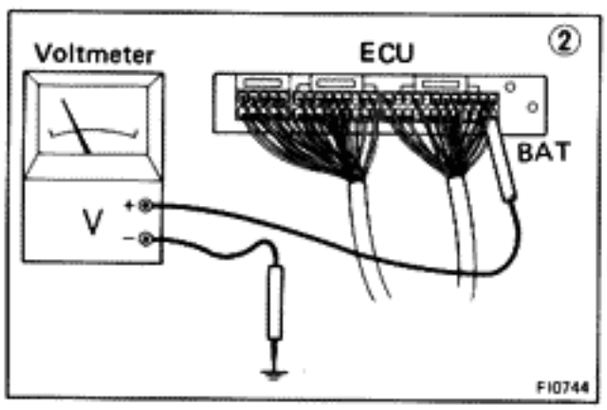

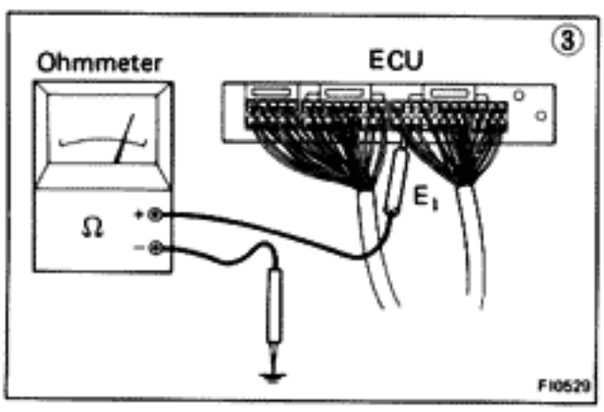

• **BAT ↔ E_1**

① There is no voltage between ECU terminals BAT and E_1.

② Check that there is voltage between ECU terminal BAT and body ground.

NO

OK

③ Check wiring between ECU terminal E_1 and body ground.

BAD

Repair or replace

Check fuse, fusible links and wiring harness.

NO

Repair

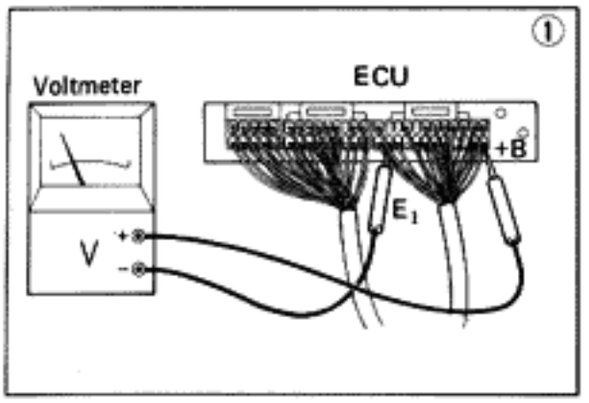

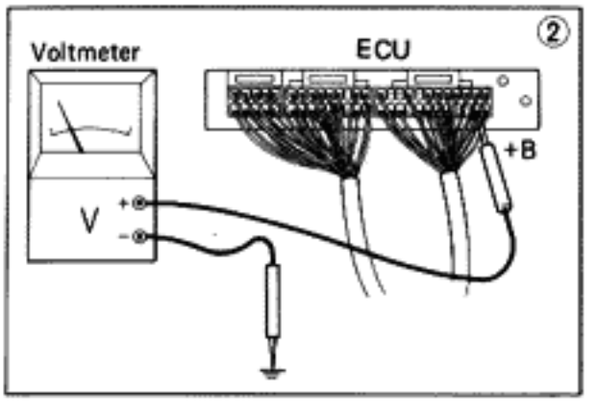

• +B ↔ E1

① There is no voltage between ECU terminals +B and E1. **(IG S/W ON)**

② Check that there is voltage between ECU terminal +B and body ground. **(IG S/W ON)**

NO

OK

Check wiring between ECU terminal E1 and body ground.

BAD

Repair or replace

Check fuse and wiring harness.

BAD

Repair or replace

OK

Check NO. 1 main relay.

BAD

Replace

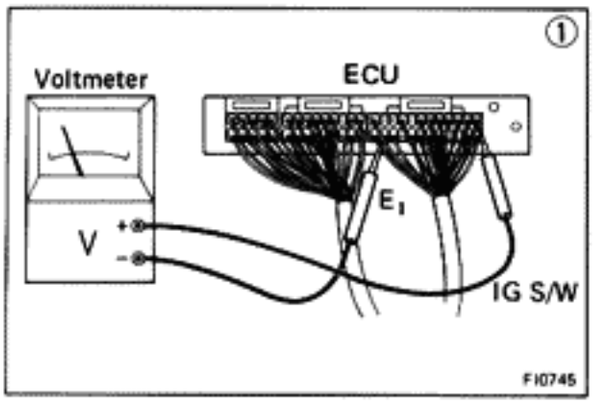

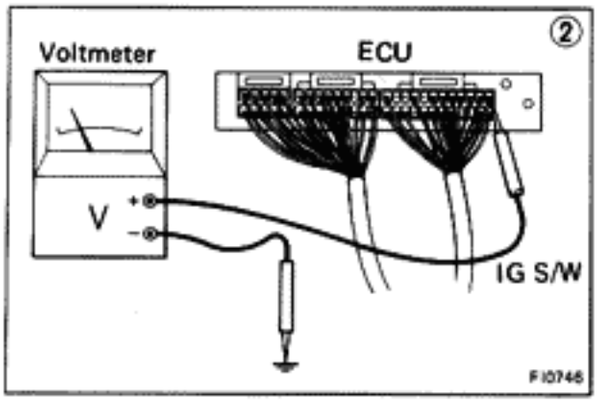

• IG S/W ↔ E1

① There is no voltage between ECU terminals IG S/W and E1. **(IG S/W ON)**

② Check that there is voltage between ECU terminal IG S/W and body ground. **(IG S/W ON)**

NO

OK

Check wiring between ECU terminal E1 and body ground.

BAD

Repair or replace

Check fusible links and ignition switch.

NO

Repair or replace

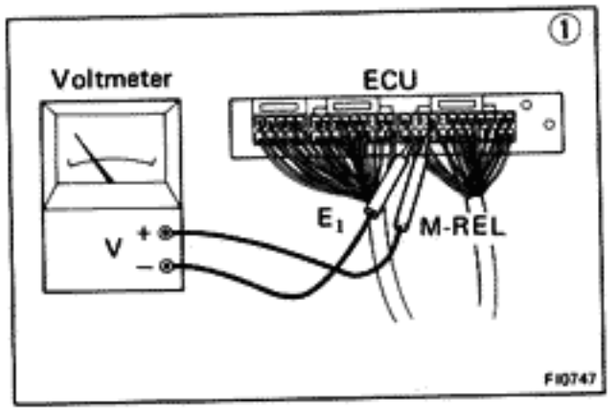

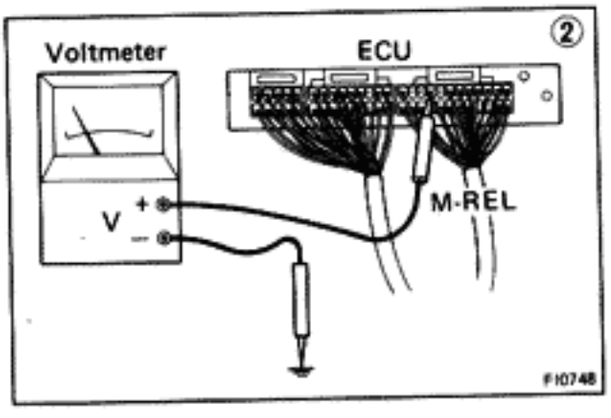

- **M-REL ↔ E_1**

① There is no voltage between ECU terminals M-REL and E_1. **(IG S/W ON)**

② Check that there is voltage between ECU terminal M-REL and body ground. **(IG S/W ON)**

NO

OK

Check wiring between ECU terminal E_1 and body ground.

BAD

Repair or replace

Check NO. 1 main relay and wiring harness.

BAD

Replace

OK

Try another ECU.

No.	Terminals	Trouble	Condition		STD voltage
2	IDL — E_2	No voltage	Ignition switch ON	Throttle valve open	4 — 6
	VTA — E_2			Throttle valve fully closed	0.1 — 1.0
	Vc — E_2			Throttle valve fully open	4 — 5
				—	4 — 6

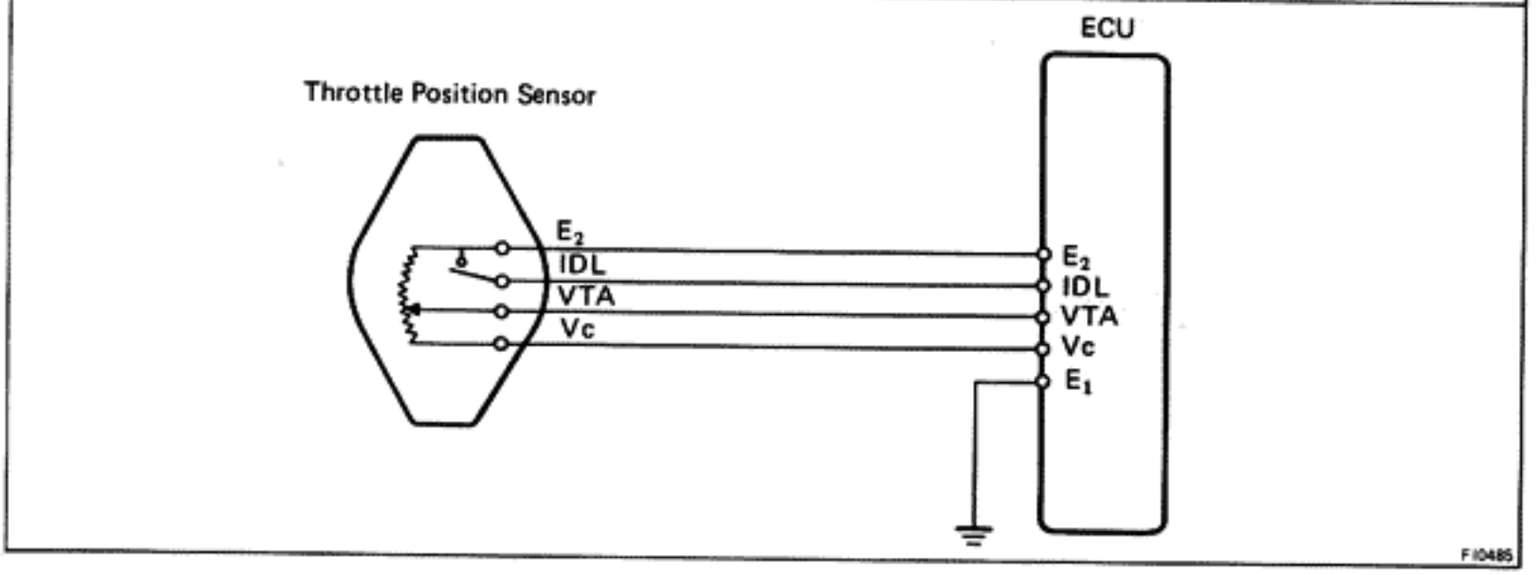

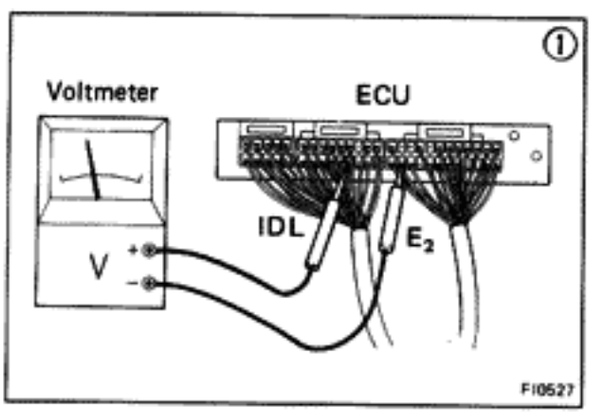

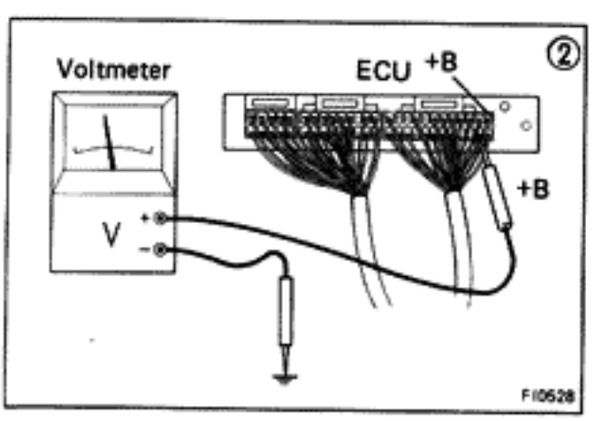

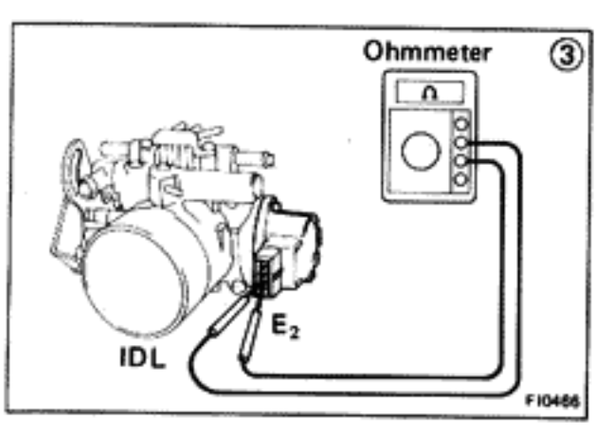

• **IDL ↔ E_2**

① There is no voltage between ECU terminals IDL and E_2. **(IG S/W ON)** (Throttle valve open)

② Check that there is voltage between ECU terminal +B body and body ground. **(IG S/W ON)**

NO

OK

Check wiring between ECU terminal E_1 and body ground.

BAD

Repair or replace

Refer to No. 1.

BAD

Repair or replace

OK

③ Check throttle position sensor.

BAD

Repair or replace throttle position sensor.

OK

Check wiring between ECU and throttle position sensor.

BAD

OK

Try another ECU.

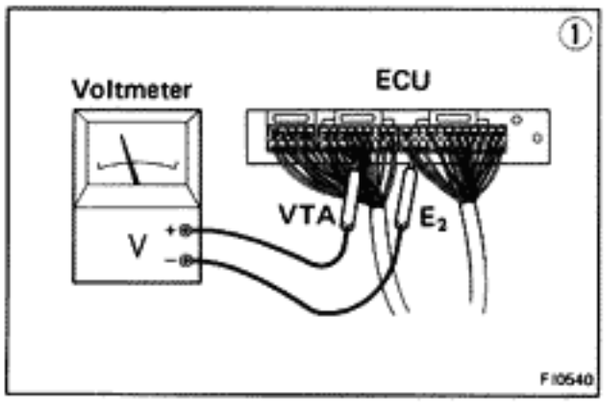

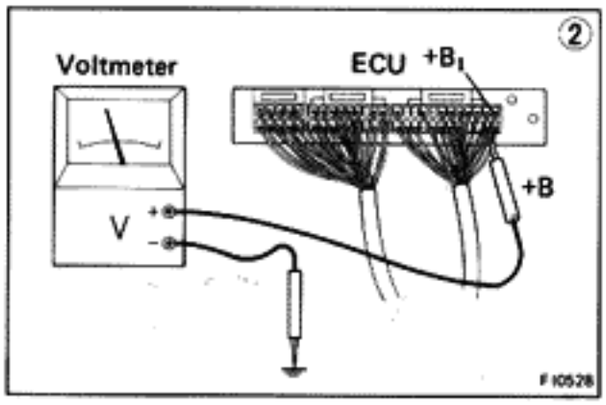

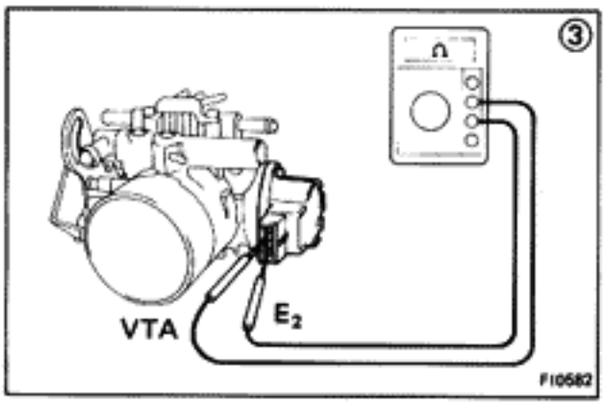

• **VTA ↔ E2**

① There is no specified voltage at ECU terminals VTA and E2. **(IG S/W ON)**

↓

② Check that there is voltage between ECU terminal +B and body ground. **(IG S/W ON)**

NO → Check wiring between ECU terminal E1 and body ground.
- BAD → Repair or replace

OK →

Refer to No. 1.
- BAD → Repair or replace

OK →

③ Check throttle position sensor.
- BAD → Repair or replace

OK →

Check wiring between ECU and throttle position sensor.
- BAD → Repair or replace

OK →

Try another ECU.

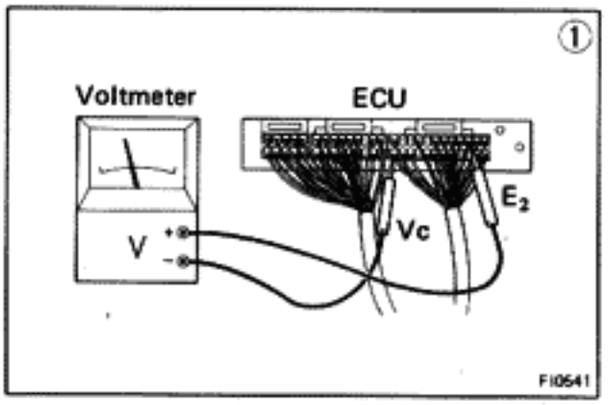

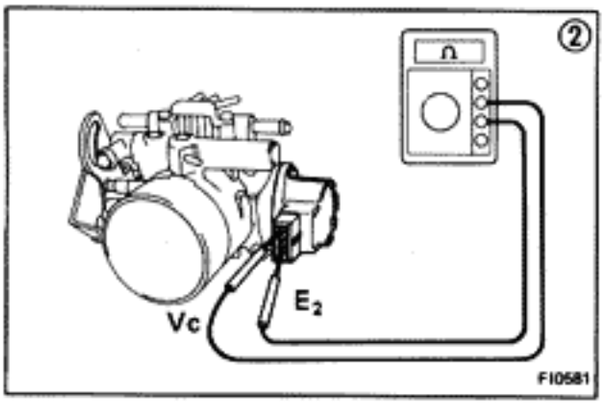

• **Vc ↔ E2**

① There is no voltage between ECU terminals Vc and E2. **(IG S/W ON)**

↓

Check that there is voltage between ECU terminal +B and body ground. **(IG S/W ON)**

OK →

② Check throttle position sensor.
- BAD → Repair or replace
- OK → Check wiring between ECU and throttle position sensor.
  - OK → Try another ECU.
  - BAD → Repair or replace wiring.

NO → Refer to No. 1.

No.	Terminal	Trouble	Condition		STD Voltage
3	Vc – E2	No voltage	Ignition S/W ON	—	4 – 6 V
	Vs – E2			Measuring plate fully closed	4 – 5 V
	Vs – E2			Measuring plate fully open	0.02 – 0.08 V
	Vs – E2		Idling	—	2 – 4 V
	Vs – E2		3,000 rpm	—	0.3 – 1.0 V
	THA – E2		IG S/W ON	Intake air temperature 20°C (68°F)	1 – 2 V

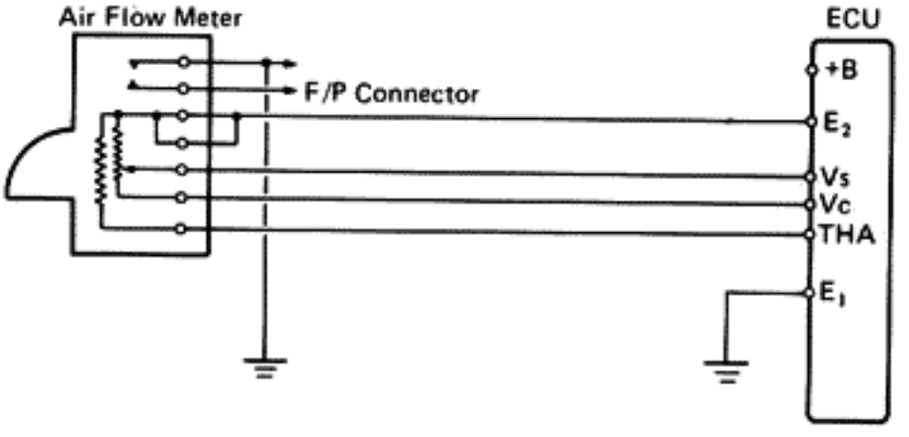

FI0749

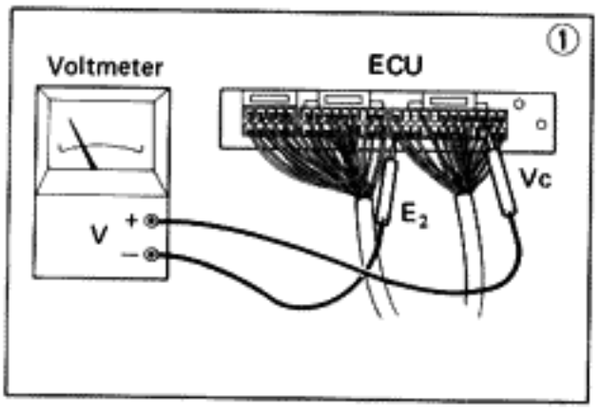

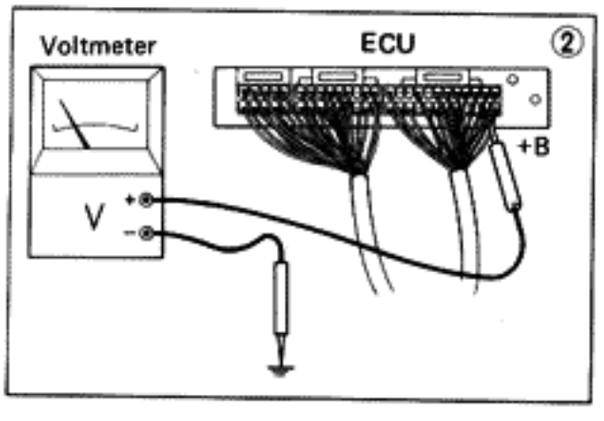

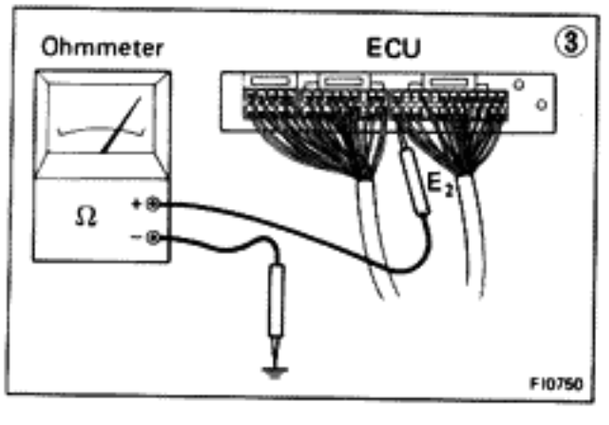

FI0750

• Vc ↔ E2

① There is no voltage between ECU terminals Vc and E2. **(IG S/W ON)**

↓

② Check that there is voltage between ECU terminal +B and body ground. **(IG S/W ON)**

NO → ③ Check wiring between ECU terminal E2 and body ground.

③ BAD → Repair or replace

② OK →

Refer to No. 1. BAD → Repair or replace

OK ↓

Check air flow meter. BAD → Repair or replace

OK ↓

Check wiring between ECU and air flow meter. BAD → Repair or replace

OK ↓

Try another ECU.

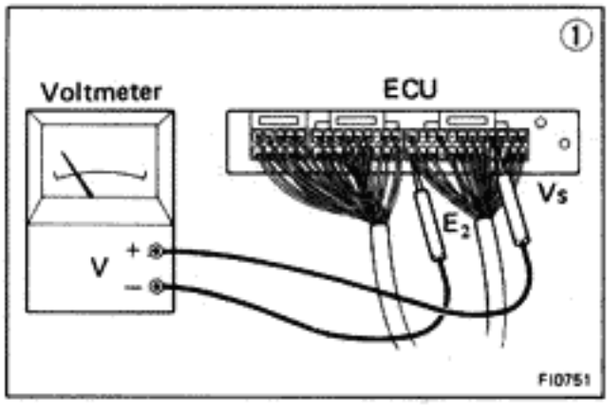

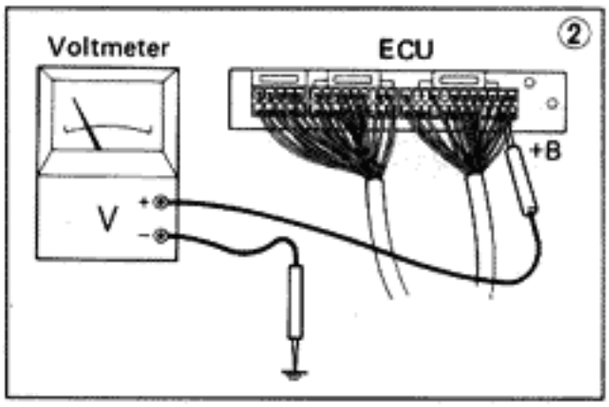

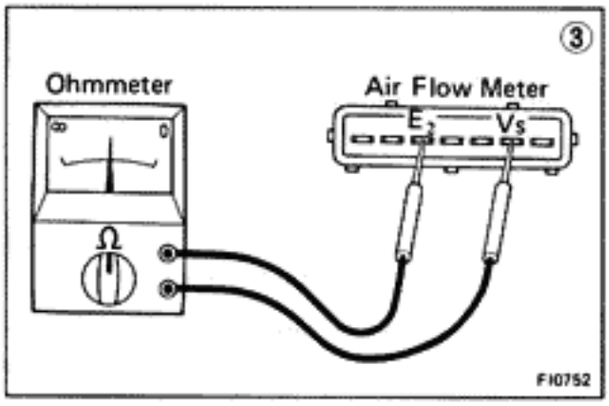

• **Vs ↔ E_2**

① There is no specified voltage at ECU terminals Vs and E_2. **(IG S/W ON)**

↓

② Check that there is voltage between ECU terminal +B and body ground. **(IG S/W ON)**

NO → Check wiring between ECU terminal E_2 and body ground.
- BAD → Repair or replace

OK ↓

Refer to No. 1.
- BAD → Repair or replace

OK ↓

③ Check air flow meter.
- BAD → Repair or replace

OK ↓

Check wiring between ECU and air flow meter.
- BAD → Repair or replace

OK ↓

Try another ECU.

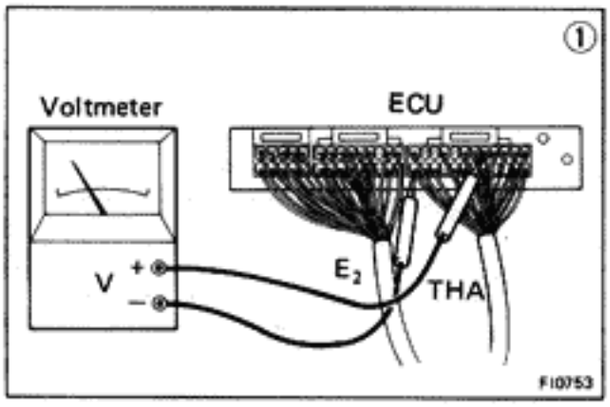

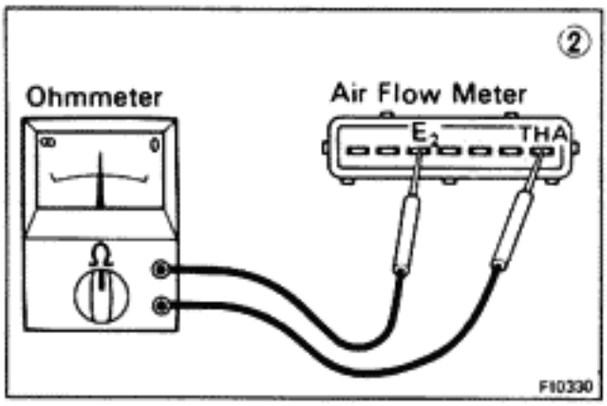

• **THA ↔ E_2**

① There is no voltage between ECU terminals THA and E_2. **(IG S/W ON)**

↓

Check that there is voltage between ECU terminal +B and body ground. **(IG S/W ON)**

OK ↓

② Check air temp. sensor.
- BAD → Replace air temp. sensor.
- OK → Check wiring between ECU and air temp. sensor.
  - OK → Try another ECU.
  - BAD → Repair or replace wiring.

NO → Refer to No. 1.

No.	Terminals	Trouble	Condition		STD Voltage
4	THW — E_2	No voltage	Ignition switch ON	Coolant temperature 80°C (176°F)	0.1 — 0.5 V

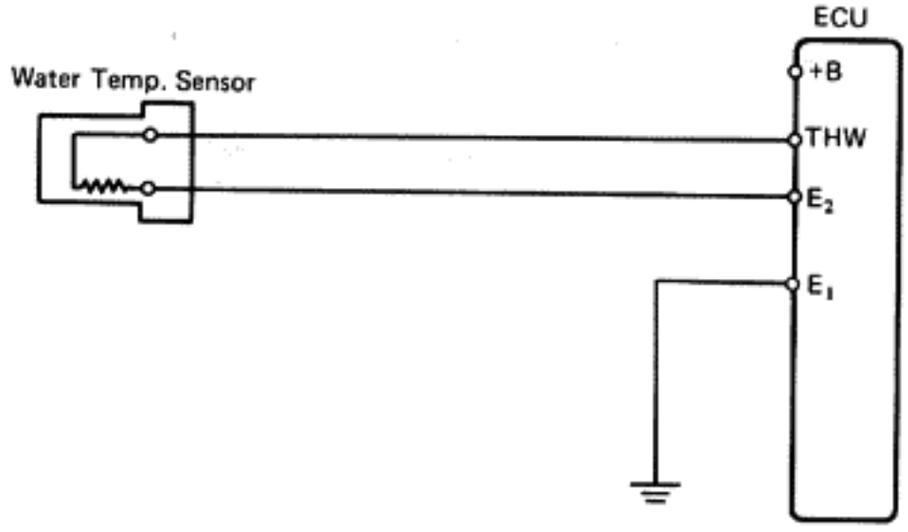

FI0331

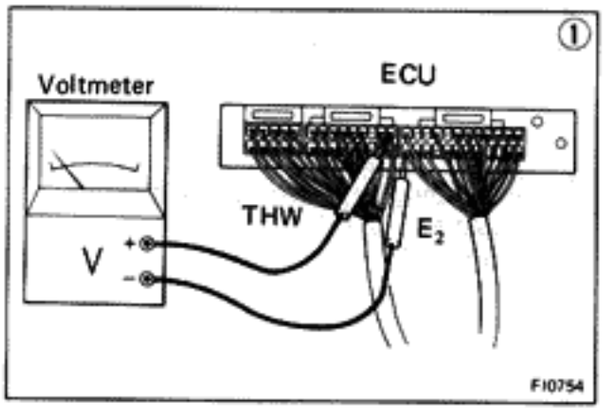

FI0754

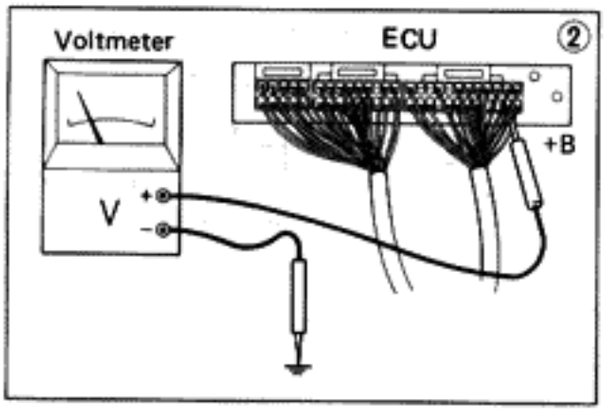

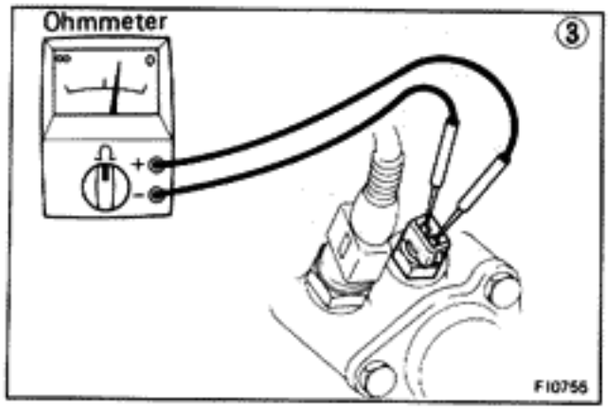

FI0756

① There is no voltage between ECU terminals THW and E_2. **(IG S/W ON)**

↓

② Check that there is voltage between ECU terminal +B and body ground. **(IG S/W ON)**

OK ↓ / NO → Refer to No. 1.

③ Check water temp. sensor.

BAD ↓ / OK →

Replace water temp. sensor.

Check wiring between ECU and water temp. sensor.

OK ↓ / BAD →

Try another ECU.

Repair or replace wiring.

No.	Terminals	Trouble	Condition	STD Voltage
5	STA — E_1	No voltage	Ignition switch ST position	6 — 12 V

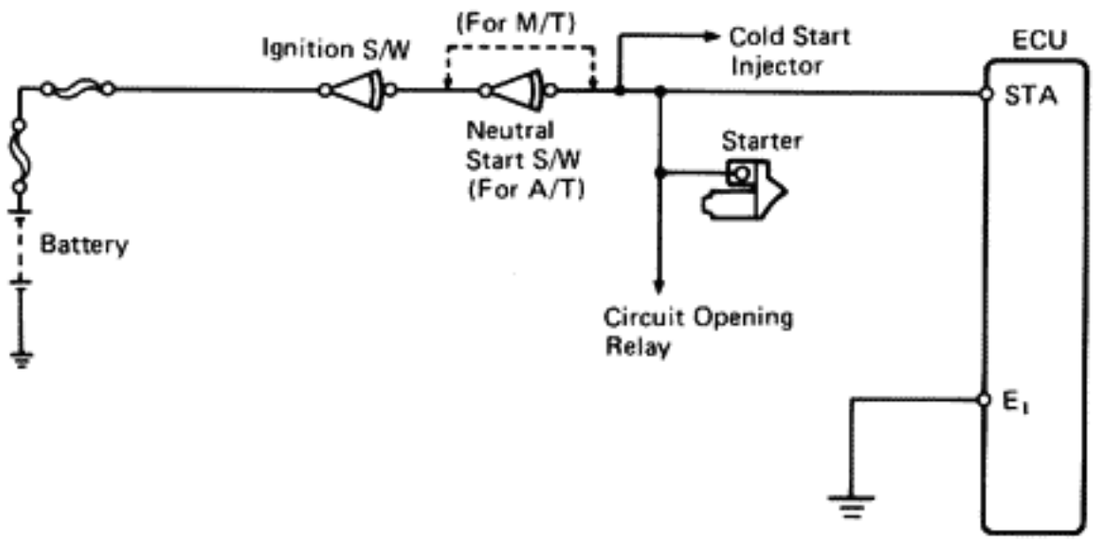

F10756

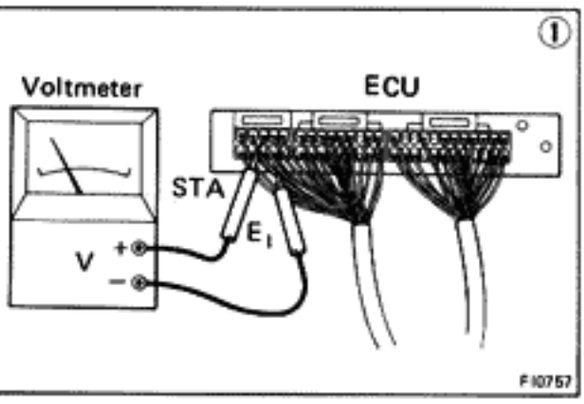

F10757

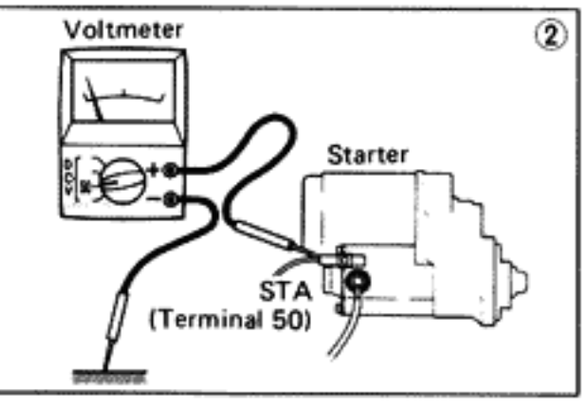

① There is no voltage between ECU terminals STA and E_1. **(IG S/W ST)**

Check starter operation. — OK → Check wiring between ECU and starter terminal 50. — OK → Check wiring between ECU terminal E_1 and body ground. — BAD → Repair or replace

Check starter operation. — BAD → Repair or replace

Check wiring between ECU and starter terminal 50. — BAD → Repair or replace

Check fusible link, battery, wiring and ignition switch. — BAD → Repair or replace

OK

② Check that there is voltage at STA (50) terminal of starter. **(IG S/W ST)** **STD voltage: 9 — 11 V**

OK → Check starter.

NO → Check wiring between ignition switch ST terminal and starter STA (50) terminal.

No.	Terminals	Trouble	Condition	STD Voltage
6	No. 10 — E_1 No. 20 — E_1	No voltage	Ignition switch ON	9 — 14V

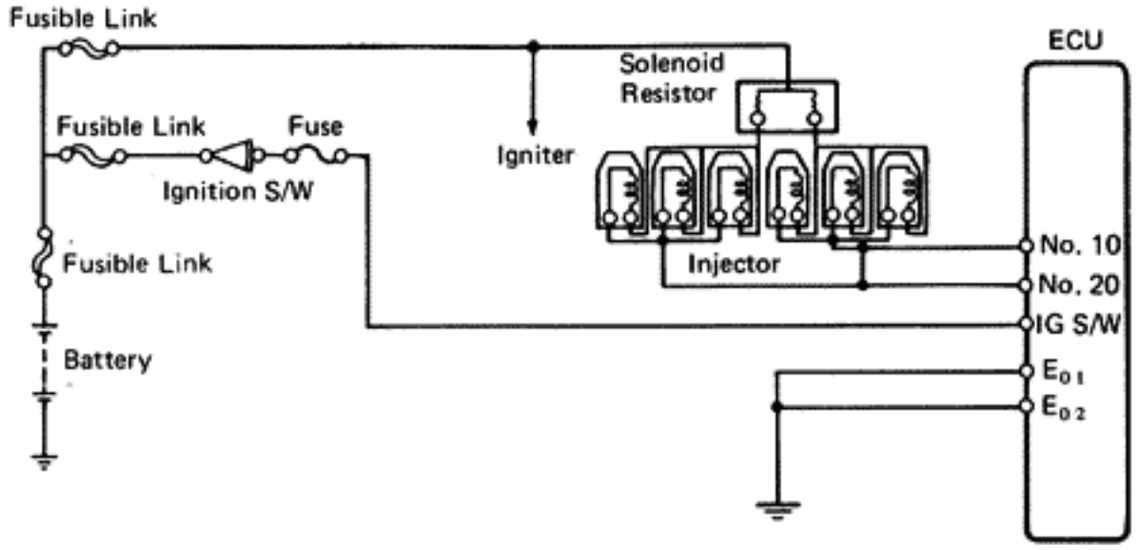

FI0758

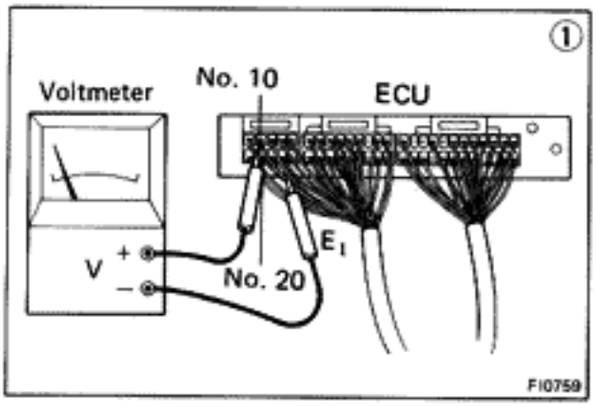

FI0759

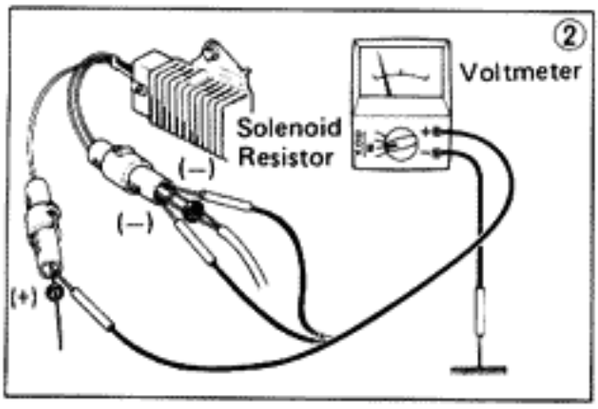

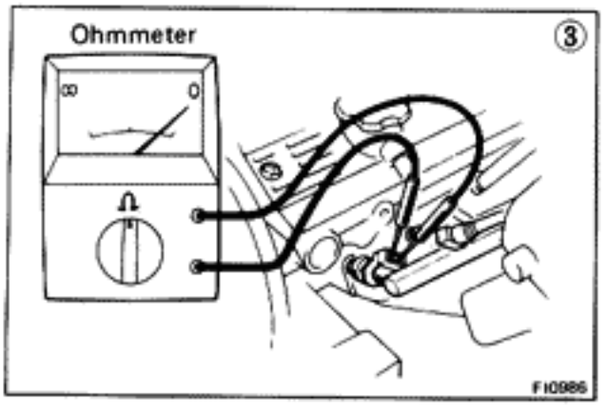

FI0986

① There is no voltage between ECU terminal No. 10 and/or No. 20 and E_{01} or E_{02}. **(IG S/W ON)**

↓

② Check that there is specified voltage between resistor terminal (+) and body ground. **STD voltage: 10 — 13V**

OK ↓ / NO →

Check fuse, fusible link and ignition switch. → BAD → Repair or replace

↓ OK

Check main relay No. 2. → BAD → Replace

↓ OK

Check wiring between resistor and battery. → BAD → Repair or replace

② Check that there is specified voltage between resistor terminal (−) and body ground. **STD voltage: 10 — 13V**

OK ↓ / BAD →

③ Check resistance of magnetic coil in the each injector. **STD resistance: 1.5 — 3.0Ω** → BAD → Replace resistor.

↓ OK

Check wiring between ECU and injector. → BAD → Replace injector.

↓ OK

Try another ECU.

BAD → Repair or replace

No.	Terminals	Trouble	Condition	STD Voltage
7	IGt — E_1	No voltage	Cranking or Idling	0.7 — 1.0V

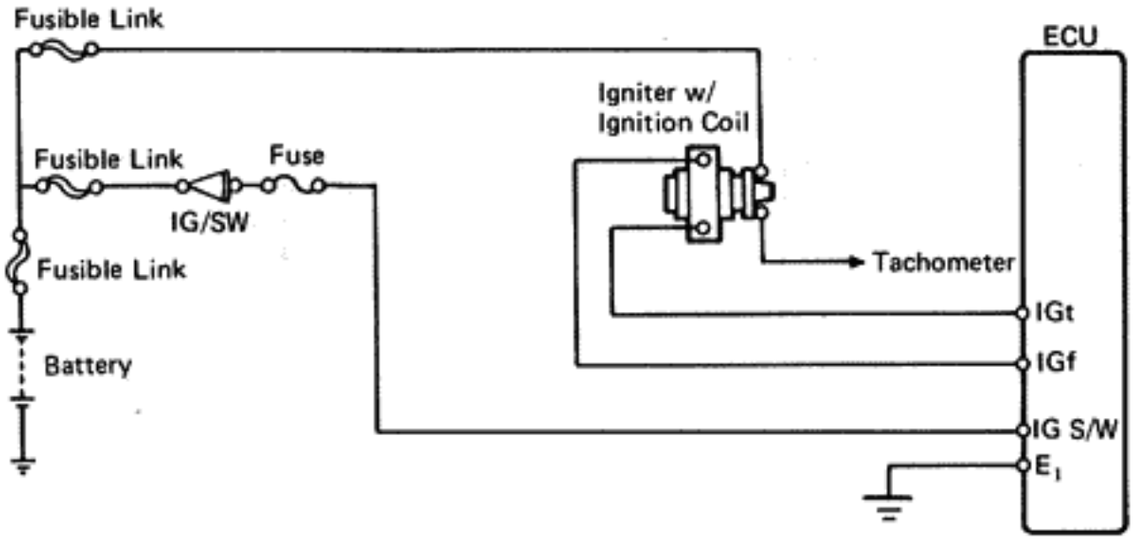

FI0760

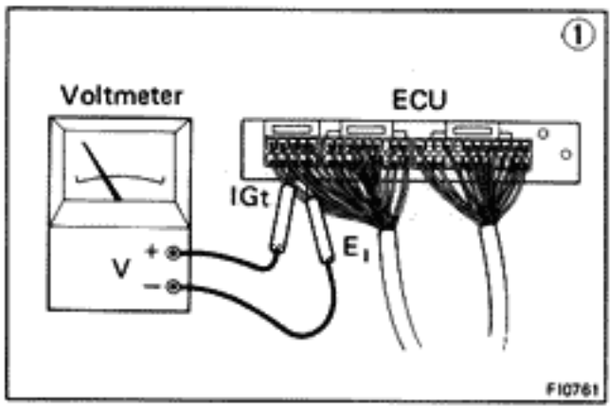

FI0761

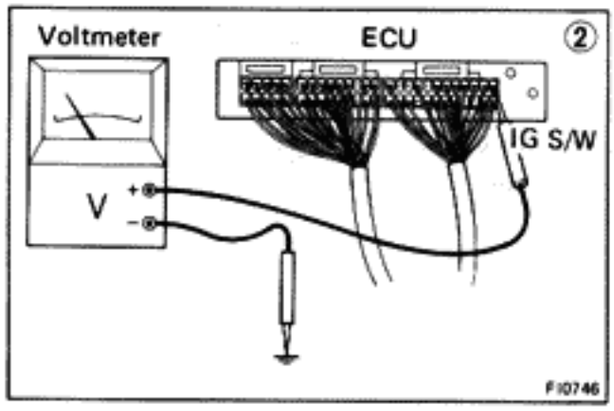

FI0746

① There is no voltage between ECU terminal IGt and E_1. (Idling)

② Check that there is voltage between ECU terminal IG S/W and body ground. (Idling)

OK

Check wiring between ECU terminal E_1 and body ground.

BAD

Refer to No. 1. — BAD → Repair or replace

OK

Check fuse and wiring harness. — BAD → Repair or replace

OK

Check wiring between ECU and distributor. — BAD → Repair or replace

OK

Check distributor. — BAD → Replace

OK

Check wiring between ECU and igniter. — BAD → Repair or replace

OK

Check igniter. — BAD → Repair or replace

OK

Try another ECU.

No.	Terminal	Trouble	Condition	STD Voltage
8	$ISC_1 - ISC_4 - E_1$	No voltage	Ignition switch ON	9 — 14V

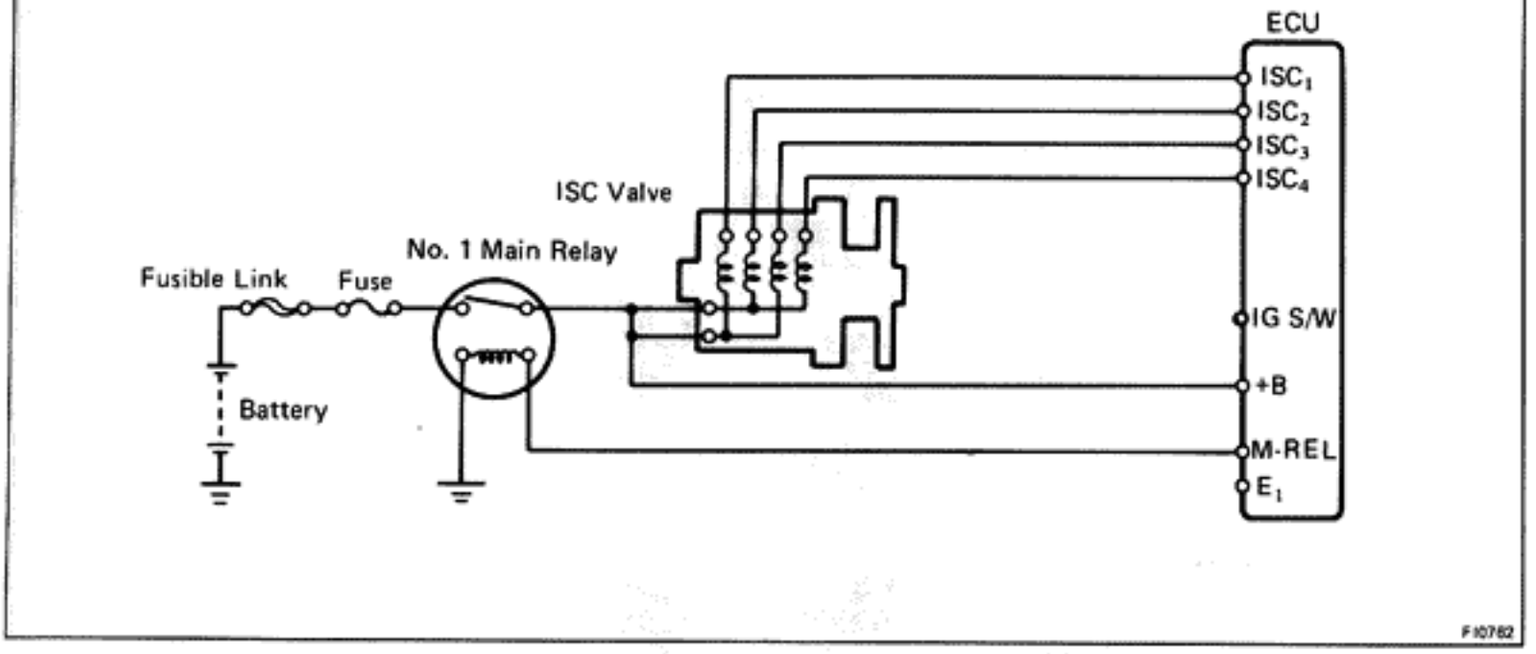

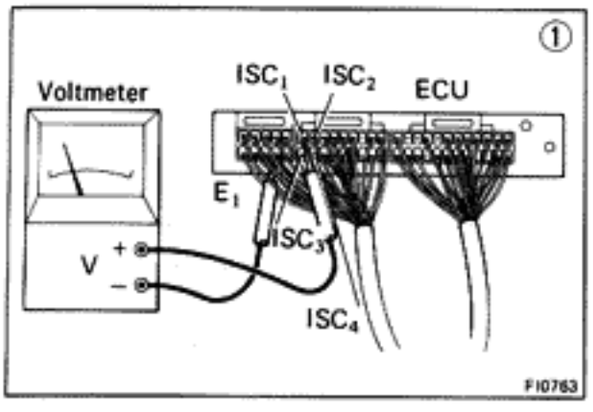

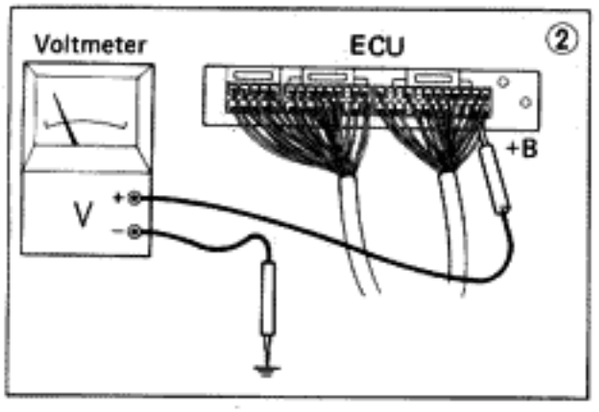

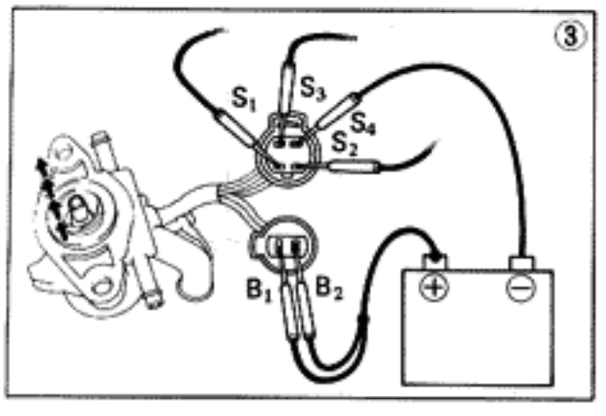

① There is no voltage between ECU terminals ISC_1 — ISC_4 and E_1. **(IG S/W ON)**

② Check that there is voltage between ECU terminal +B and body ground. **(IG S/W ON)**

NO

OK

Check wiring between computer terminal E_1 and body ground.

OK

Try another ECU.

BAD

Repair or replace

Refer to No. 1.

NO

Repair or replace

OK

Check wiring between NO. 1 main relay and battery.

BAD

Repair or replace

OK

③ Check ISC valve.

FUEL SYSTEM
Fuel Pump

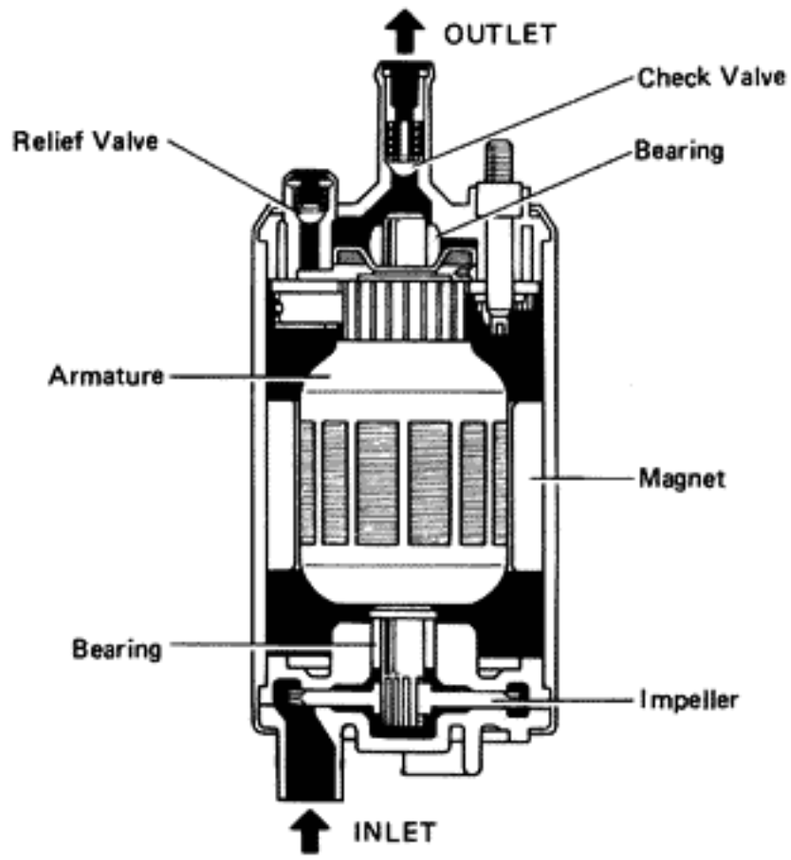

F10530

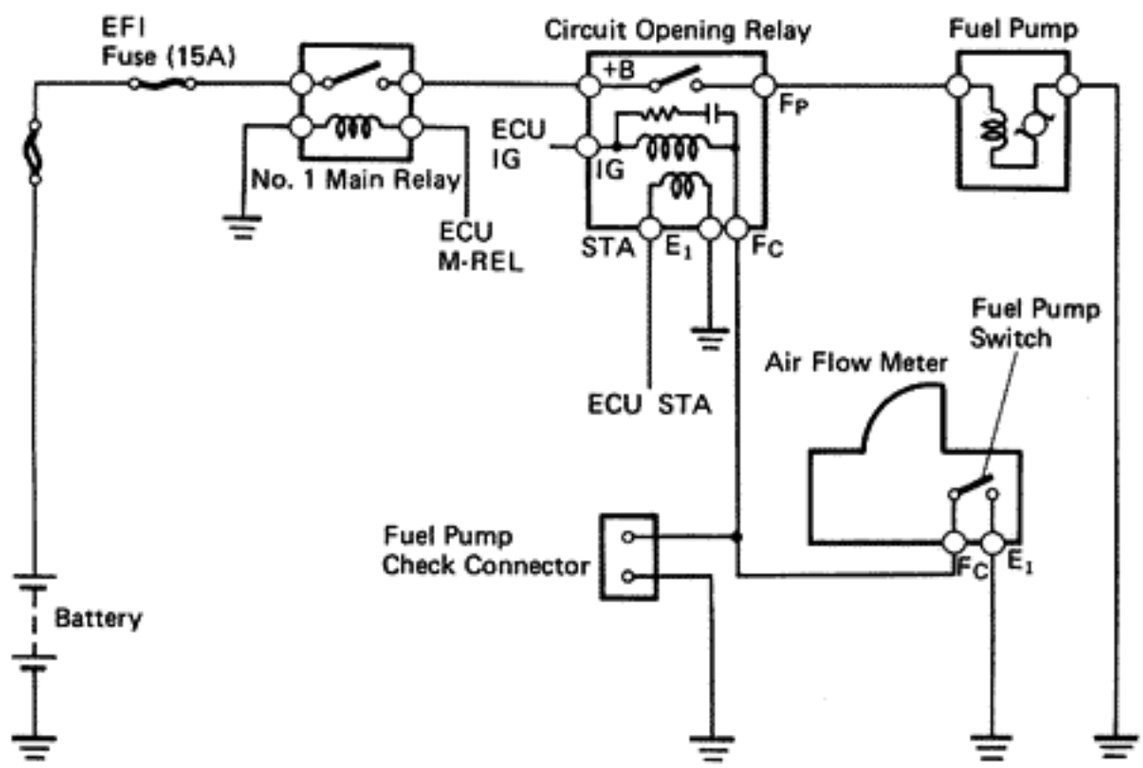

F10633

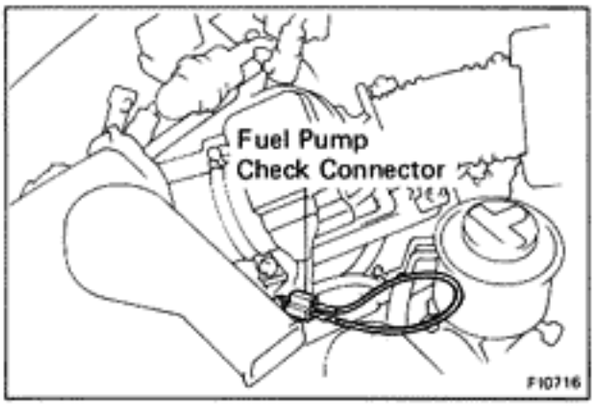

ON-VEHICLE INSPECTION

1. CHECK FUEL PUMP OPERATION

(a) Turn on the ignition switch.

NOTE: Do not start the engine.

(b) Short both terminals of the fuel pump check connector.

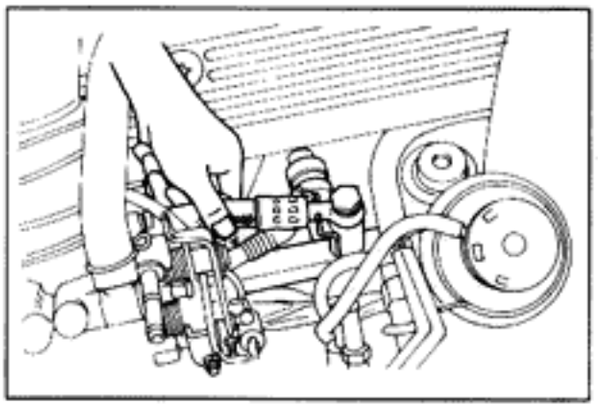

(c) Check that there is a pressure in the hose to the cold start injector.

NOTE: At this time, you will hear fuel return noise from the pressure regulator.

(d) Remove service wire and install the rubber cap to the check terminal.

(e) Turn off the ignition switch.

If there is no pressure, check the following parts.

- Fusible link
- Fuse (EFI. 15A, IGNITION 7.5A)
- Circuit opening relay
- Fuel pump
- Wiring connections

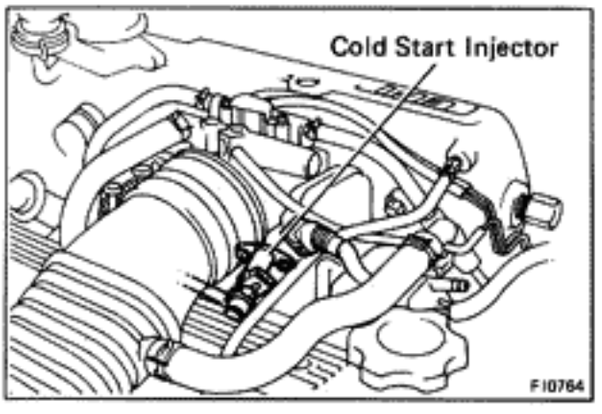

2. CHECK FUEL PRESSURE

(a) Check the battery voltage above 12 volts.

(b) Disconnect the battery ground cable.

(c) Disconnect the wiring connector from the cold start injector.

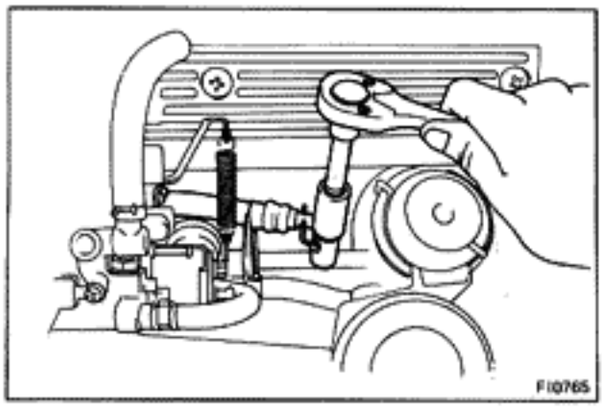

(d) Put a suitable container or shop towel under rear end of the delivery pipe.

(e) Slowly loosen the union bolt of the cold start injector hose and remove the bolt and two gaskets from the delivery pipe.

(f) Drain the fuel in the delivery pipe.

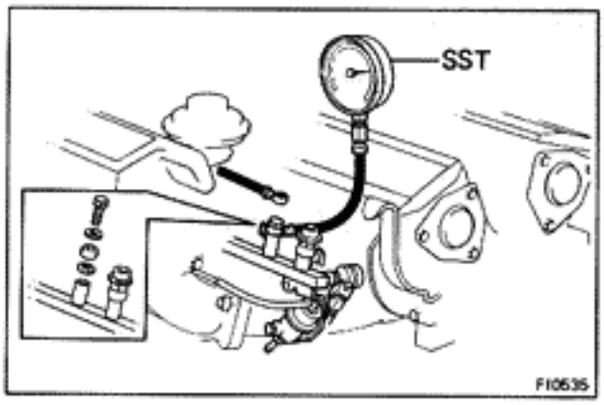

(g) Install a gasket, SST, another gasket and union bolt to the delivery pipe as shown in the figure.

SST 09268-45011

(h) Wipe off any splattered gasoline.

(i) Reconnect the battery cable.

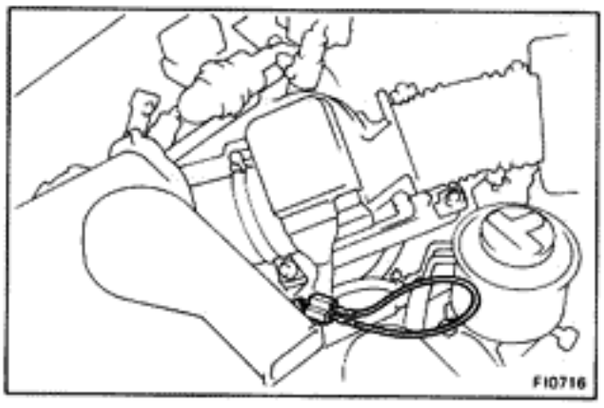

(j) Short both terminals of the fuel pump check connector.

(k) Turn on the ignition switch.

(l) Measure the fuel pressure.

Fuel pressure: 2.3 — 2.7 kg/cm² (33 — 38 psi, 226 — 265 kPa)

If high pressure, replace the pressure regulator.
If low pressure, check the following parts.

- Fuel hoses and connection
- Fuel pump
- Fuel filter
- Pressure regulator

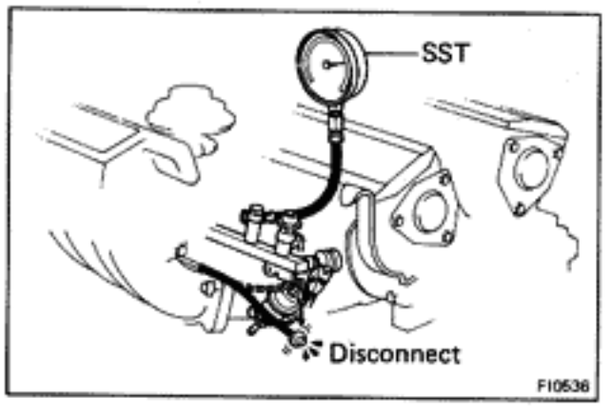

(m) Remove the service wire from the service connector.

(n) Start the engine.

(o) Disconnect the vacuum sensing hose from the pressure regulator and pinch it off.

(p) Measure the fuel pressure at idling.

Fuel pressure: 2.3 — 2.7 kg/cm² (33 — 38 psi, 226 — 265 kPa)

(q) Reconnect the vacuum sensing hose to the pressure regulator.

(r) Measure the fuel pressure at idling.

Fuel pressure: 1.9 — 2.2 kg/cm² (27 — 31 psi, 186 — 216 kPa)

If not pressure, check the vacuum sensing hose and pressure regulator.

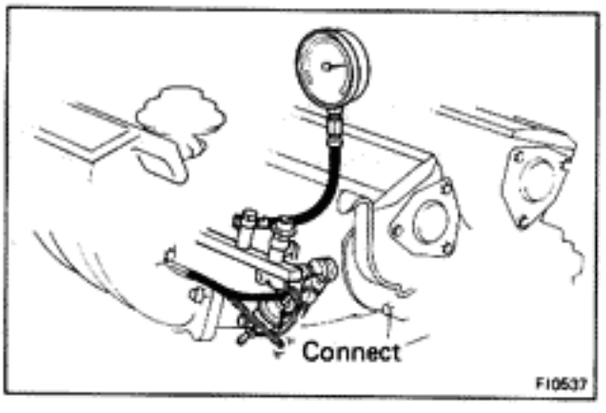

(s) Stop the engine. Check that the fuel pressure remains above 1.5 kg/cm² (21 psi, 147 kPa) for 5 minutes after the engine is turned off.
If not within specification, check the fuel pump, pressure regulator and/or injectors.

(t) After checking fuel pressure, disconnect the battery ground cable and carefully remove the SST to prevent gasoline from splashing.

(u) Using new gaskets, reconnect the cold start injector hose to the delivery pipe.

(v) Connect the wiring connector to the cold start injector.

(w) Check for fuel leakage.

REMOVAL OF FUEL PUMP

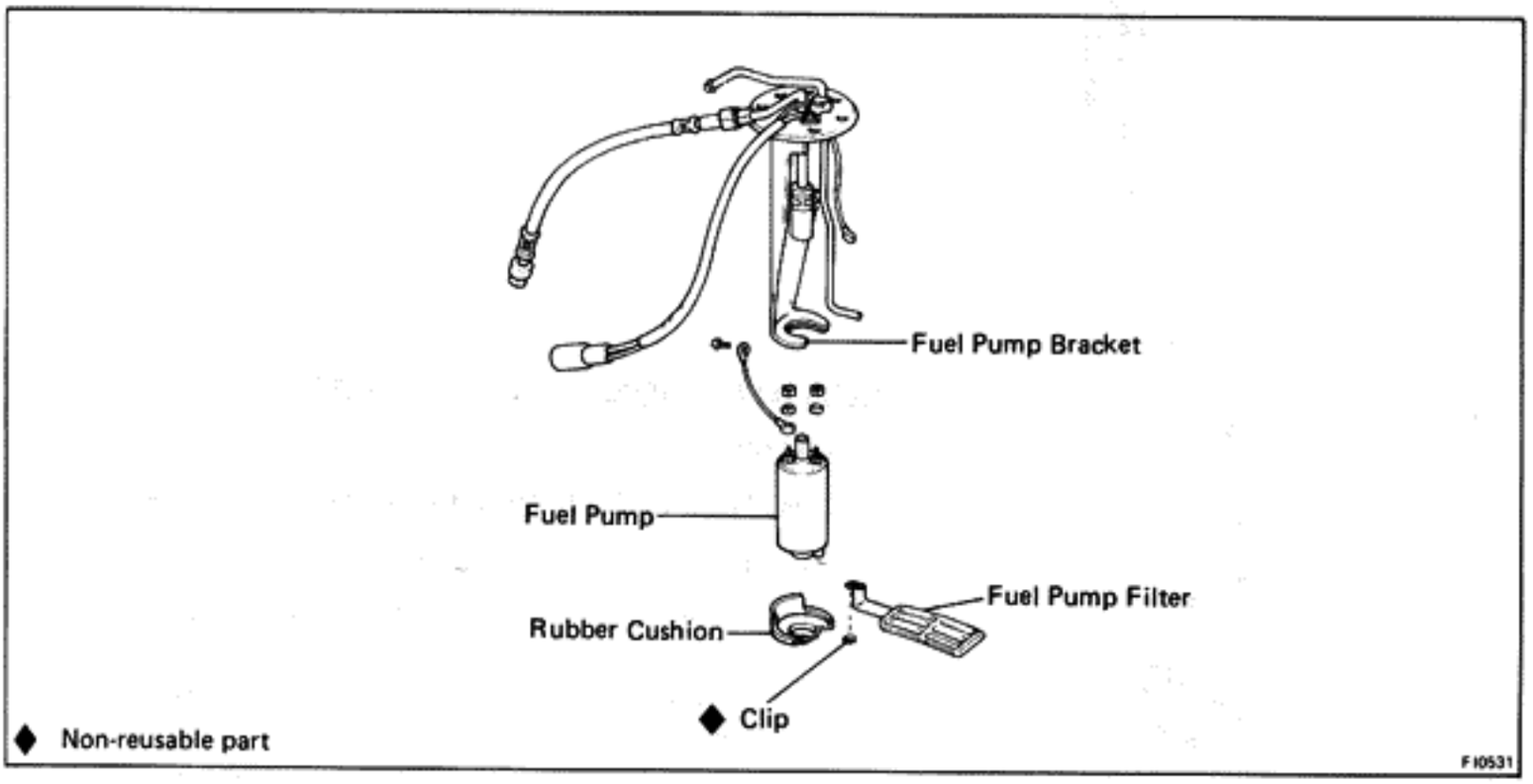

1. **DRAIN FUEL FROM FUEL TANK**

   WARNING: Avoid smoking and open flame when working on the fuel pump.

2. **REMOVE FUEL TANK**

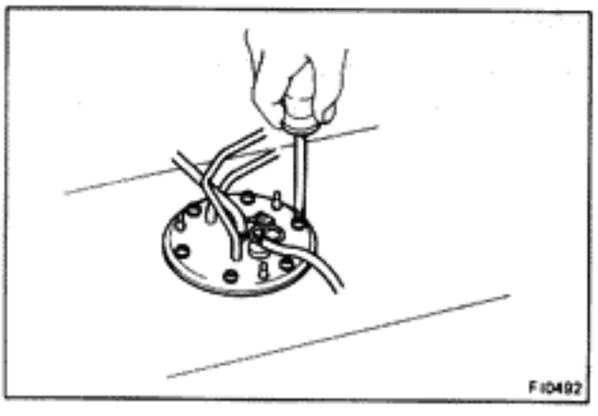

3. **REMOVE FUEL PUMP BRACKET FROM FUEL TANK**
   (a) Remove the bolts.
   (b) Pull out the fuel pump bracket.

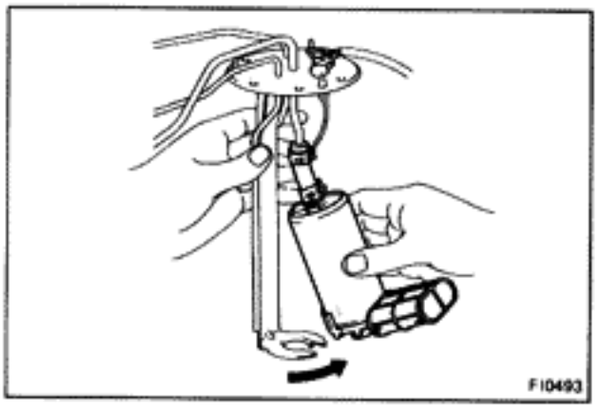

4. **REMOVE FUEL PUMP FROM FUEL PUMP BRACKET**
   (a) Remove the two nuts and disconnect the wires from the fuel pump.
   (b) Pull off the bracket from the lower side of the fuel pump.
   (c) Remove the fuel pump from the fuel hose.

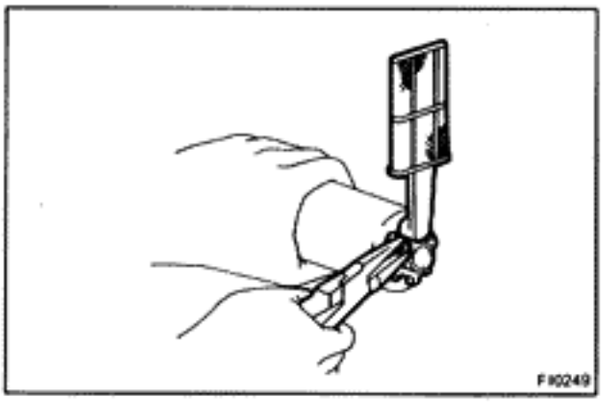

5. **REMOVE FUEL PUMP FILTER FROM FUEL PUMP**
   (a) Remove the rubber cushion.
   (b) Remove the clip and pull out the filter.

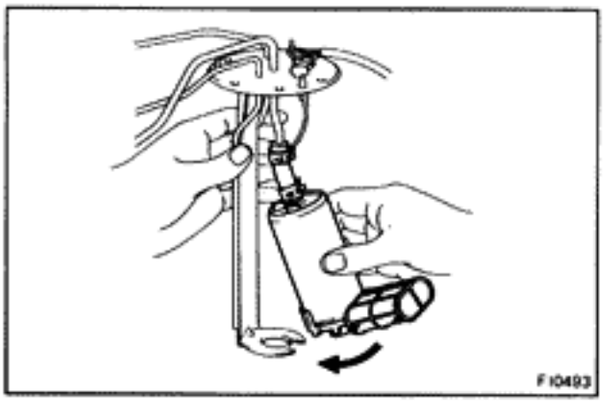

INSTALLATION OF FUEL PUMP

(See page FI-47)

1. **INSTALL FUEL PUMP FILTER TO FUEL PUMP**

2. **INSTALL FUEL PUMP TO FUEL PUMP BRACKET**
   (a) Insert the outlet port of the fuel pump into the fuel hose.
   (b) Install the rubber cushion to the lower side of the fuel pump.
   (c) Push the lower side of the fuel pump, together with the rubber cushion, into the fuel pump bracket.

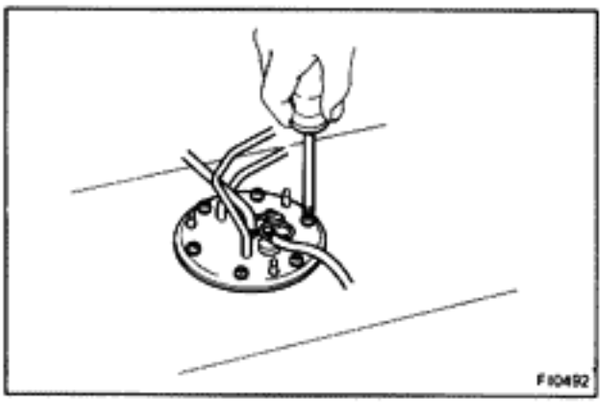

3. **INSTALL FUEL PUMP BRACKET**
   (a) Place the bracket with a new gasket on the fuel tank.
   (b) Install and tighten the screws.

4. **INSTALL FUEL TANK**

   When installing the fuel tank, refer to FI-58 for the installation position of the protector and hose and the tightening torque.

   After installation, check for leaks.

Cold Start Injector

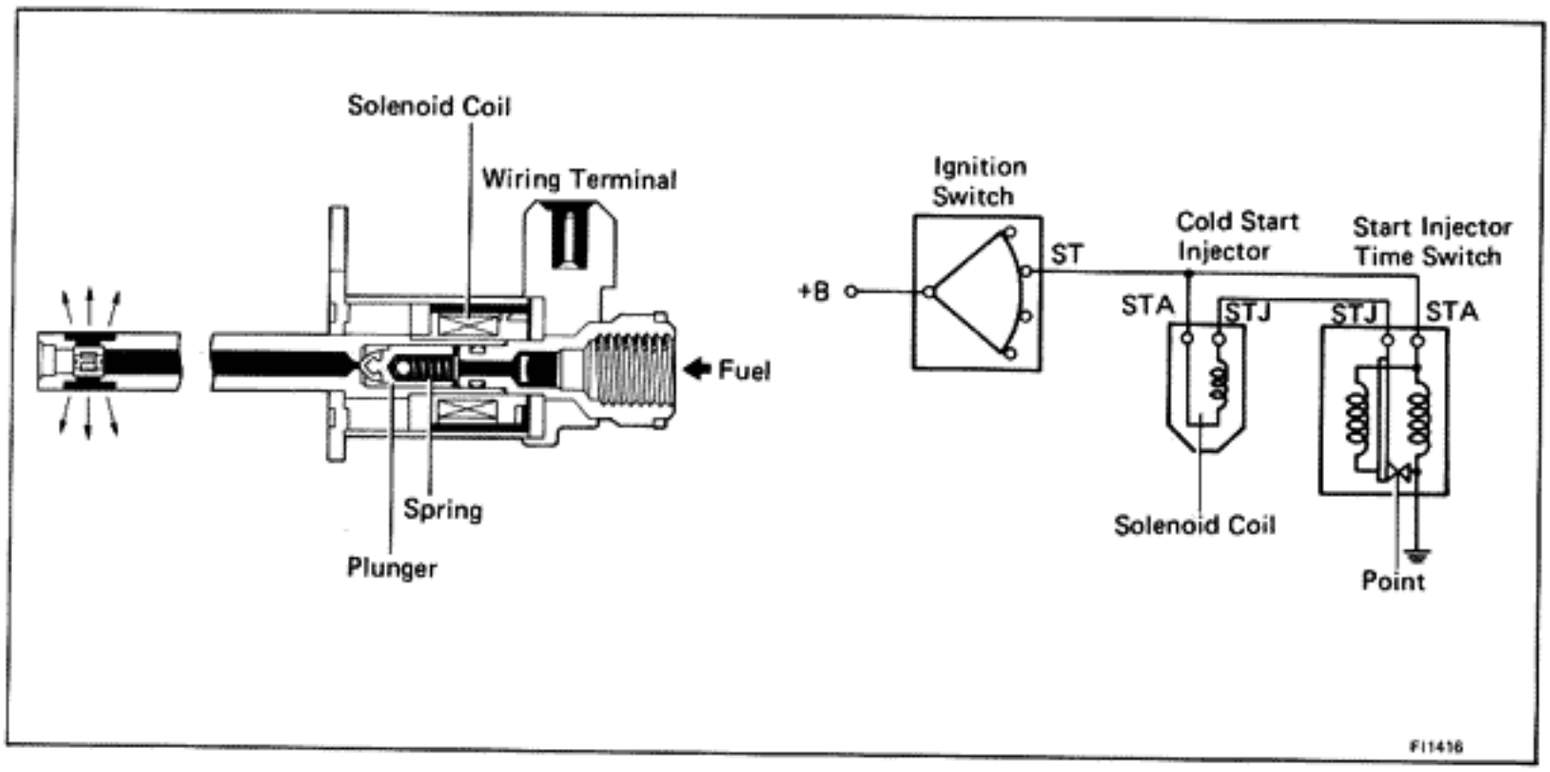

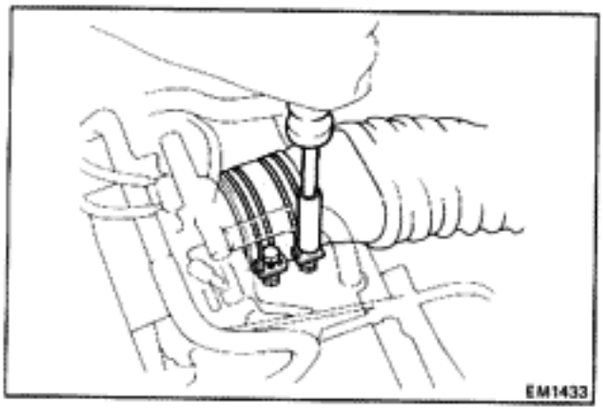

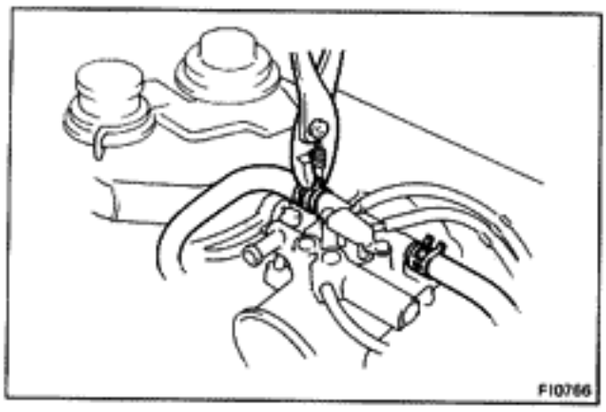

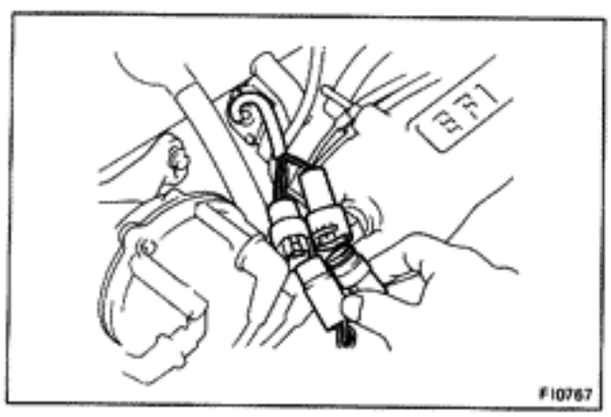

REMOVAL OF COLD START INJECTOR

1. **DRAIN COOLANT**
2. **REMOVE AIR INTAKE CONNECTOR**
3. **DISCONNECT FOLLOWING HOSES:**
   (a) No. 1 water by-pass hose from the ISC valve body.
   (b) No. 2 water by-pass hose from the throttle body.
   (c) Air valve hose from ISC valve body.
   (d) PCV hose from the throttle body.
   (e) Brake booster vacuum hose from the air intake chamber.
   (f) Actuator vacuum hose from the air intake chamber.
   (g) Label and disconnect emission control hoses from the throttle body and air intake chamber that allow removal of vacuum pipe subassembly.
4. **DISCONNECT ACCELERATOR LINKAGE AND CABLE FROM THROTTLE BODY**
5. **DISCONNECT FOLLOWING WIRES:**
   (a) Cold start injector wire
   (b) Throttle position sensor wire
   (c) Two ISC valve connectors
   (d) VSV wire connector
6. **REMOVE AIR INTAKE CHAMBER STAY**
7. **REMOVE VACUUM PIPE SUBASSEMBLY**

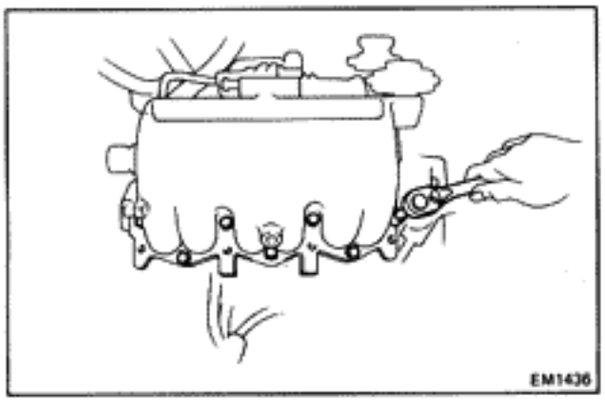

8. **LOOSEN EGR PIPE CONNECTING NUT**
9. **DISCONNECT COLD START FUEL HOSE FROM DELIVERY PIPE**
10. **REMOVE AIR INTAKE CHAMBER**
11. **REMOVE COLD START INJECTOR FROM AIR INTAKE CHAMBER**

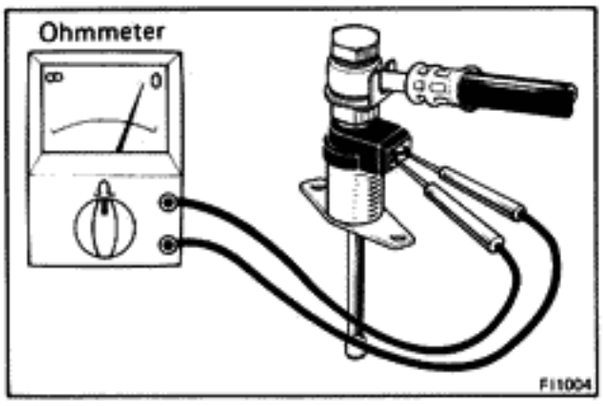

INSPECTION OF COLD START INJECTOR

1. **MEASURE RESISTANCE OF COLD START INJECTOR**

Using an ohmmeter, check the resistance of the injector.

Resistance: 3 — 5 Ω

2. **CHECK INJECTION OF COLD START INJECTOR**

(a) Install the gasket, SST (two unions), another gaskets and two union bolts to the delivery pipe and injector.

(b) Connect the SST (hose) from the unions.

SST 09268-41045

(c) Connect the SST (wire) to the injector.

SST 09842-30050

NOTE: Position the injector as far away from the battery as possible.

(d) Put a container under the injector.

(e) Turn on the ignition switch.

NOTE: Do not start the engine.

(f) Short both terminals of the fuel pump check connector with a service wire.

(g) Connect the test probes of the SST to the battery and check that the fuel spray is as shown.

SST 09842-30050

NOTE: Perform this check within the shortest possible time.

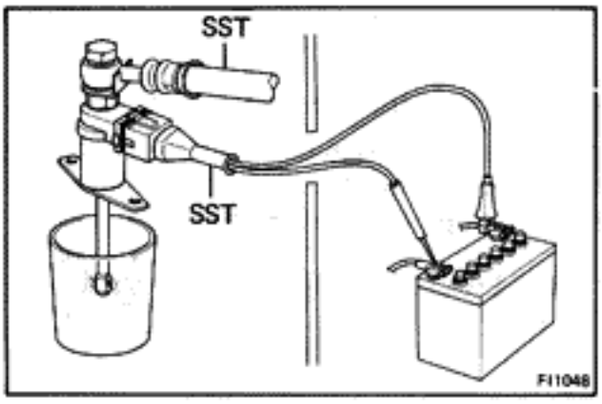

(h) Disconnect the test probes from the battery and check that fuel does not leak from the injector.

Fuel drop: Less than one drop of fuel per minute

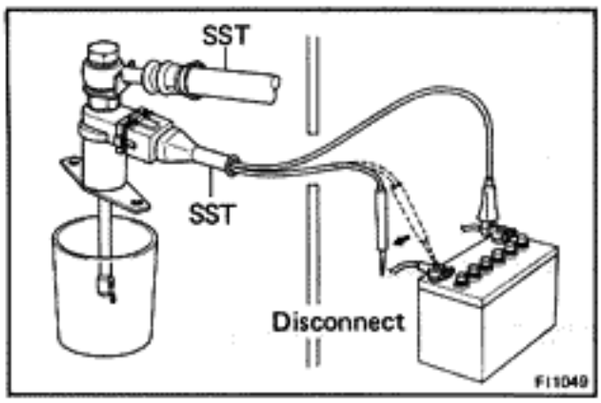

(i) After checking, restore the following to the previous state.

- Fuel pump check connector
- Ignition switch
- SST
- Cold start injector
- Injector wiring

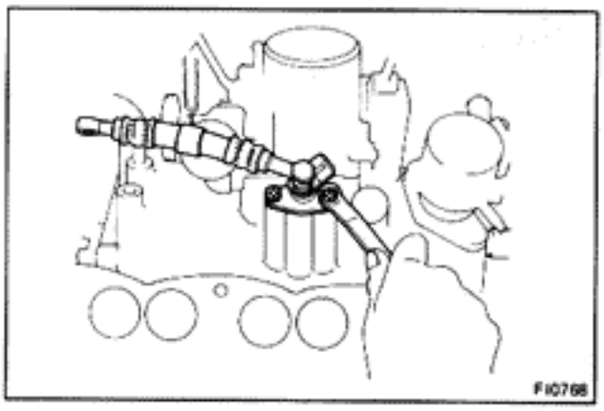

INSTALLATION OF COLD START INJECTOR

1. **INSTALL COLD START INJECTOR**

   Place the new gasket and install the cold start injector and two bolts.

2. **INSTALL AIR INTAKE CHAMBER**

3. **CONNECT COLD START FUEL HOSE TO DELIVERY PIPE**

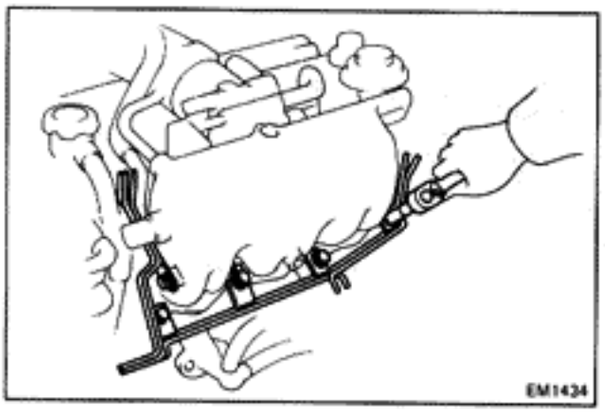

4. **TIGHTEN EGR PIPE CONNECTING NUT**

5. **INSTALL VACUUM PIPE SUBASSEMBLY**

6. **INSTALL AIR INTAKE CHAMBER STAY**

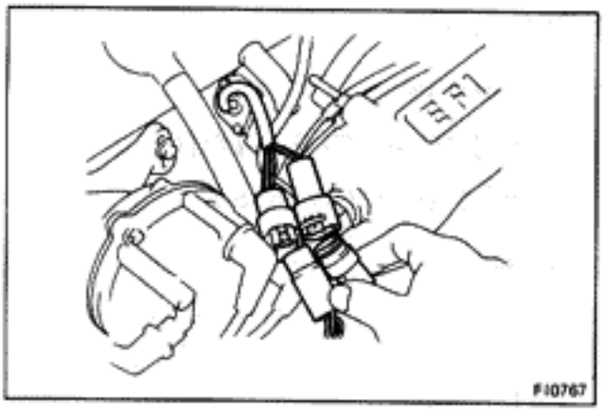

7. **CONNECT FOLLOWING WIRES:**
   (a) VSV wire connector
   (b) Two ISV valve connectors
   (c) Throttle position sensor wire
   (d) Cold start injector wire

8. **CONNECT ACCELERATOR LINKAGE AND CABLE FROM THROTTLE BODY**

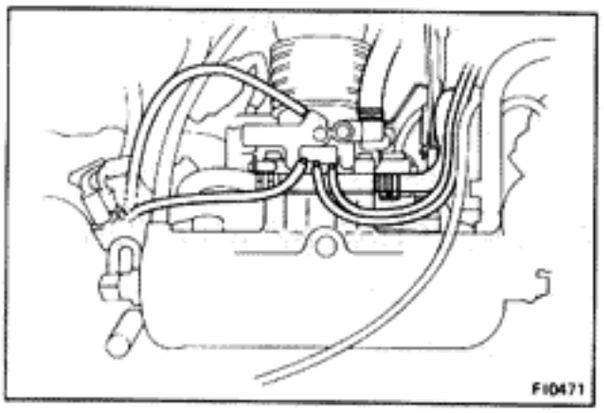

9. **CONNECT FOLLOWING HOSES:**
   (a) Connect the emission control hoses to the throttle body and air intake chamber etc.
   (b) Actuator vacuum hose to the air intake chamber
   (c) Brake booster vacuum hose to the air intake chamber
   (d) PCV hose to the throttle body
   (e) Air valve hose to the ISC valve body
   (f) No. 1 water by-pass hose to the ISC valve body
   (g) No. 2 water by-pass hose to the throttle body

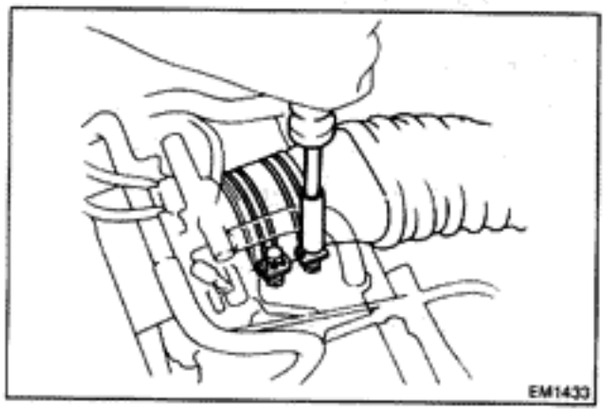

10. **INSTALL AIR INTAKE CONNECTOR**

11. **FILL WITH COOLANT**

Pressure Regulator

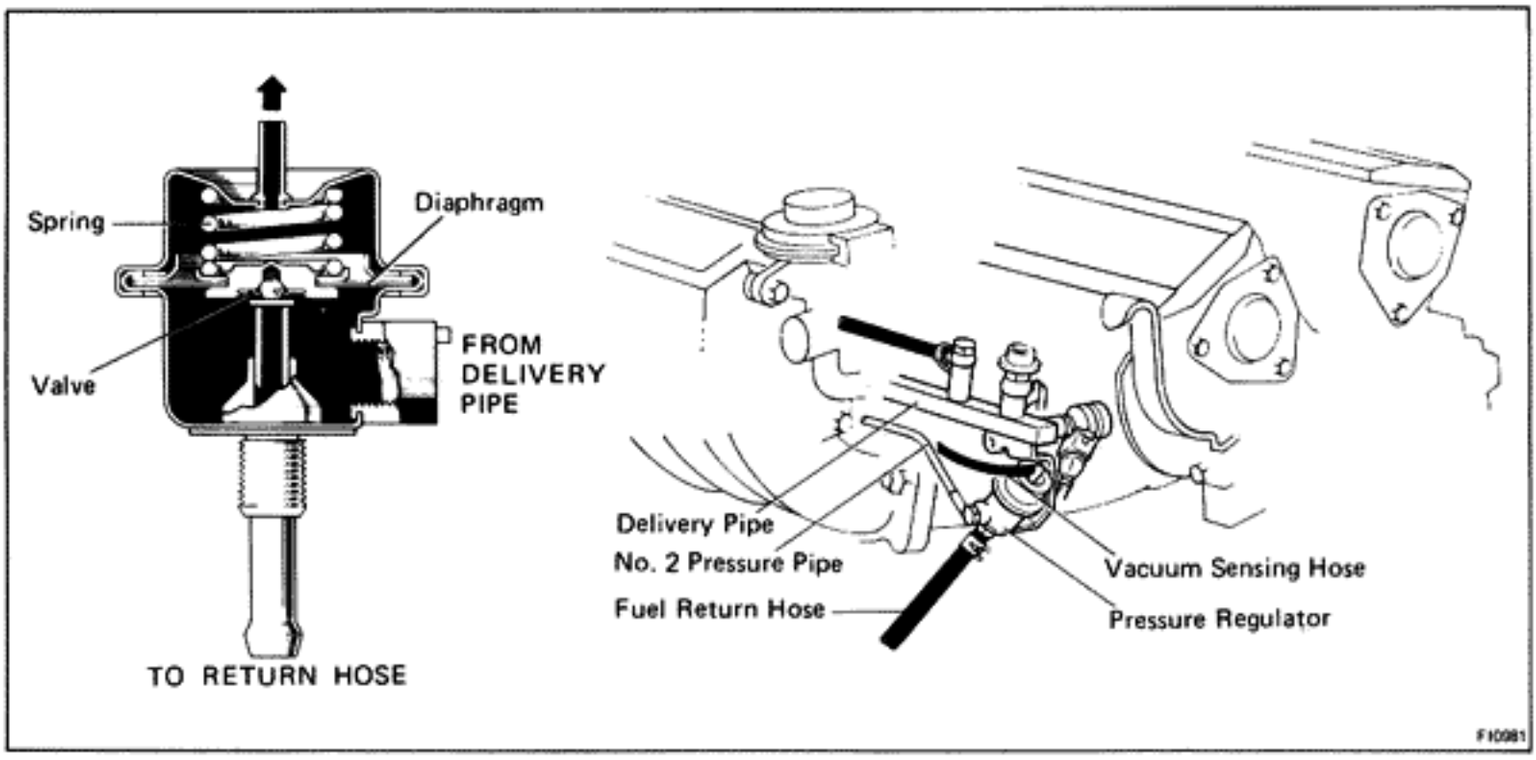

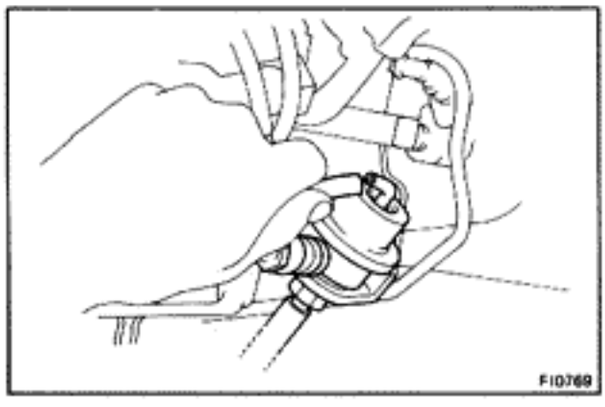

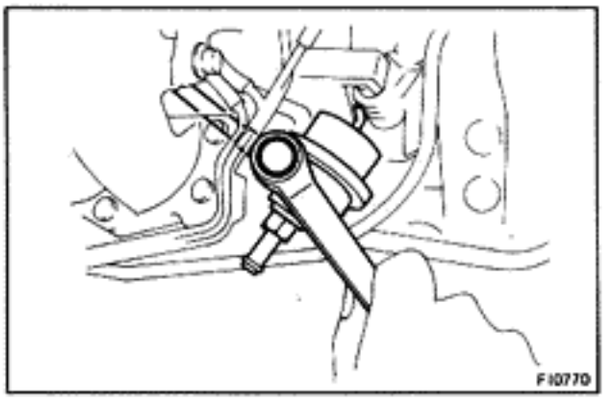

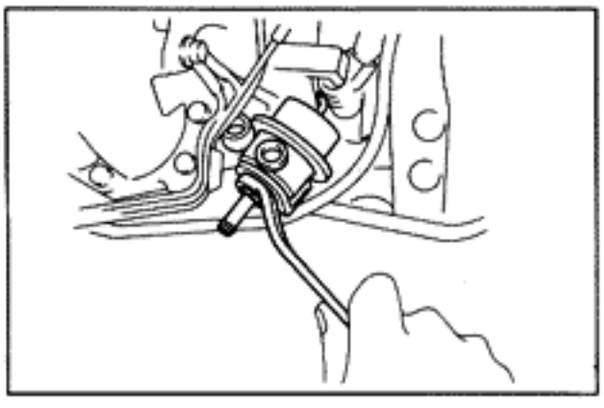

ON-VEHICLE INSPECTION

CHECK FUEL PRESSURE (See page FI-45)

REMOVAL OF PRESSURE REGULATOR

1. **DISCONNECT VACUUM SENSING HOSE**
2. **DISCONNECT FUEL HOSE**
   (a) Put a suitable container or shop towel under the pressure regulator.
   (b) Disconnect the fuel hose from the pressure regulator.
3. **DISCONNECT NO. 2 FUEL PIPE FROM PRESSURE REGULATOR**
4. **REMOVE PRESSURE REGULATOR**
   Remove the lock nut, and remove the pressure regulator.

INSTALLATION OF PRESSURE REGULATOR

1. **INSTALL PRESSURE REGULATOR**
   Install the pressure regulator and lock nut.
   Torque the lock nut.
   Torque: 400 kg-cm (29 ft-lb, 39 N·m)
2. **CONNECT NO. 2 FUEL PIPE**
   Install a new gasket, pipe, another gasket and union bolt to the pressure regulator. Torque the union bolt.
   Torque: 300 kg-cm (22 ft-lb, 30 N·m)
3. **CONNECT FUEL HOSE**
4. **CONNECT VACUUM SENSING HOSE**

Injector

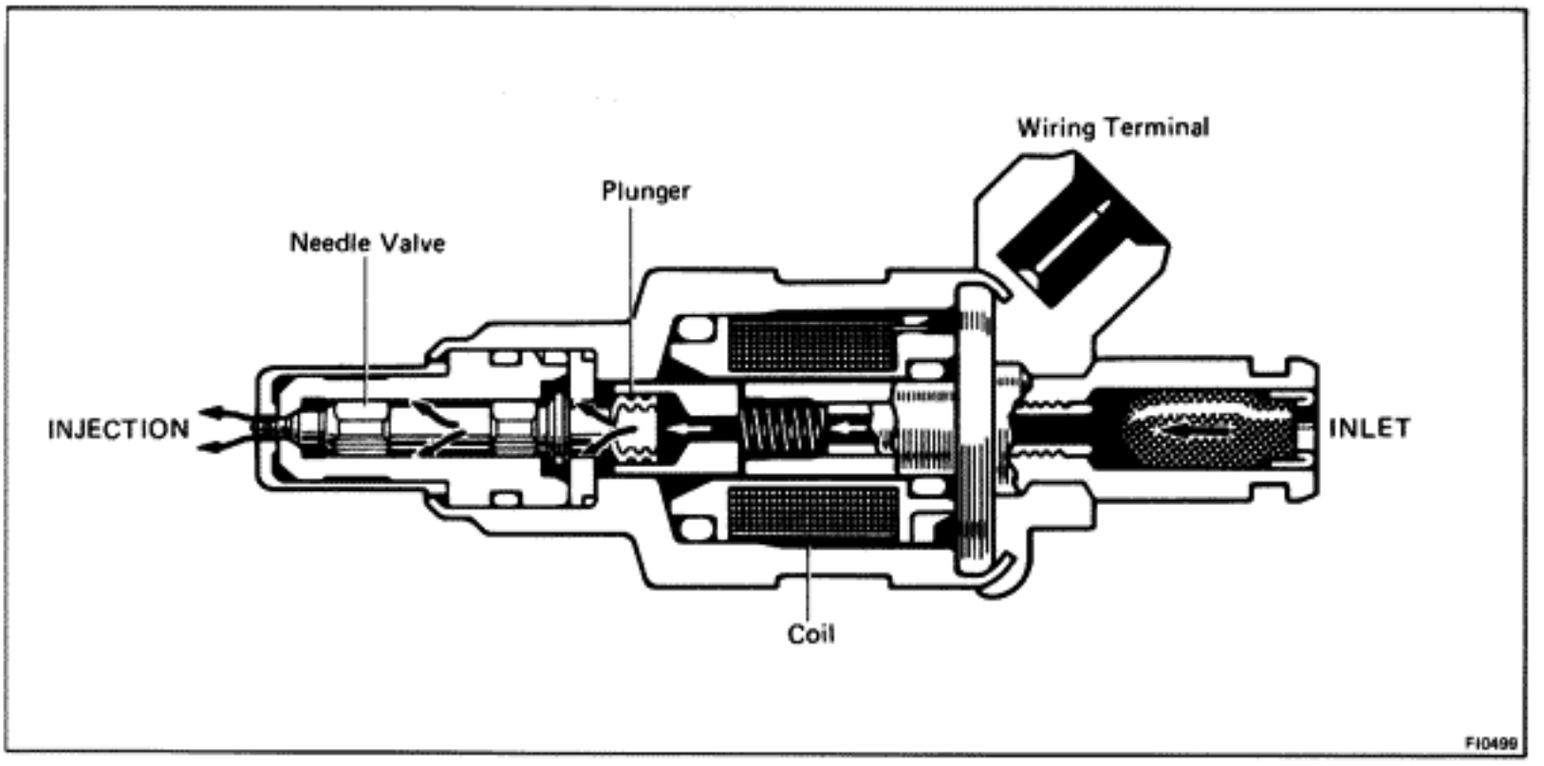

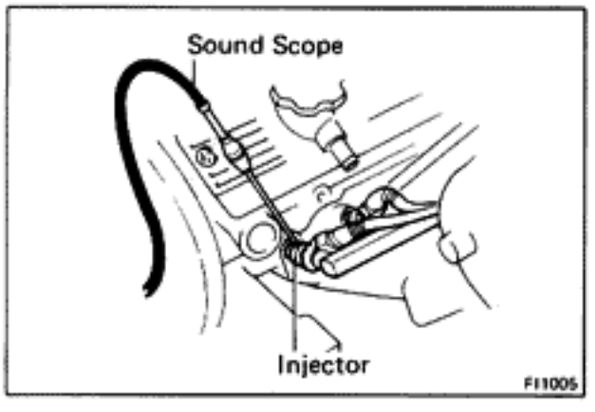

ON-VEHICLE INSPECTION

1. CHECK INJECTOR OPERATION

Check operating sound from the each injector.

(a) With the engine running or cranking, use a sound scope to check that there is normal operating noise in proportion to engine rpm.

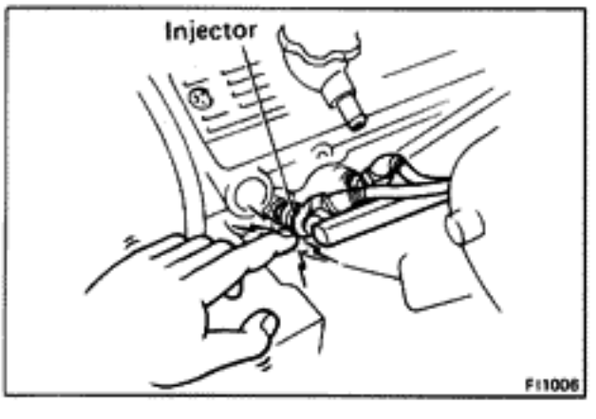

(b) If you have no sound scope, you can check the injector transmission operation with your finger.

If no sound or an unusual sound is heard, check the wiring connector, injector, resistor or injection signal from computer.

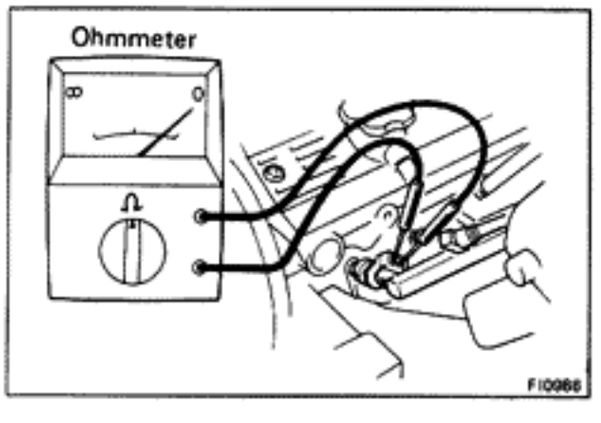

2. MEASURE RESISTANCE OF INJECTOR

(a) Disconnect the wiring connector from the injector.

(b) Using an ohmmeter, check the continuity of both terminals.

Resistance: 1.5 – 3.0 Ω

REMOVAL OF INJECTOR

1. **REMOVE AIR INTAKE CHAMBER**
   (See steps 1 to 10 on pages FI-49 to 50)
2. **REMOVE DISTRIBUTOR**
3. **REMOVE NO.1 FUEL PIPE**
4. **DISCONNECT AND REMOVE WIRING HARNESS**

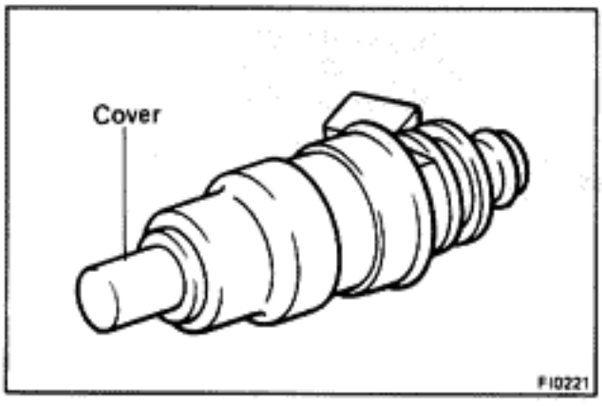

5. **REMOVE DELIVERY PIPE WITH INJECTORS**
   (a) Remove the four bolts, and then remove the delivery pipe with injectors.

   NOTE:
   - When removing the delivery pipe, be careful not to drop the injectors.
   - Do not remove the injector cover.

   (b) Remove the six insulators from the intake manifold.

INSPECTION OF INJECTOR

1. **TEST INJECTION OF INJECTORS**

   CAUTION: Keep clear of sparks during the test.

   (a) Connect the SST to the fuel filter outlet.

   SST 09268-41045

   (b) Connect the SST to the pressure regulator and the injector.

   SST 09268-41045

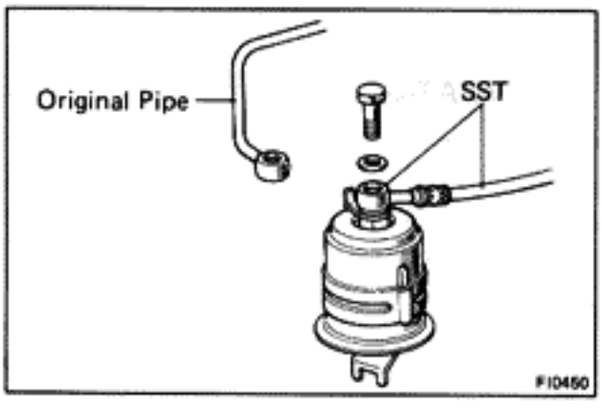

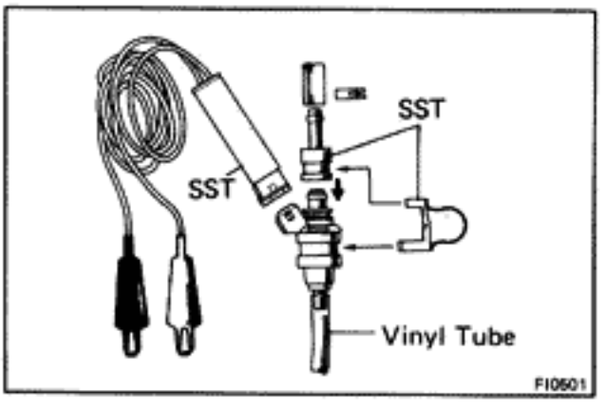

   (c) Hold the injector and hose with SST.

   SST 09842-30020

   (d) Put the injector into the graduated cylinder.

   NOTE: Install a suitable vinyl tube onto the injector to prevent gasoline from splashing out.

   (e) Connect the ground cable to the battery.

   (f) Turn the ignition switch ON.

   NOTE: Do not start the engine.

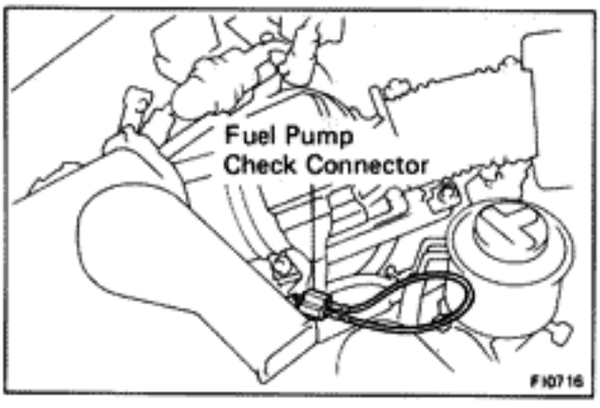

   (g) Using a service wire, short both terminals of the fuel pump check connector.

   NOTE: The fuel pump will operate.

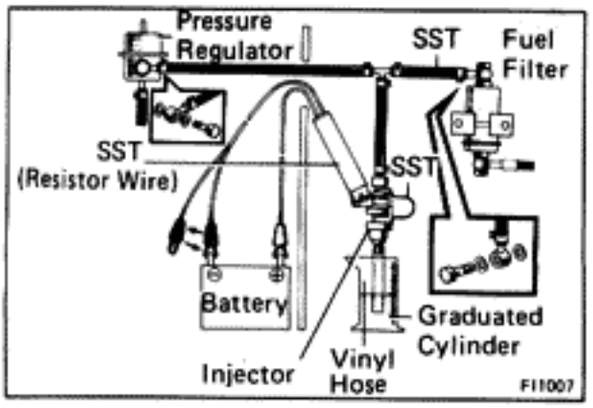

(h) Connect the SST to the battery for 15 seconds and measure the injection volume with a graduated cylinder.

Test each injector two or three times. If not within specified volume, clean or replace.

SST 09842-30020

Volume: 40 — 50 cc/15 sec. (2.4 — 3.1 cu in.)
Difference between each injector: Less than 6 cc (0.37 cu in.)

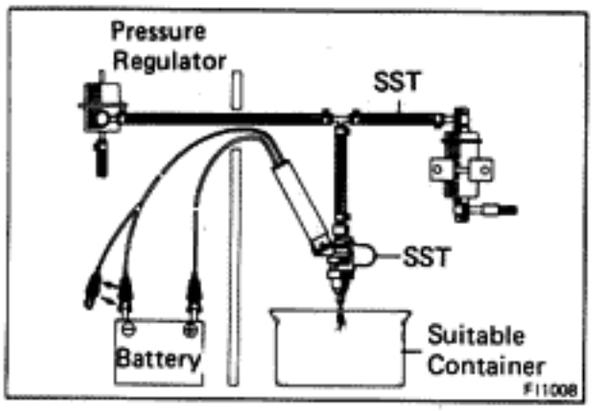

NOTE: If not within specified volume, clean or replace the injector.

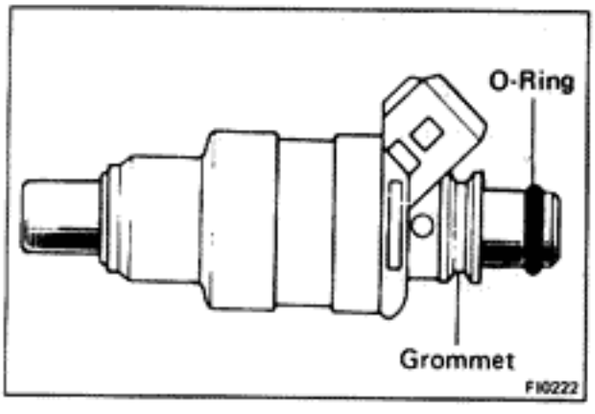

INSTALL OF INJECTORS

1. INSTALL INJECTORS INTO DELIVERY PIPE

(a) Install the grommet and a new O-ring to the injector.

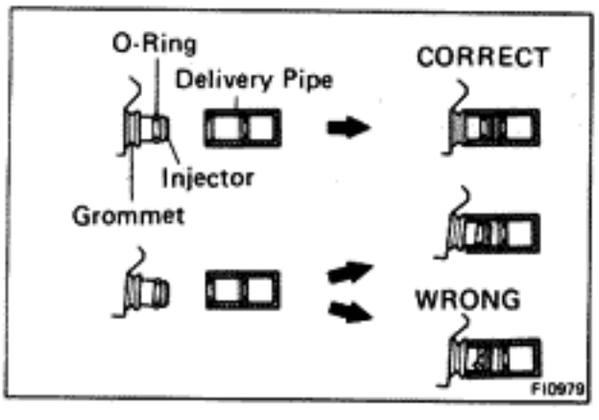

(b) Apply a thin coat of gasoline to the O-rings and install the injectors into the delivery pipe.

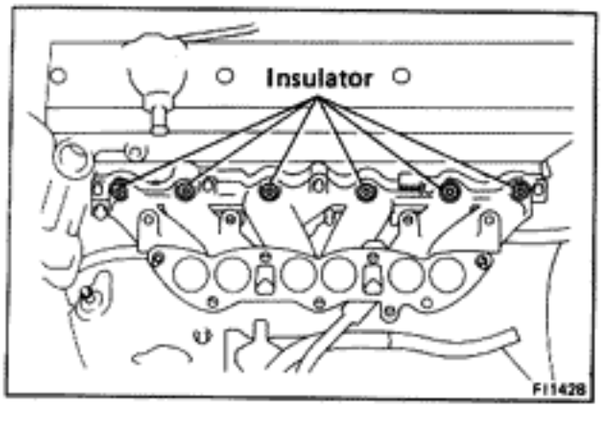

2. INSTALL DELIVERY PIPE WITH INJECTORS

(a) Install the six insulators into the injector hole of the intake manifold.

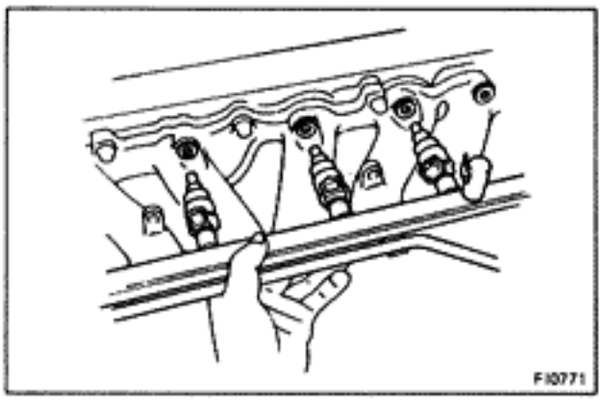

(b) Install the injectors together with the delivery pipe to the manifold.

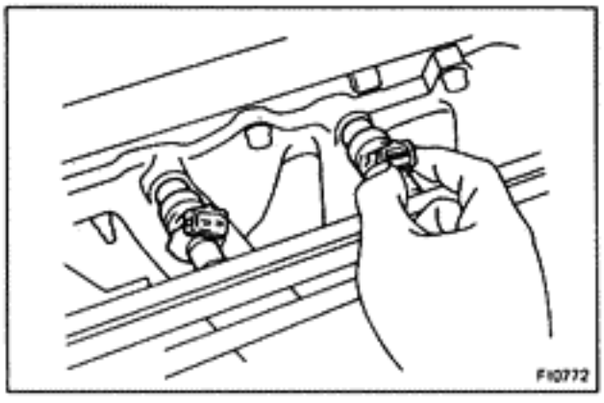

(c) Make sure that the injectors rotate smoothly.

NOTE: If the injectors do not rotate smoothly, the probable cause may be incorrect installation of O-rings. Replace the O-rings.

(d) Install four bolts, torque the bolts.

Torque: 140 kg-cm (10 ft-lb, 14 N·m)

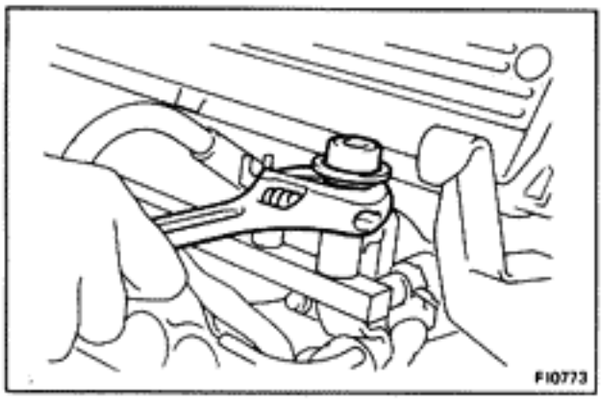

3. CONNECT AND INSTALL WIRING HARNESS

4. INSTALL NO.1 FUEL PIPE

(a) Finger tighten the pulsation damper and union bolt with new gaskets on the fuel pipe.

(b) Tighten then being careful not to bend the fuel pipe.

5. INSTALL DISTRIBUTOR AND SET TIMING
(See page IG-9, 10)

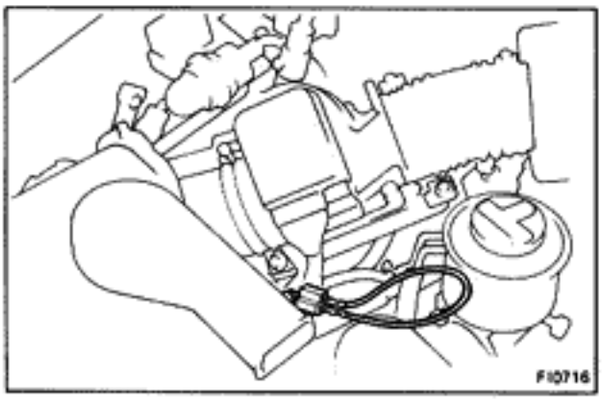

6. INSTALL AIR INTAKE CHAMBER
(See steps 2 to 11 on page FI-51)

7. CHECK FOR FUEL LEAKAGE

(a) With the ignition switch ON, use a service wire to short both terminals of the fuel pump check connector.

(b) Check for fuel leakage.

(c) Remove the service wire from the fuel pump check connector.

Fuel Tank and Line

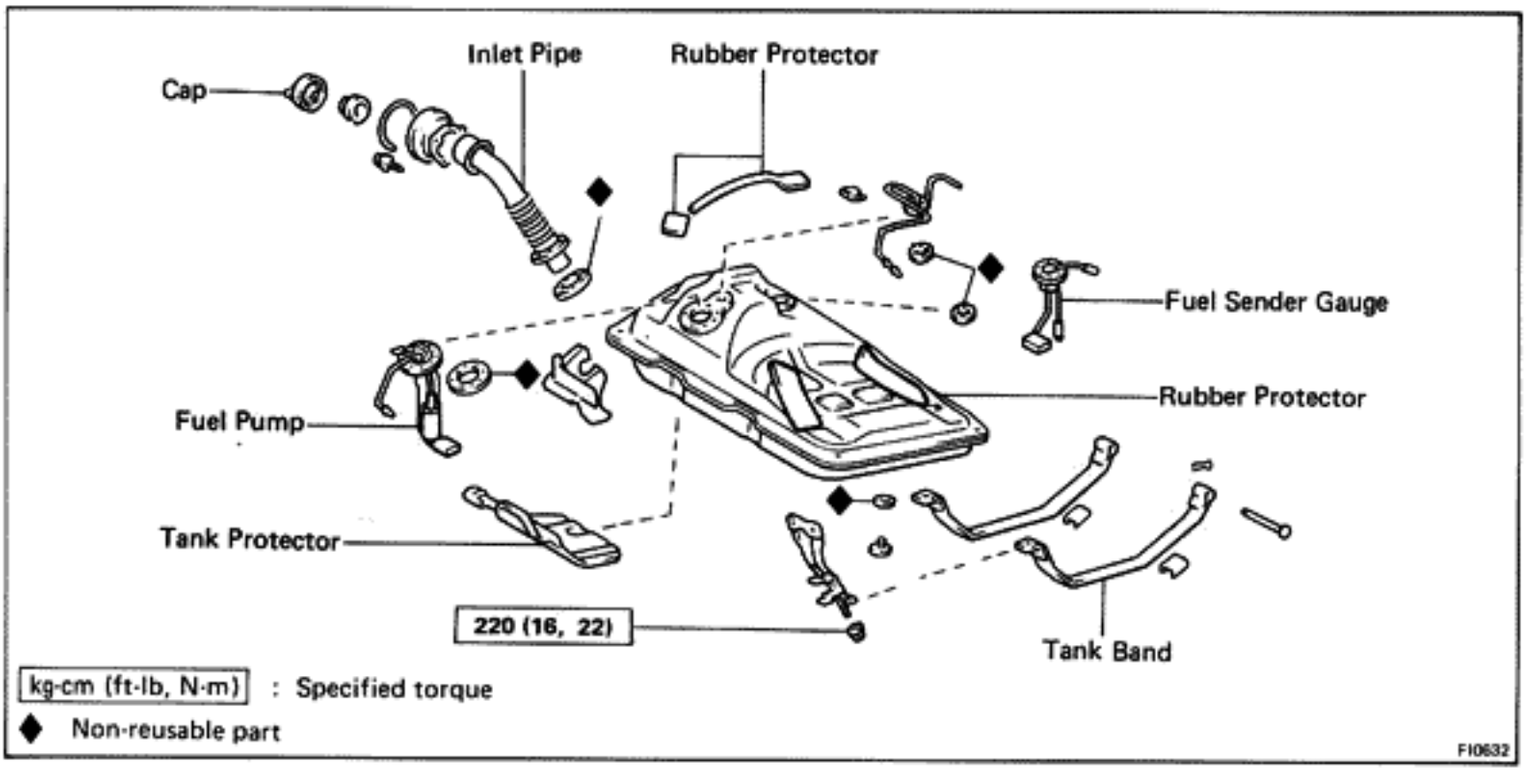

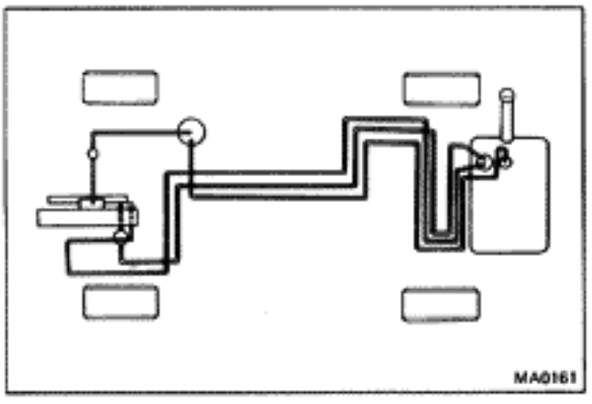

PRECAUTIONS

1. **Always use new gaskets when replacing the fuel tank or component parts.**
2. **When re-installing, be sure to include the rubber protectors on the upper surfaces of the fuel tank and tank band.**
3. **Apply the proper torque to all tightening parts.**

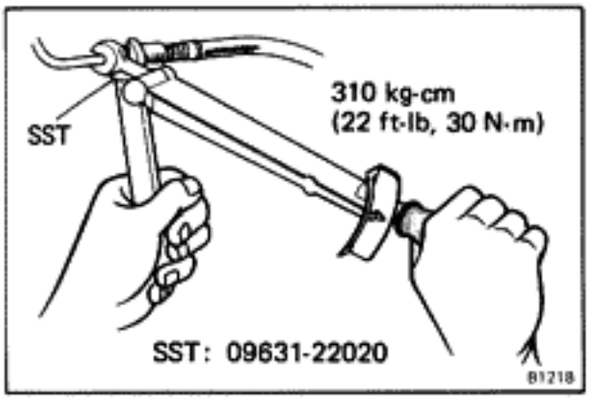

INSPECT FUEL LINES AND CONNECTIONS

(a) Inspect the fuel lines for cracks, leakage or connections or deformation.

(b) Inspect the fuel tank vapor vent system hoses and connections for looseness, sharp bends or damage.

(c) Inspect the fuel tank for deformation, cracks, fuel leakage or tank band looseness.

(d) Inspect the inlet pipe for damage or fuel leakage.

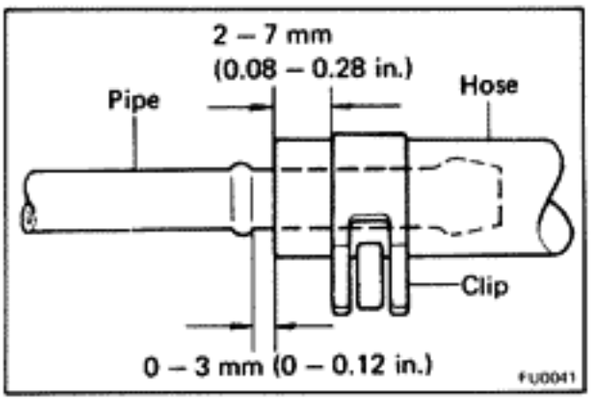

(e) Hose and tube connections are as shown in the illustration.

If problem is found, repair or replace the parts as necessary.

AIR INDUCTION SYSTEM

Air Flow Meter

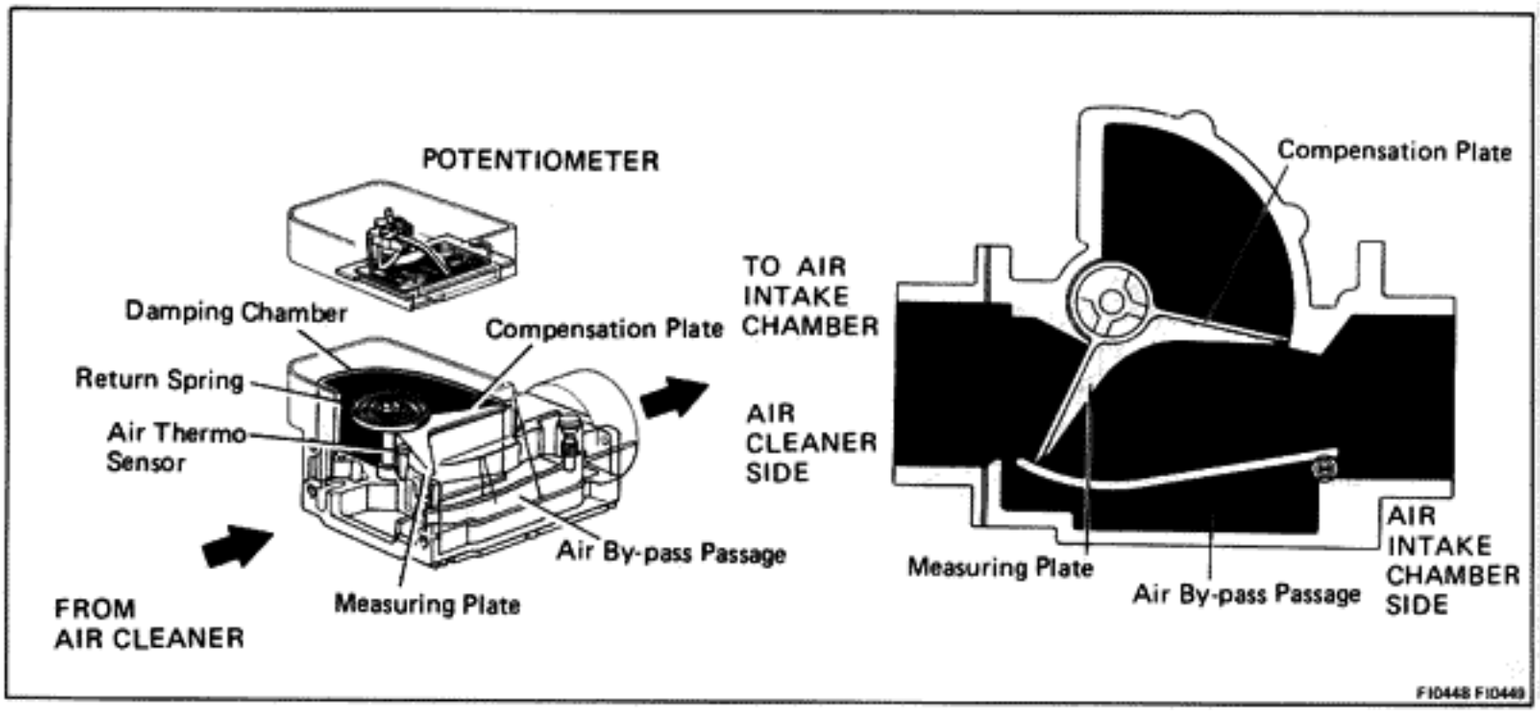

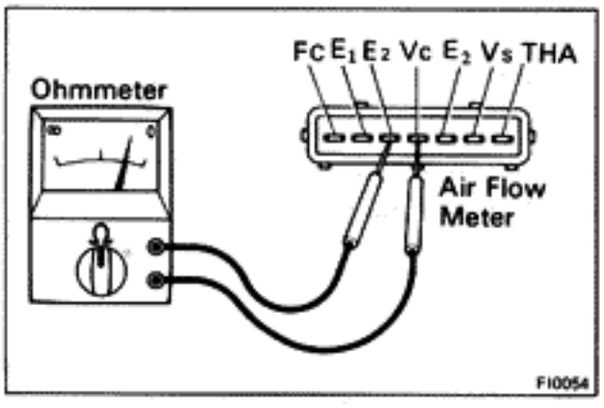

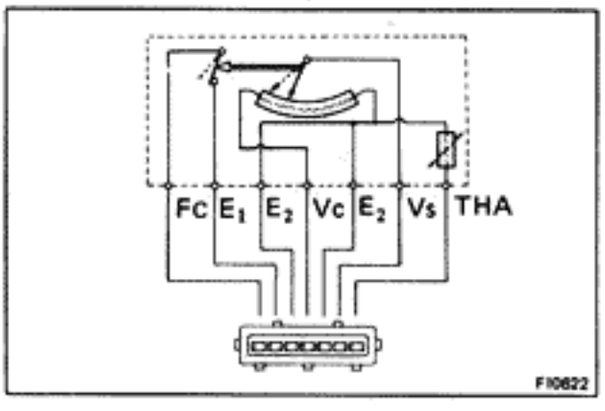

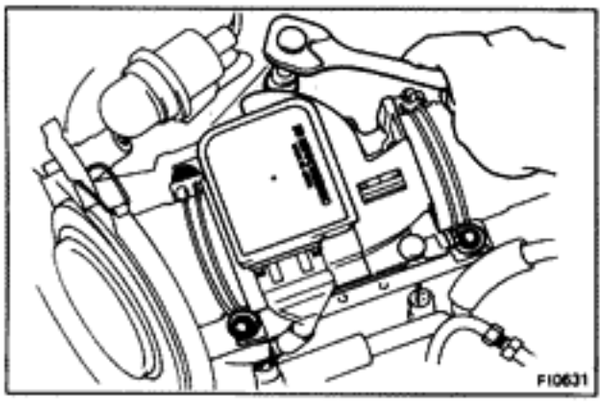

ON-VEHICLE INSPECTION

MEASURE RESISTANCE OF AIR FLOW METER

(a) Unplug the wiring connector from the air flow meter.

(b) Using an ohmmeter, measure the resistance between each terminal.

Between terminals	Resistance	Temperature
E_2 — V_s	20 — 400 Ω	—
E_2 — V_c	200 — 400 Ω	—
E_2 — THA	10 — 20 kΩ	−20°C (−4°F)
	4 — 7 kΩ	0°C (32°F)
	2 — 3 kΩ	20°C (68°F)
	0.9 — 1.3 kΩ	40°C (104°F)
	0.4 — 0.7 kΩ	60°C (140°F)
E_1 — F_C	Infinity	—

If not within specification, replace the air flow meter.

REMOVAL OF AIR FLOW METER

1. **DISCONNECT NO. 2 AND NO. 3 AIR CLEANER HOSES**

2. **DISCONNECT AIR FLOW METER CONNECTOR**

3. **REMOVE AIR FLOW METER**

   Remove four nuts and one bolt and air flow meter.

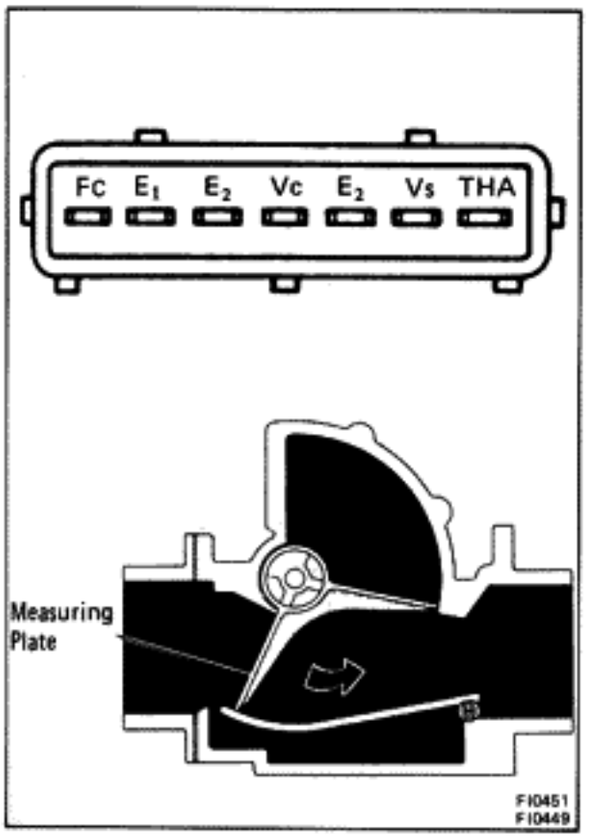

INSPECTION OF AIR FLOW METER

MEASURE RESISTANCE OF AIR FLOW METER

Using an ohmmeter, measure the resistance between each terminal by moving the measuring plate.

Between terminals	Resistance Ω	Measuring plate Opening
E_1 — Fc	Infinity	Fully closed
	Zero	Other than closed position
E_2 — Vs	20 — 400	Fully closed
	20 — 1000	Fully closed to fully open position

NOTE: Resistance between E_2 and Vs will change in accordance with the measuring plate opening.

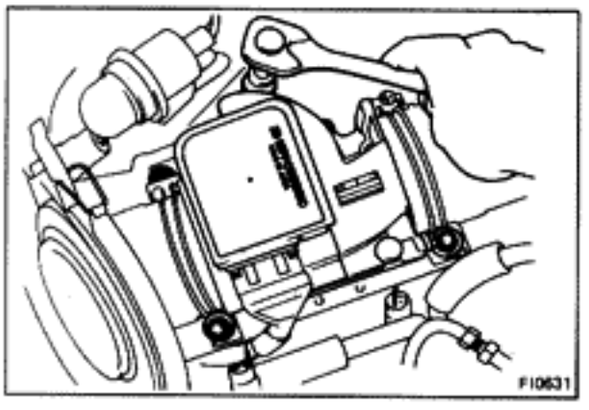

INSTALLATION OF AIR FLOW METER

1. **INSTALL AIR FLOW METER**
   Install air flow meter with four nuts and one bolts.
2. **CONNECT AIR FLOW METER CONNECTOR**
3. **INSTALL NO. 2 AND NO. 3 AIR CLEANER HOSES**

Idle Speed Control (ISC) Valve

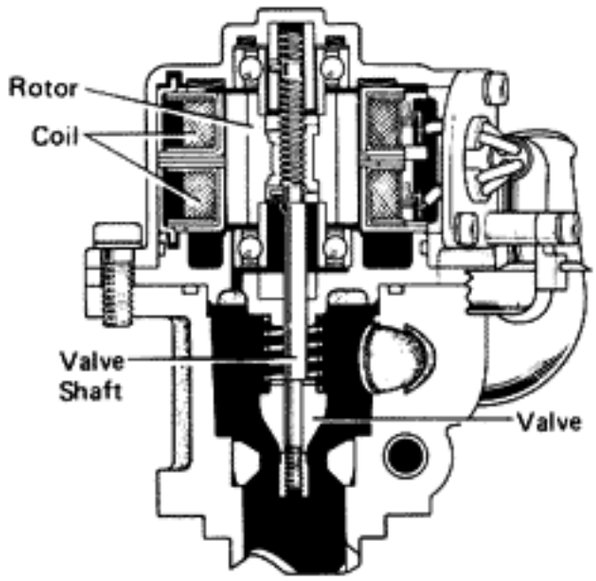

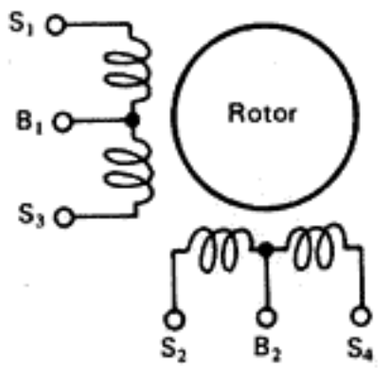

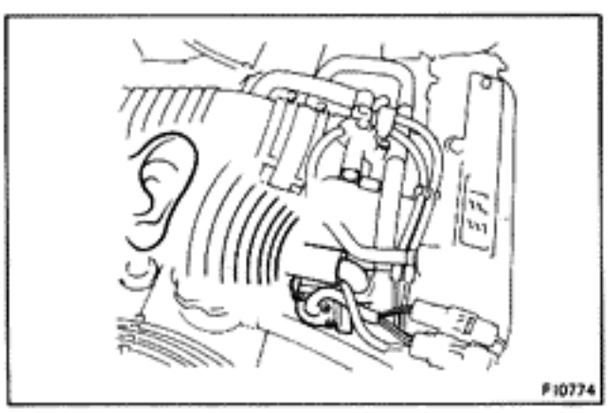

CHECK OPERATING SOUND FROM ISC VALVE

Confirm that there is a clicking sound immediately after stopping the engine.

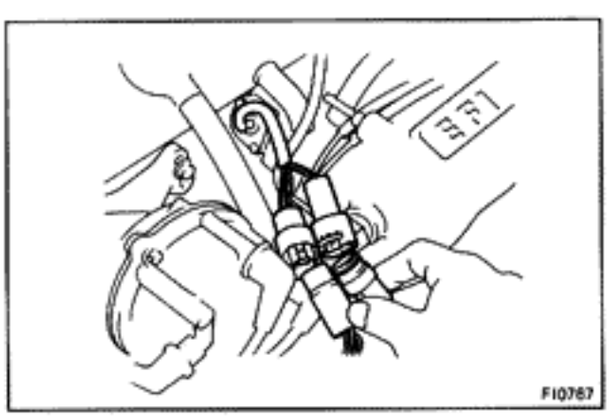

REMOVAL OF ISC VALVE

1. **DRAIN COOLANT**
2. **DISCONNECT TWO ISC VALVE CONNECTORS**

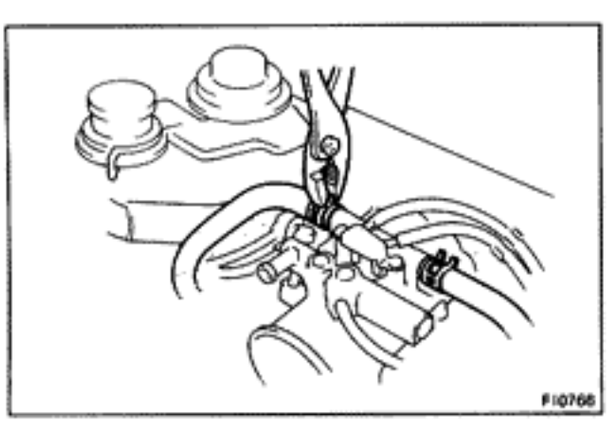

3. **DISCONNECT FOLLOWING HOSES FROM ISC VALVE BODY:**
   (a) Two water by-pass hoses
   (b) Air hoses
4. **REMOVE TWO BOLTS AND ISC VALVE BODY**

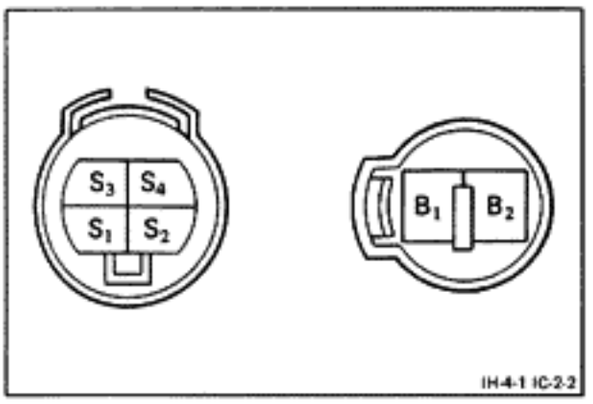

INSPECTION OF ISC VALVE

1. CHECK RESISTANCE OF ISC VALVE

Using an ohmmeter, measure the resistance between terminals B_1 — S_1 or S_3 and B_2 — S_2 or S_4.

Resistance: **B_1 — S_1 or S_3 10 — 30 Ω**
B_2 — S_2 or S_4 10 — 30 Ω

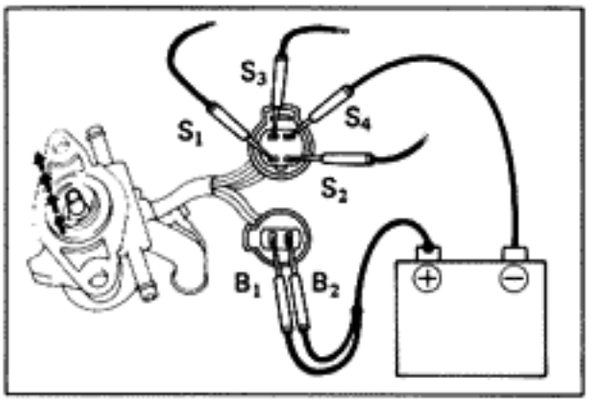

2. INSPECT OPERATION OF ISC VALVE

(a) Apply battery voltage to terminals B_1 and B_2 and while repeatedly grounding S_1 — S_2 — S_3 — S_4 — S_1 in sequence, check that the valve moves toward the closed position.

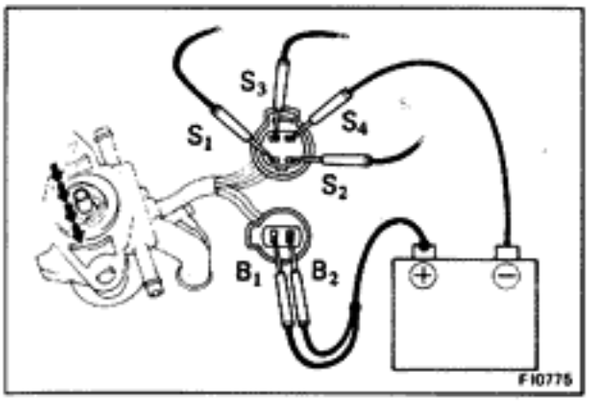

(b) Apply battery voltage to terminals B_1 and B_2 and while repeatedly grounding S_4 — S_3 — S_2 — S_1 — S_4 in sequence, check that the valve moves toward the open position.

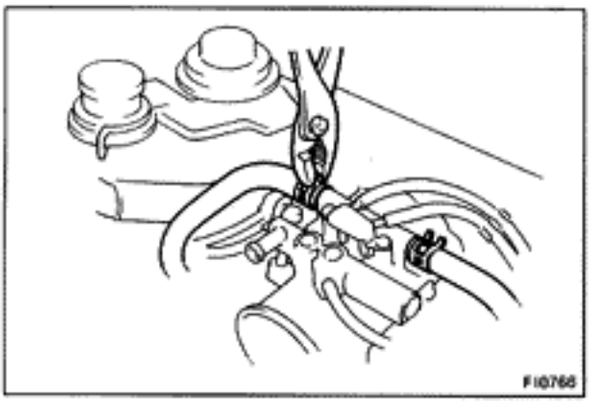

INSTALLATION OF ISC VALVE

1. INSTALL ISC VALVE BODY AND TWO BOLTS

2. CONNECT FOLLOWING HOSES TO ISC VALVE BODY:

(a) Two air hoses

(b) Two water by-pass hoses

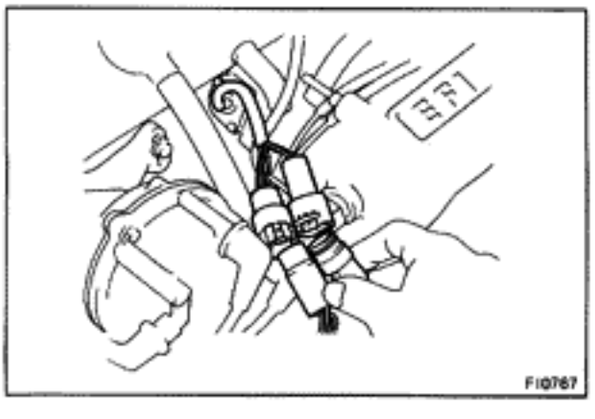

3. CONNECT TWO ISC VALVE CONNECTORS

4. FILL WITH COOLANT

INSPECTION OF IDLE SPEED

1. INITIAL CONDITIONS

(a) Air cleaner installed

(b) Normal engine operating temperature

(c) All pipes and hoses of air intake system connected

(d) All accessories switched off

(e) All vacuum lines properly connected (i.e., EGR systems, etc.)

(f) EFI system wiring connectors fully plugged

(g) Ignition timing set correctly

(h) Transmission in N range

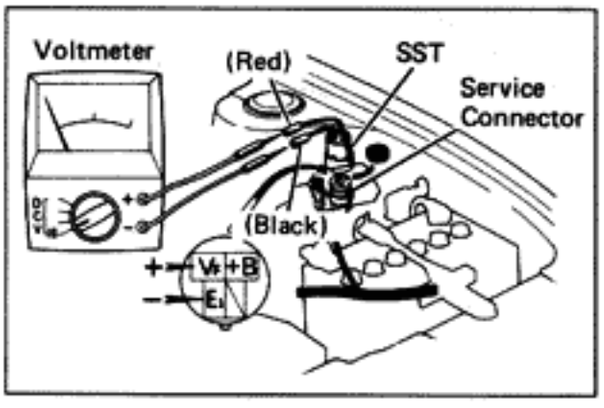

2. CHECK IDLE SPEED

(a) Remove the rubber cap from the 4-terminal service connector (yellow) and connect an EFI idle adjusting wiring harness (SST) to it.

SST 09842-14010

(b) Connect positive testing probe to the red wire of the SST and negative testing probe to the black wire.

(c) Warm up the Ox sensor with the engine at 2,500 rpm for about 2 minutes.

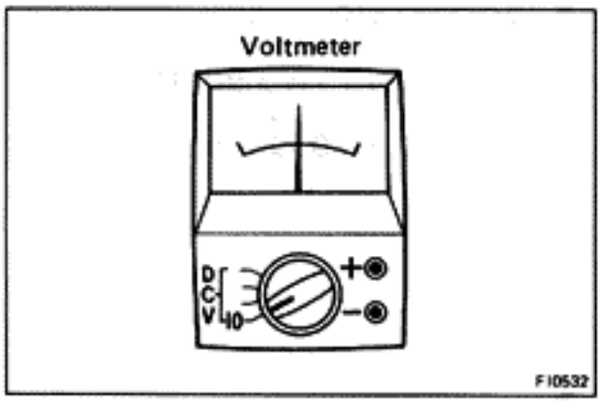

(d) Maintain the engine speed at 2,500 rpm.

(e) Check that the needle of the voltmeter fluctuates 8 times or more in 10 seconds.
If not, inspect the EFI system and replace the Oxygen sensor, if necessary.

A/C S/W	N range	D range
OFF	650 rpm	600 rpm
ON	900 rpm	750 rpm

(f) With the engine idling, check that the idle rpm is standard.

(g) With the engine idling, check that the V_F voltage is 2.5 ± 1.25 V. If not, check the intake system for leakage. If no leakage, investigate other areas.

Throttle Body

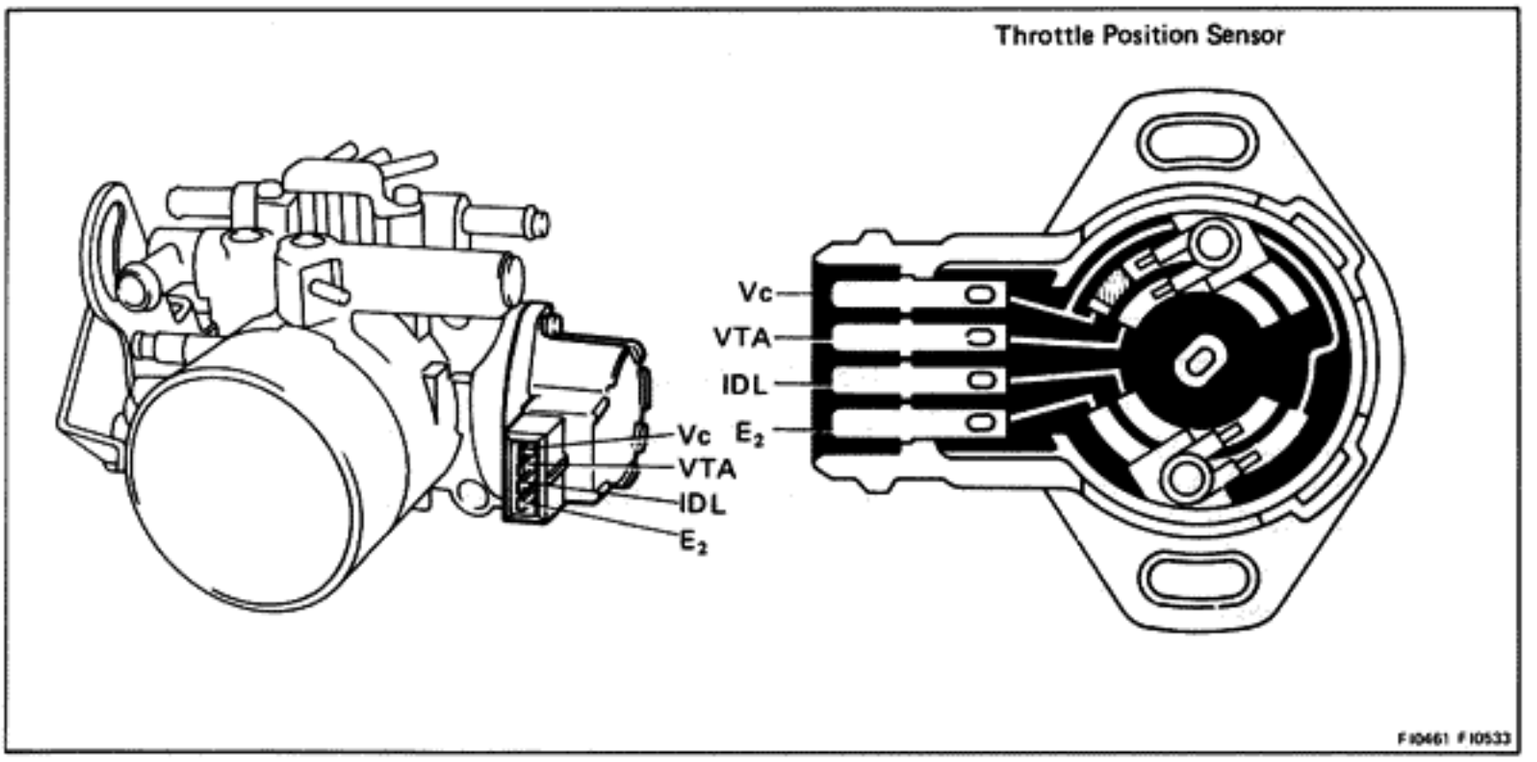

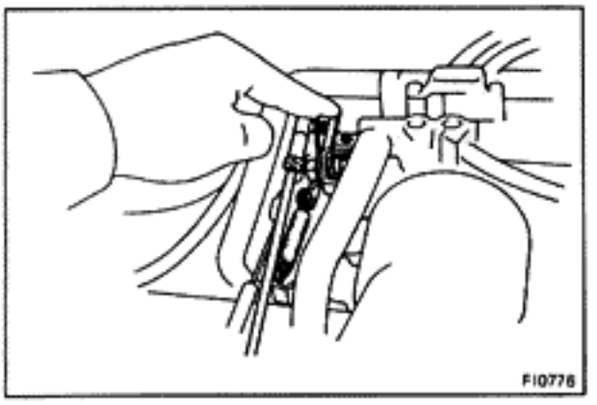

ON-VEHICLE CHECK

1. CHECK THROTTLE BODY

(a) Check that the throttle linkage moves smoothly.

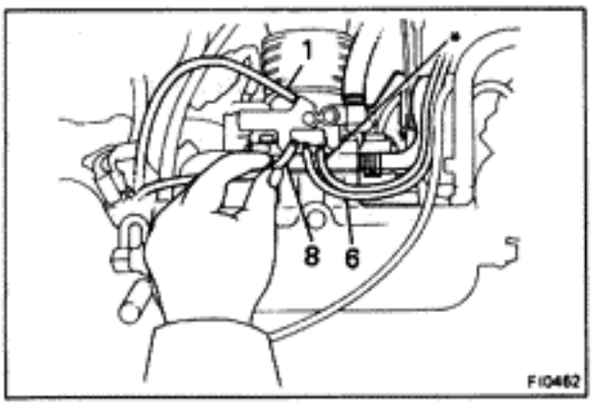

(b) Check the vacuum at each port.

- Start the engine.
- Check the vacuum with your finger.

Part No.	At idling	Other than idling
8	No vacuum	Vacuum
*	No vacuum	Vacuum
1	No vacuum	No vacuum
6	No vacuum	Vacuum

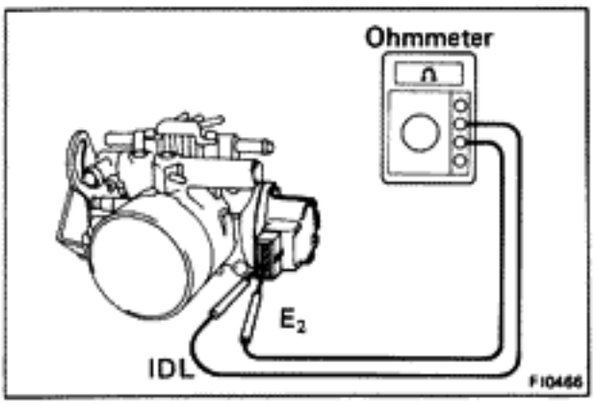

2. CHECK THROTTLE POSITION SENSOR

(a) Check the resistance between the terminals.

- Unplug the connector from the sensor.
- Insert a thickness gauge between the throttle stop screw and stop lever.
- Using an ohmmeter, check the resistance between each terminal.

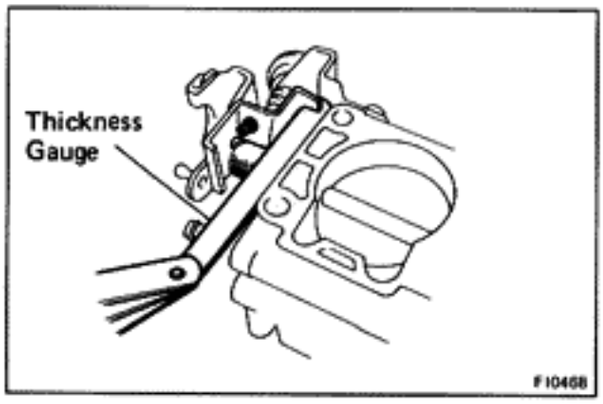

Clearance between lever and stop screw	Between terminals	Resistance
0 mm (0 in.)	VTA — E_2	0.2 — 0.8 kΩ
0.50 mm (0.0197 in.)	IDL — E_2	0 — 100 Ω
0.90 mm (0.0354 in.)	IDL — E_2	Infinity
Throttle valve fully opened position	VTA — E_2	3.3 — 10 kΩ
—	V_C — E_2	3 — 7 kΩ

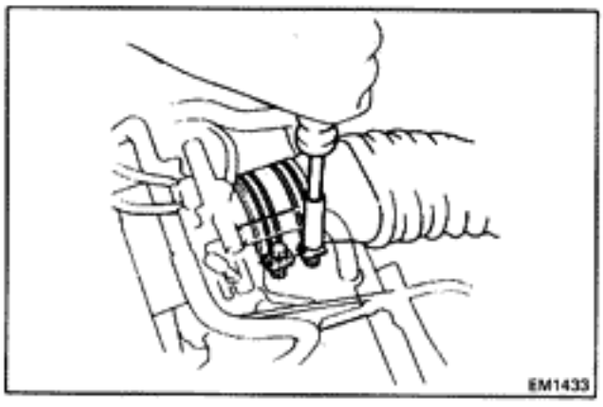

REMOVAL OF THROTTLE BODY

1. **REMOVE AIR INTAKE CONNECTOR**
2. **DRAIN COOLANT FROM THROTTLE BODY**
3. **DISCONNECT FOLLOWING HOSES:**
   (a) No. 1 and No. 2 water by-pass hoses
   (b) PCV hose from the throttle body
   (c) Label and disconnect emission control hoses

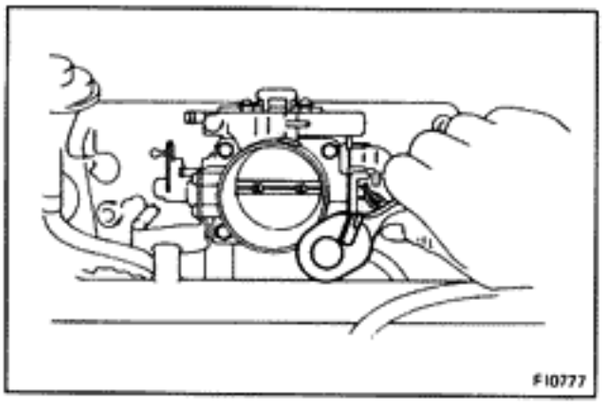

4. **DISCONNECT THROTTLE SENSOR CONNECTOR**
5. **REMOVE THROTTLE BODY**
   Remove the four bolts and remove the throttle body and gasket.

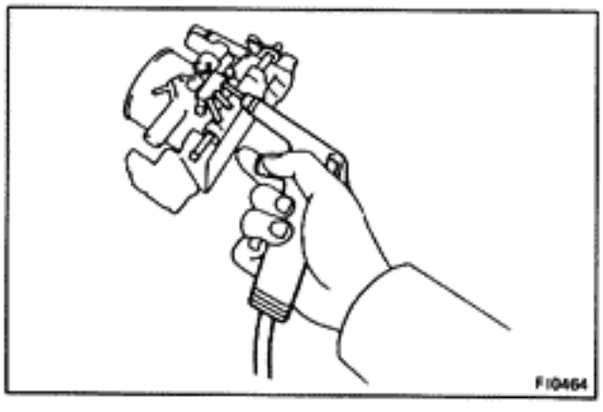

INSPECTION OF THROTTLE BODY

1. **CLEAN THROTTLE BODY BEFORE INSPECTION**
   (a) Wash and clean the cast parts with a soft brush in carburetor cleaner.
   (b) Using compressed air, blow all passages and apertures in the throttle body.

   CAUTION: To prevent deterioration, do not clean the throttle position sensor.

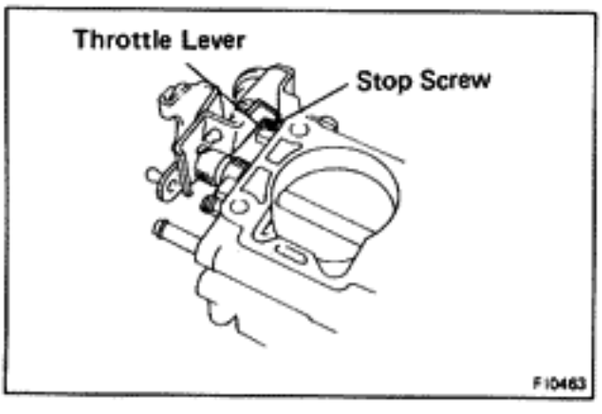

2. **CHECK THROTTLE VALVE**
   Check that there is no clearance between the throttle stop screw and throttle lever when the throttle valve is fully closed.

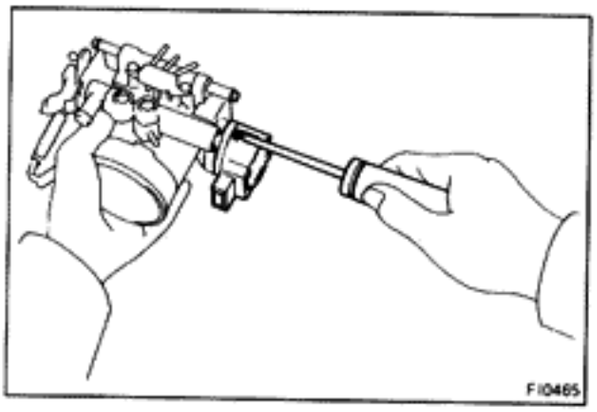

3. ADJUST THROTTLE POSITION SENSOR

(a) Loosen the two sensor screws.

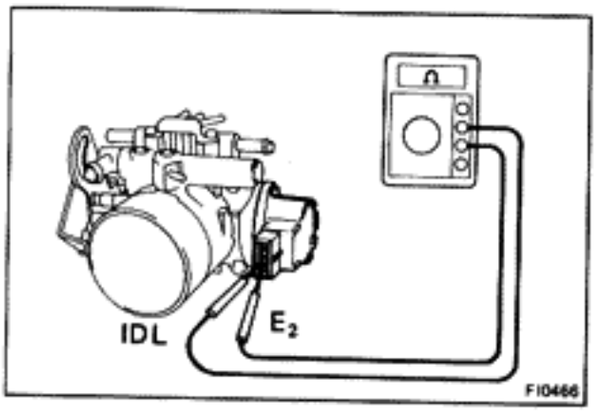

(b) Connect the ohmmeter to the throttle position sensor terminals IDL and E_2.

(c) Insert a thickness gauge (0.50 mm or 0.0197 in.) between the throttle stop screw and lever.
Gradually turn the sensor clockwise until the ohmmeter deflects, and secure the sensor with two screws.

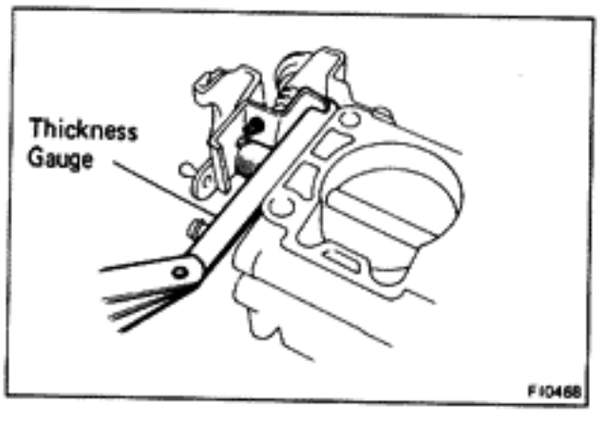

(d) Using a thickness gauge, recheck the continuity between terminals IDL and E_2.

Clearance between lever and stop screw	Continuity (IDL — E_2)
0.50 mm (0.0197 in.)	Continuity
0.90 mm (0.0354 in.)	No continuity

REPLACEMENT OF THROTTLE POSITION SENSOR

1. REMOVE THROTTLE POSITION SENSOR

Remove two screws and the sensor from the throttle body.

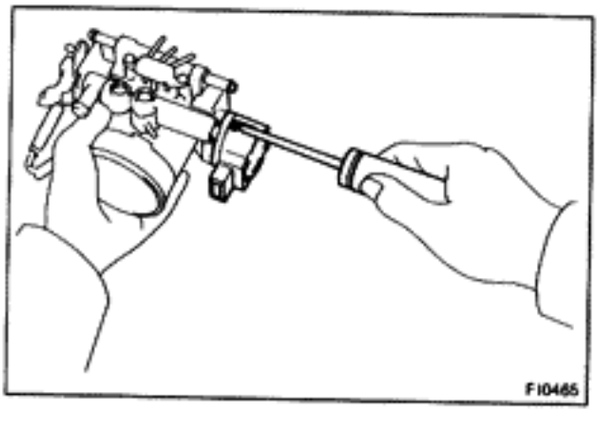

2. INSTALL THROTTLE POSITION SENSOR

(a) Check that the throttle valve is fully closed.

(b) Place the sensor on the throttle body as shown in the figure.

(c) Turn the sensor clockwise, and temporarily install the two screws.

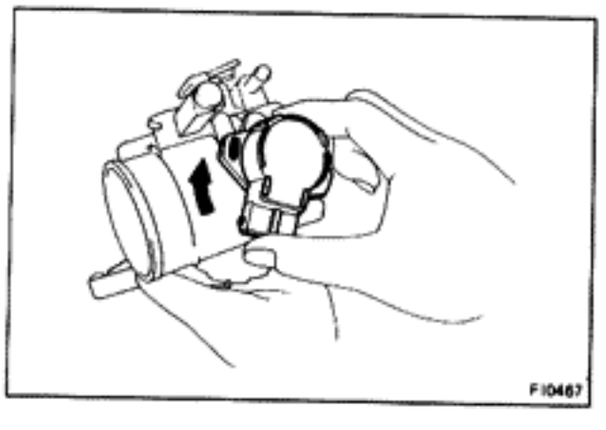

3. ADJUST THROTTLE POSITION SENSOR

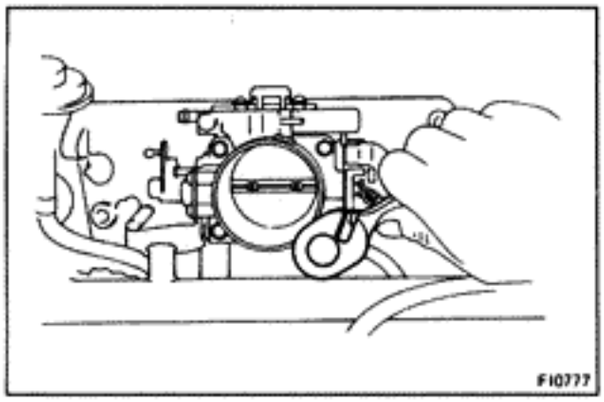

INSTALLATION OF THROTTLE BODY

1. **INSTALL THROTTLE BODY**

   Place a new gasket and install the throttle body and four bolts.

2. **CONNECT THROTTLE SENSOR CONNECTOR**

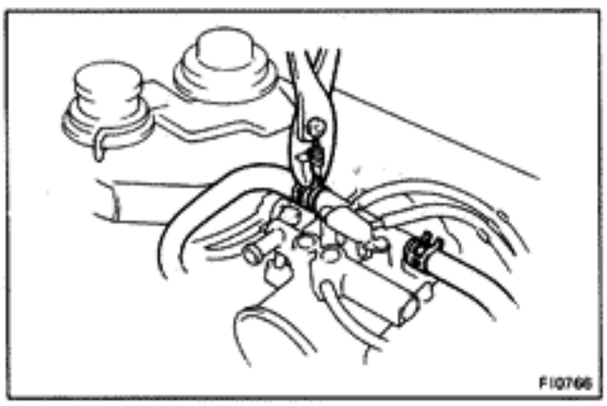

3. **CONNECT FOLLOWING HOSES:**
   (a) Emission control hoses
   (b) PCV hose to throttle body
   (c) No. 1 and No. 2 water by-pass hoses

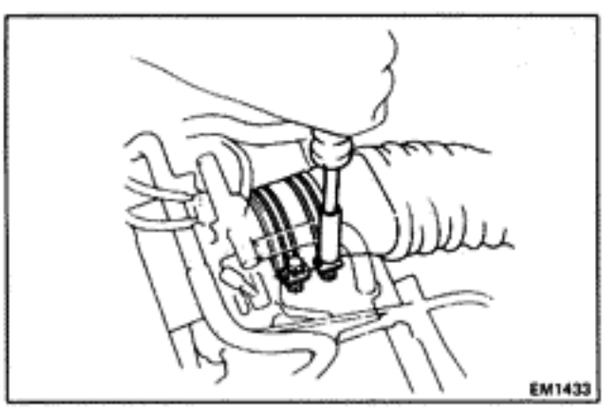

4. **INSTALL AIR INTAKE CONNECTOR**

5. **FILL WITH COOLANT**

ELECTRONIC CONTROL SYSTEM
Location of Electronic Control Parts

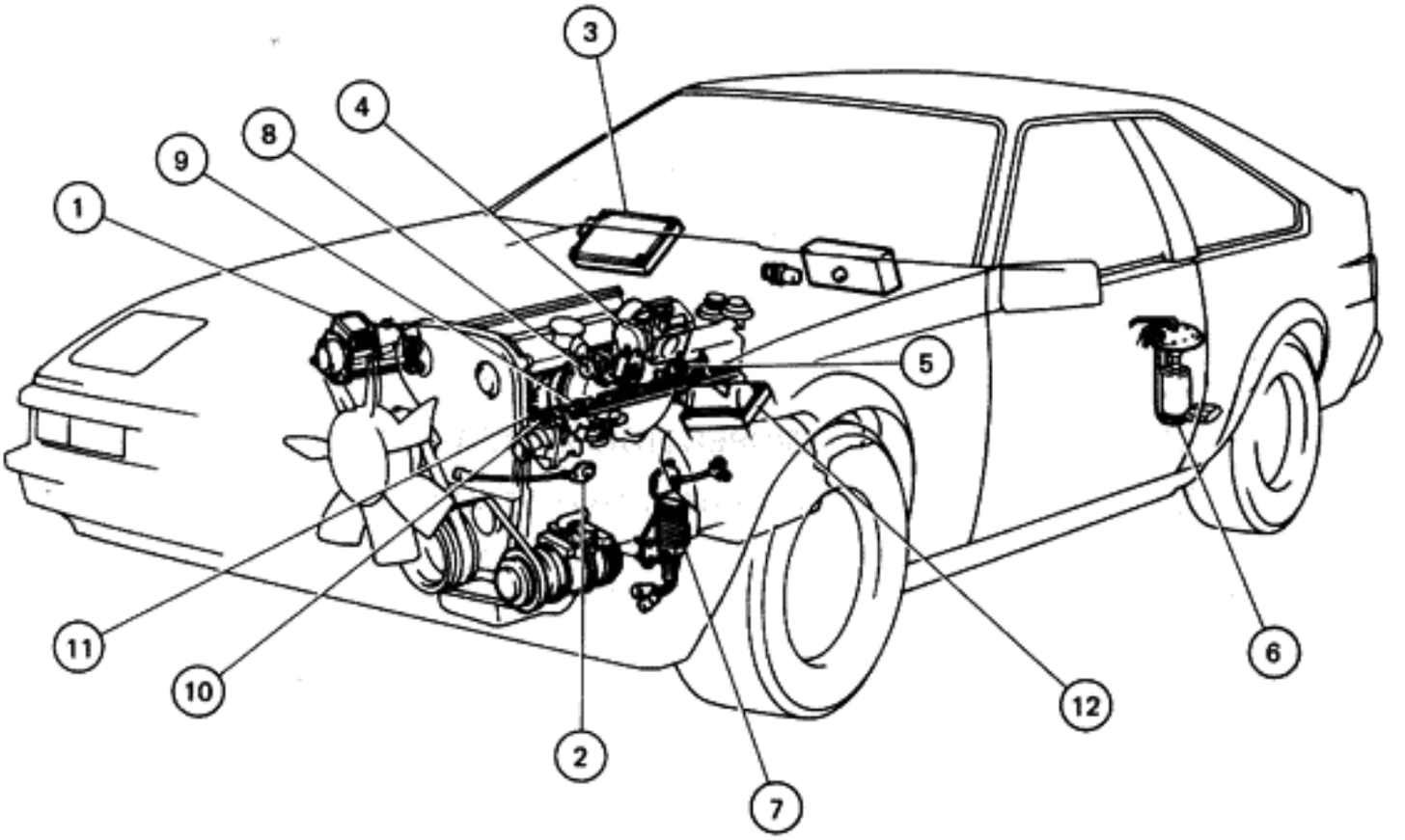

1. Air Flow Meter
2. Oxygen Sensor
3. ECU
4. Throttle Position Sensor
5. Cold Start Injector
6. Fuel Pump
7. Resistor
8. ISC Valve
9. Injector
10. Water Temp. Sensor
11. Cold Start Injector Time Switch
12. Igniter w/Ignition Coil

FI0637

Main Relay

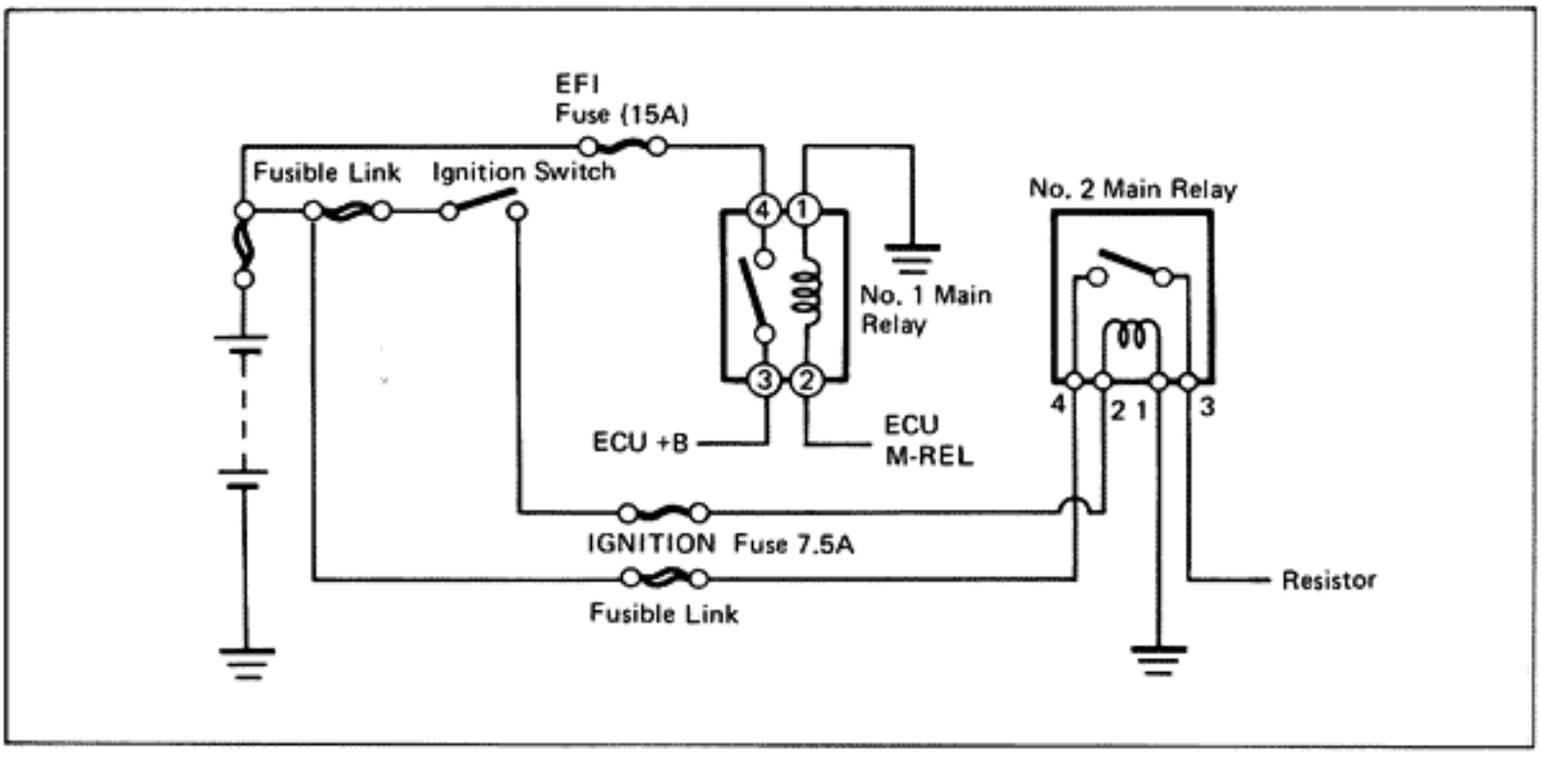

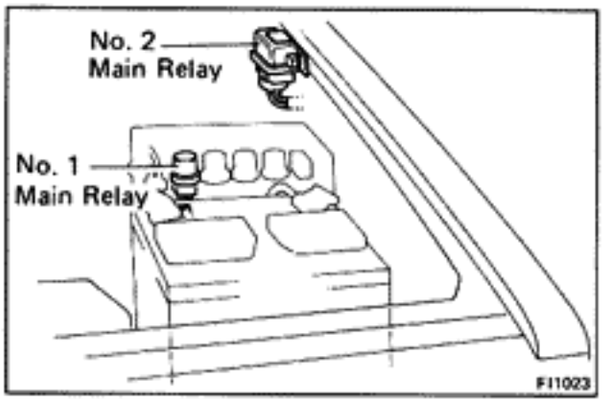

INSPECTION OF MAIN RELAYS

1. CHECK MAIN RELAYS OPERATION

(a) Turn on the ignition switch.

(b) At this time an operation noise will occur from the relay.

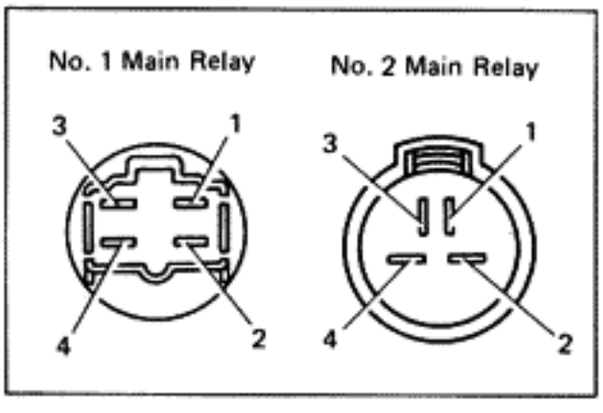

2. MEASURE RESISTANCE OF MAIN RELAYS

(a) Remove the No. 1 main relay from the relay block. Unplug the connector from the No. 2 main relay.

(b) Measure the resistance between each terminal.

	Between terminals	Resistance Ω
No. 1 Main Relay	1 — 2	40 — 60
	3 — 4	Infinity
No. 2 Main Relay	1 — 2	60 — 120
	3 — 4	Infinity

Circuit Opening Relay

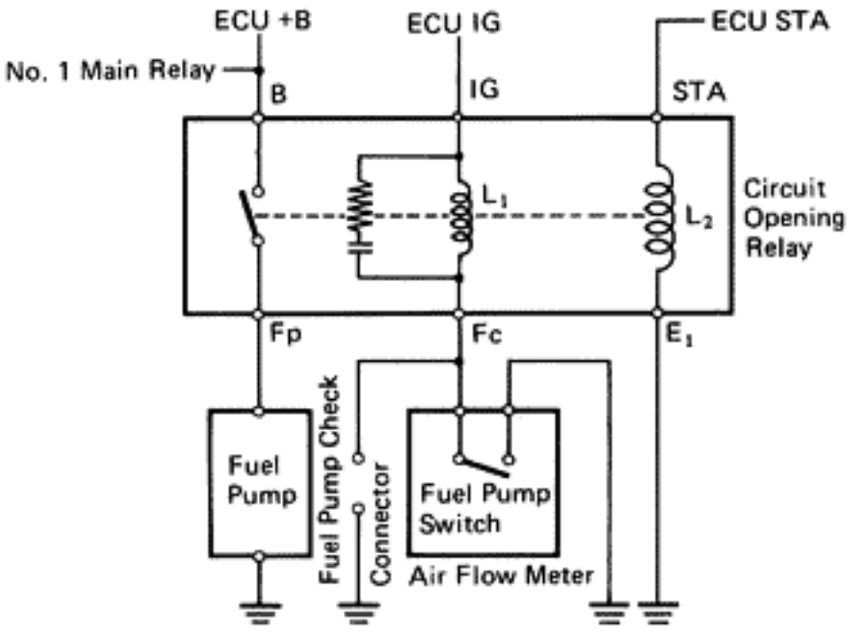

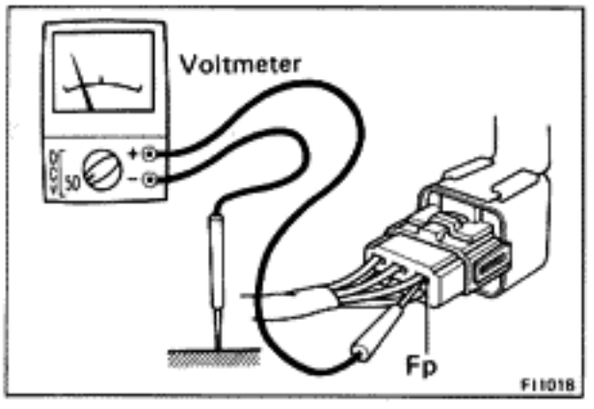

INSPECTION OF CIRCUIT OPENING RELAY

1. CHECK CIRCUIT OPENING RELAY OPERATION

(a) Remove the left kick panel.

(b) Using a voltmeter, check that the meter indicates voltage at F_P terminal during engine cranking and running.

(c) Stop the engine.

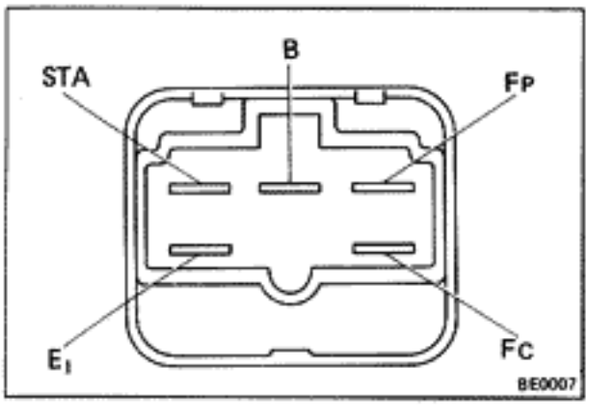

2. MEASURE RESISTANCE OF CIRCUIT OPENING RELAY

(a) Disconnect the connector.

(b) Measure the resistance between each terminal.

Between terminals	Resistance (Ω)
STA — E_1	17 — 25
IG — Fc	88 — 132
+B — F_P	Infinity

Solenoid Resistor

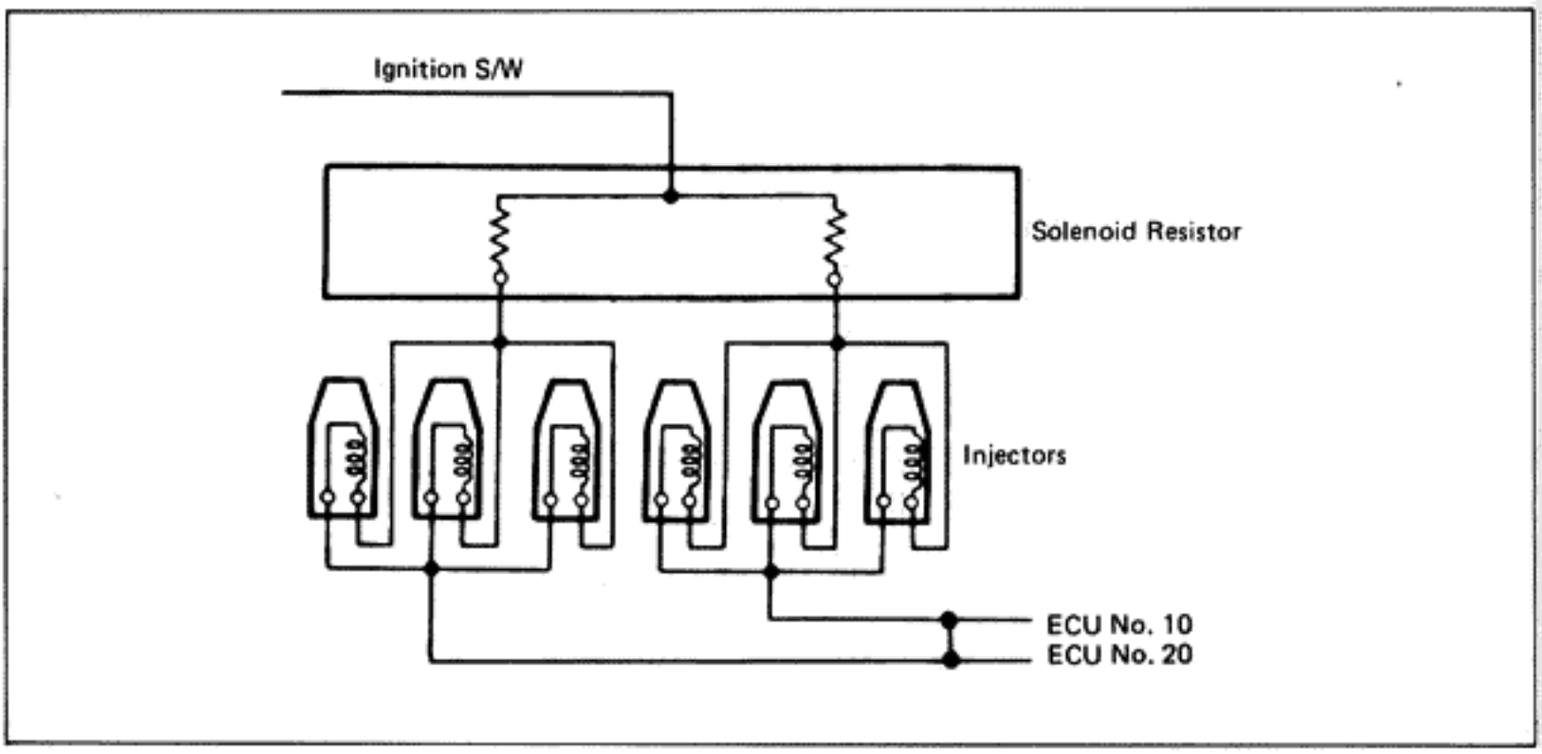

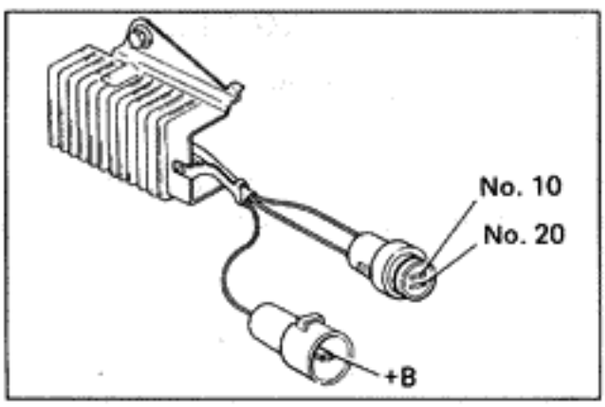

INSPECTION OF SOLENOID RESISTOR

MEASURE RESISTANCE OF SOLENOID RESISTOR

Using an ohmmeter, measure the resistance between +B and other terminals.

Resistance: 2 Ω each

Start Injector Time Switch

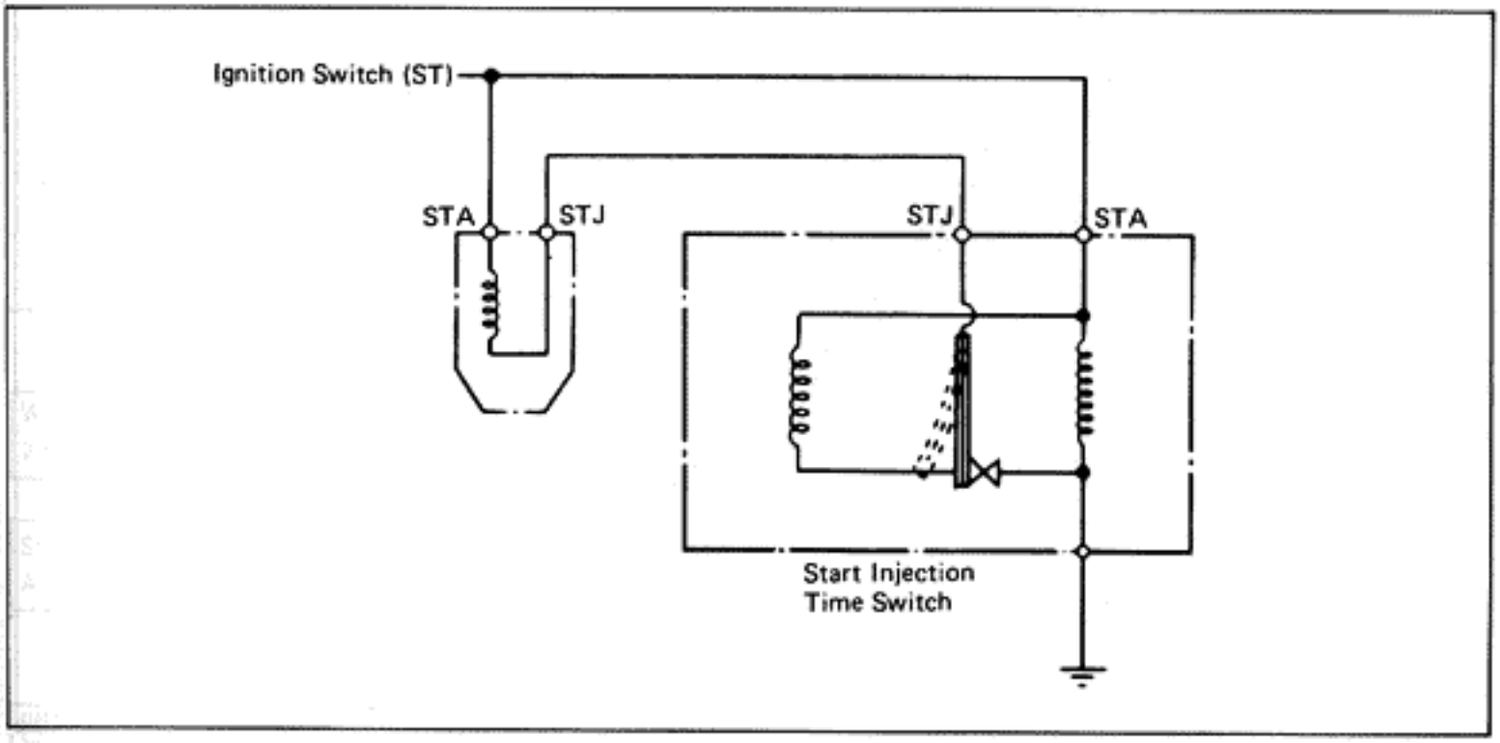

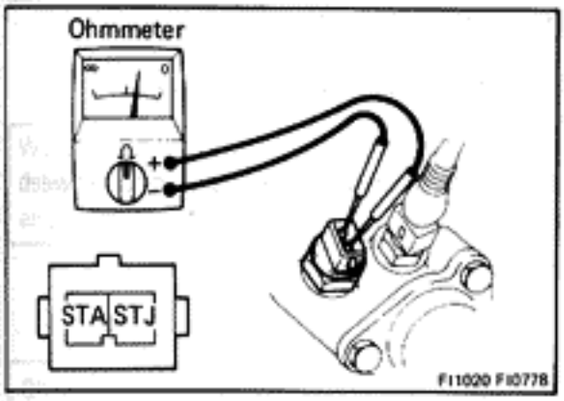

INSPECTION OF START INJECTOR TIME SWITCH

MEASURE RESISTANCE OF START INJECTOR TIME SWITCH

(a) Disconnect the connector.

(b) Using an ohmmeter, measure the resistance between each terminal.

Between terminals	Resistance (Ω)	Coolant temperature
STA — STJ	24 — 40	below 30°C (86°F)
	40 — 60	above 40°C (104°F)
STA — Ground	20 — 80	—

Water Temp. Sensor

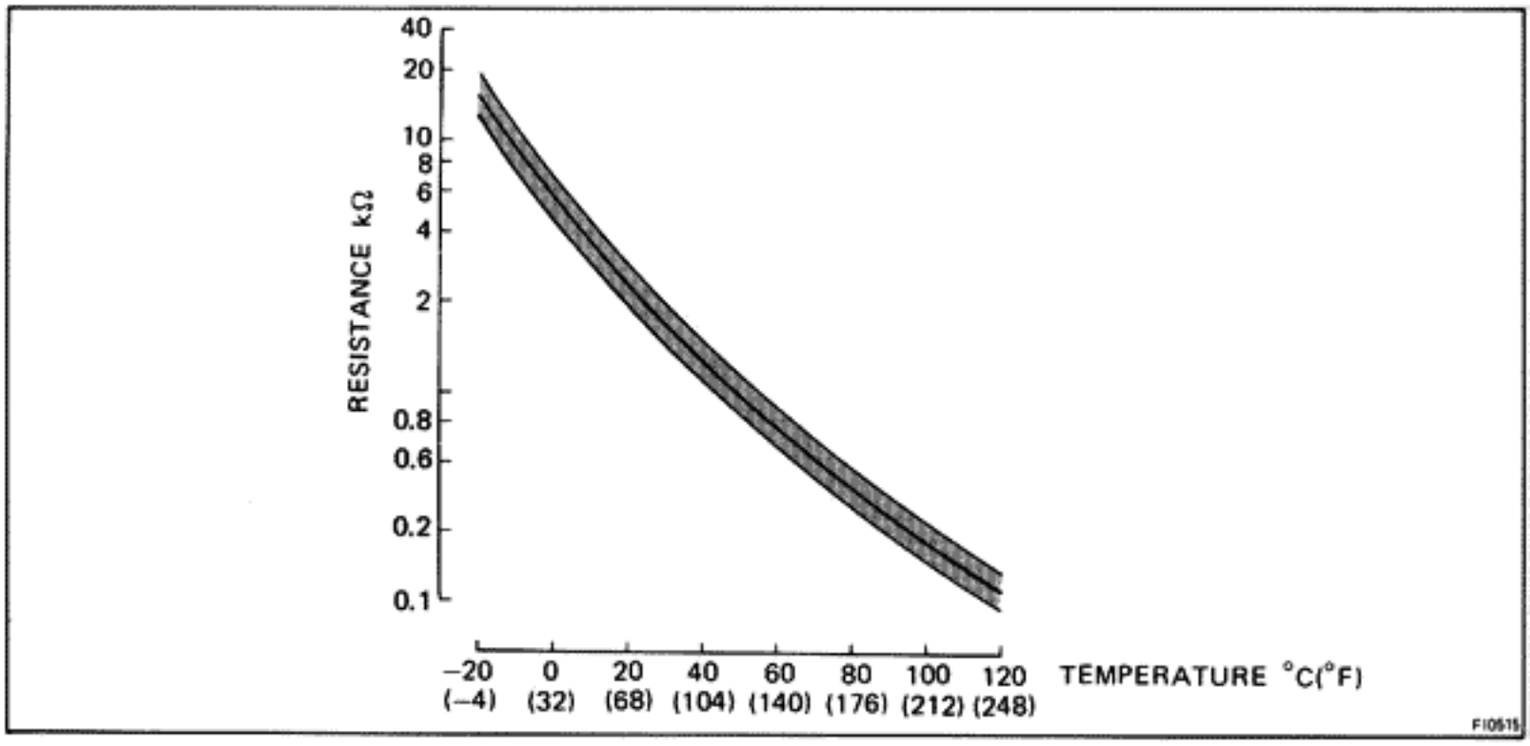

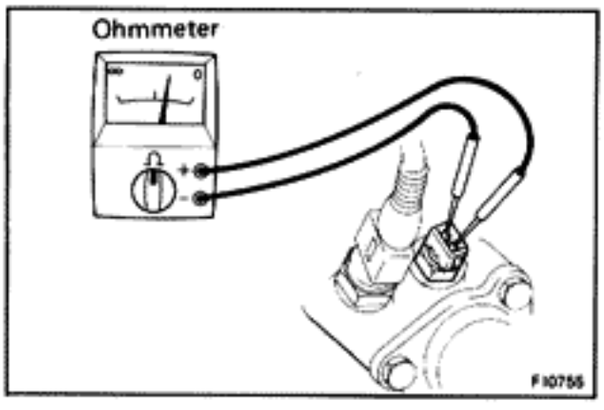

INSPECTION OF WATER TEMP. SENSOR

MEASURE RESISTANCE OF WATER TEMP. SENSOR

(a) Disconnect the connector.

(b) Using an ohmmeter, measure the resistance between both terminals.

Resistance: Refer to chart.

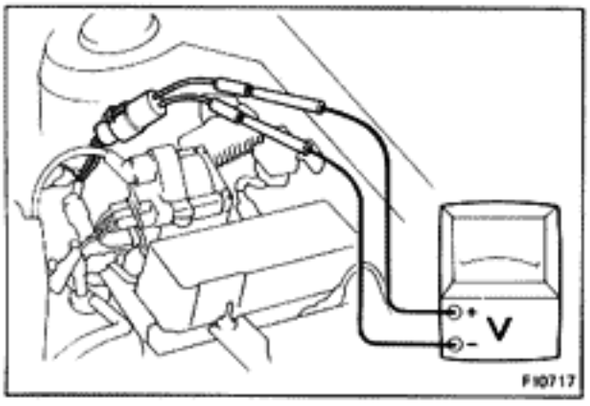

Oxygen Sensor

INSPECTION OF FEEDBACK VOLTAGE (V_F)

1. Warm up the engine.
2. Connect SST to the engine service connector.
   SST 09842-14010
3. Connect the voltmeter to the SST.
4. Warm up the Oxygen sensor with the engine at 2,500 rpm for about 2 minutes.

Warm up the Oxygen sensor with the engine at 2,500 rpm for approx. 90 seconds.

Short terminals T and E_1 of the service connector. And maintain engine speed at 2,500 rpm.

Check the number of times the voltmeter needle fluctuates in 10 seconds.

- Less than 8 times
- 8 times or more
- Zero

Replace the ECU

After replacing the oxygen sensor

Normal

Warm up the Oxygen sensor with the engine at 2,500 rpm for approx. 90 seconds, and maintain engine at 2,500 rpm.

Check the number of times the voltmeter needle fluctuates in 10 seconds.

- 8 times or more
- Zero
- Less than 8 times

Unshort terminals T and E_1 of the service connector. And maintain engine speed at 2,500 rpm.

Measure voltage between terminals V_F and E_1.

- 0V
- More than 0V

Read and record diagnostic codes

- Normal code and code 21
- Malfunction code(s) (ex. code 21)

Repair the relevent diagnostic code.

① ② ③ ④

CONTINUED ON PAGE FI-74

CONTINUED FROM PAGE FI-73

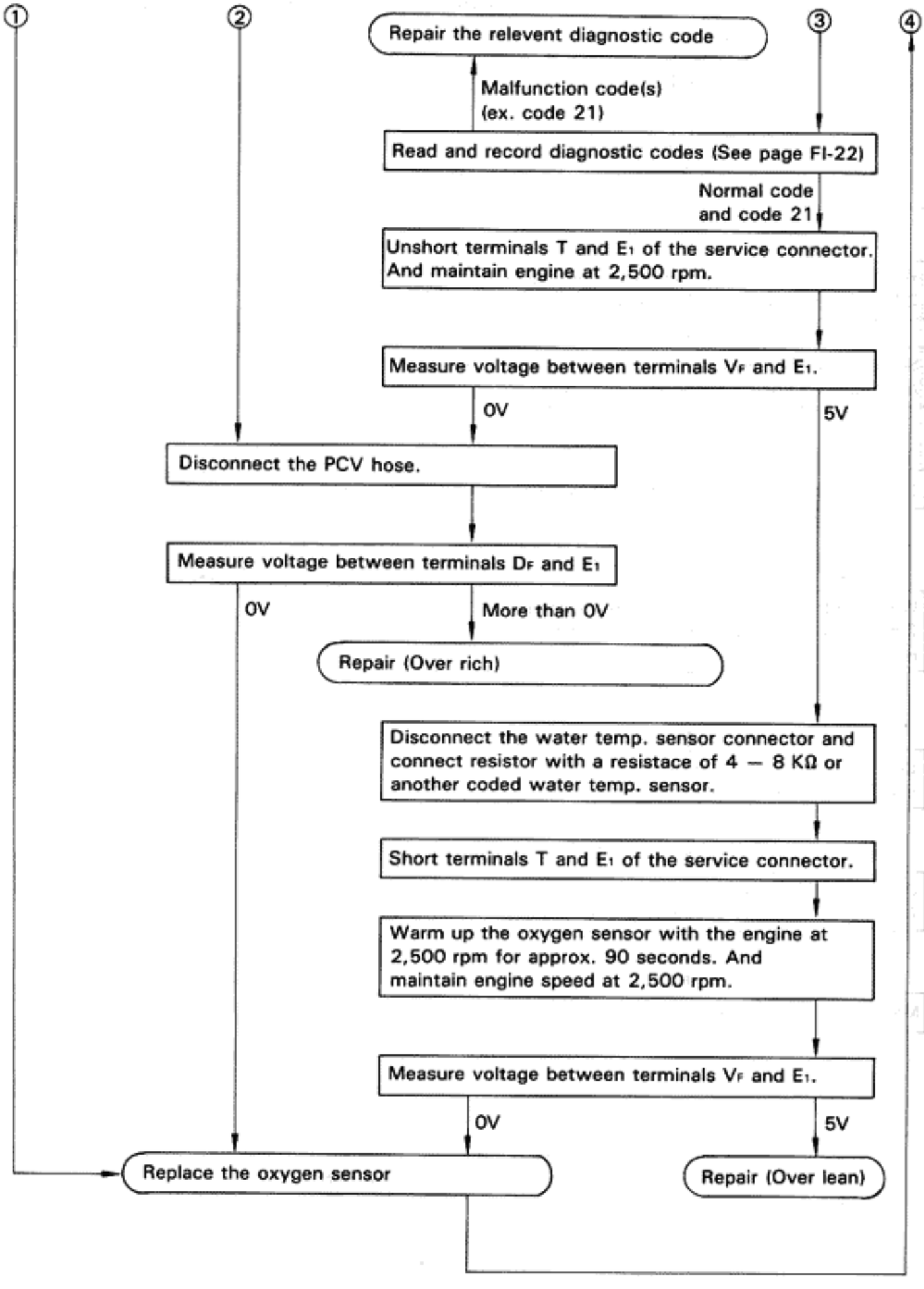

Electronic Controlled Unit (ECU)

INSPECTION OF ECU

1. MEASURE VOLTAGE OF ECU

NOTE: The EFI circuit can be checked by measuring the resistance and voltage at the wiring connectors of the ECU.

Check the voltages at the wiring connectors.

- Remove the glove box.
- Turn on the ignition switch.
- Measure the voltage at each terminal.

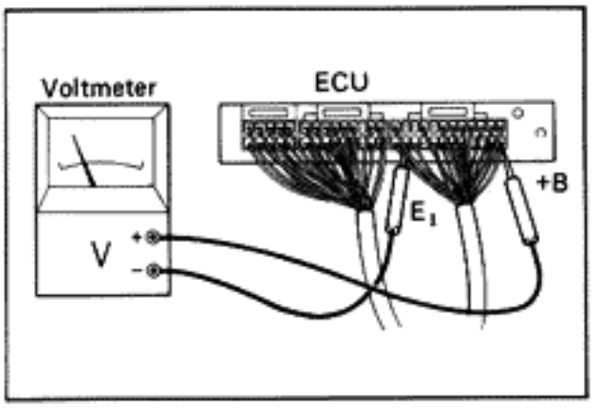

NOTE: 1. Perform all voltage measurements with the connectors connected.
2. Verify that the battery voltage is 11V or above when the ignition switch is ON.

Connectors of ECU

Symbol	Terminal Name	Symbol	Terminal Name	Symbol	Terminal Name
E_{01}	ENGINE GROUND	G⊖	ENGINE REVOLUTION SENSOR	A/C	A/C MAGNET SWITCH
E_{02}	ENGINE GROUND	V_F	CHECK CONNECTOR	SPD	SPEEDOMETER
No. 10	INJECTOR	G	ENGINE REVOLUTION SENSOR	W	WARNING LIGHT
No. 20	INJECTOR	T	CHECK CONNECTOR	THA	AIR TEMP. SENSOR
STA	STARTER SWITCH	VTA	THROTTLE SWITCH	V_S	AIR FLOW METER
IGt	IGNITER	Ne	ENGINE REVOLUTION SENSOR	V_C	AIR FLOW METER
EGR	EGR VSV	IDL	THROTTLE SWITCH	BAT	BATTERY +B
E_1	ENGINE GROUND	KNK	KNOCK SENSOR	IG S/W	IGNITION SWITCH
N/C	NEUTRAL START SWITCH (A/T)	IGf	IGNITER	+B	MAIN RELAY
	CLUTCH SWITCH (M/T)	Ox	OXYGEN SENSOR	TCD	ECT COMPUTER
ISC_1	ISC MOTOR NO. 1 COIL	THW	WATER TEMP. SENSOR	OIL	OIL PRESSURE SWITCH
ISC_2	ISC MOTOR NO. 2 COIL	E_2	SENSOR EARTH	L_1	ECT COMPUTER
ISC_3	ISC MOTOR NO. 3 COIL	E_1	ENGINE GROUND	L_2	ECT COMPUTER
ISC_4	ISC MOTOR NO. 4 COIL	M-REL	MAIN RELAY COIL	L_3	ECT COMPUTER

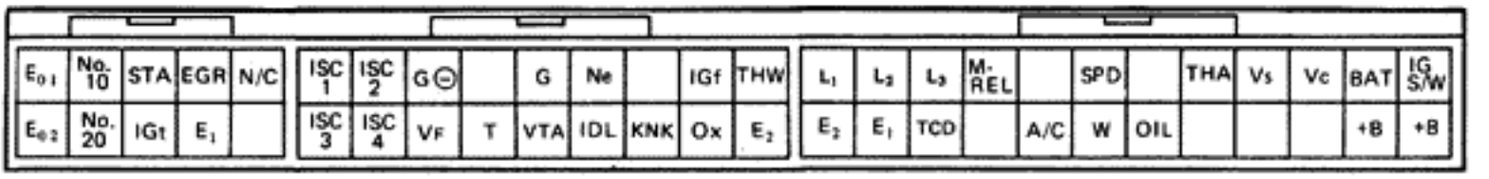

F10538

Terminals	STD Voltage	Condition	
BAT — E_1	10 — 14	—	
+B — E_1		IG S/W ON	—
IG S/W — E_1			
M-REL — E_1			
IDL — E_2	4 — 6	IG S/W ON	Throttle valve open
VTA — E_2	0.1 — 1.0		Throttle valve fully closed
	4 — 5		Throttle valve fully opened
V_C — E_2	4 — 6		—
V_S — E_2	4 — 5		Measuring plate fully closed
	0.02 — 0.08		Measuring plate fully open
	2 — 4	Idling	
	0.3 — 1.0	3,000 rpm	
THA — E_2	1 — 2	IG S/W ON	Intake air temperature 20°C (68°F)
THW — E_1	0.1 — 0.5		Coolant temperature 80°C (176°F)
STA — E_1	6 — 12	IG S/W ST position	
No. 10 / No. 20 — E_1	9 — 14	IG S/W ON	—
IGt — E_1	0.7 — 1.0	Cranking or Idling	
ISC_1 ∫ ISC_4 — E_1	9 — 14	IG S/W ON	—
	9 — 14	2 — 3 secs, after engine off	
+B — EGR	10 — 13	IG S/W ON	—
	0	Start engine and warm up oxygen sensor	
N/C — E_1	0	IG S/W ON	Shift position P or N range (for A/T)
	10 — 14		Ex. P or N range (for A/T)
	0		Clutch pedal not depressed (for M/T)
	10 — 14		Clutch pedal depressed (for M/T)
	9 — 11	Cranking	
T — E_1	4 — 6	IG S/W ON	Check connector not short
	0		Check connector short

OIL — E_1	4 — 6	IG S/W ON (Warning light on)	
	0	Start engine (Warning light out)	
A/C — E_1	10 — 13	IG S/W ON	A/C S/W ON
	0		A/C S/W OFF
V_F — E_1	0 — 5	Start engine (Throttle valve open)	
W — E_1	0	IG S/W ON	—
	10 — 13	Start engine	
TCD — E_1	2 — 3	IG S/W ON	Coolant temperature Less than 35°C (95°F)
	0		Coolant temperature 35 — 60°C (95 — 140°F)
	4 — 6		Coolant temperature More than 60°C (140°F)

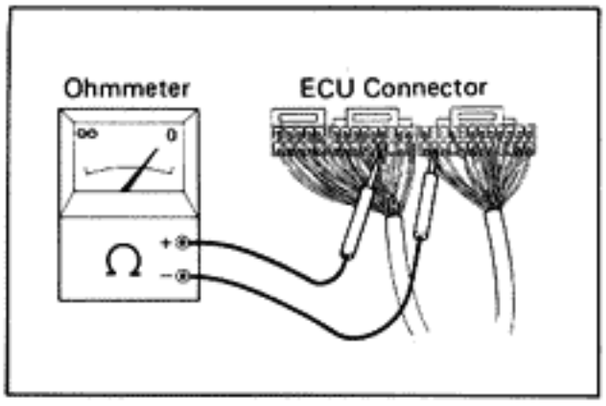

2. MEASURE RESISTANCE OF ECU

CAUTION:

1. **Do not touch the ECU terminals.**
2. **The tester probe should be inserted into wiring connector from wiring side.**

Check the resistance between each terminal of the wiring connector.

- Remove the glove box.
- Unplug the wiring connectors from the ECU.
- Measure the resistance between each terminal of the wiring connectors.

Resistances at ECU Wiring Connectors

Terminals	Condition	Resistance (Ω)
IDL — E_2	Throttle valve open	∞
	Throttle valve fully closed	0
VTA — E_2	Throttle valve fully opened	3,300 — 10,000
	Throttle valve fully closed	200 — 800
V_C — E_2	Disconnect air flow meter connector	3,000 — 7,000
	Disconnect throttle position sensor connector	200 — 400
V_S — E_2	Measuring plate fully closed	20 — 400
	Measuring plate fully open	20 — 1000
THA — E_2	Intake air temperature 20°C (68°F)	2,000 — 3,000
G — G⊖	—	140 — 180
Ne — G⊖	—	
ISC_1, ISC_2 ISC_3, ISC_4 — +B	—	10 — 30

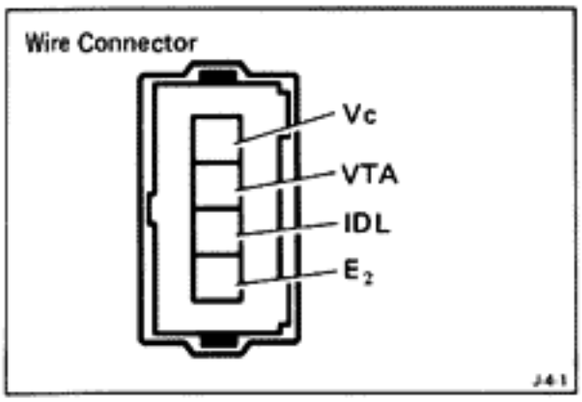

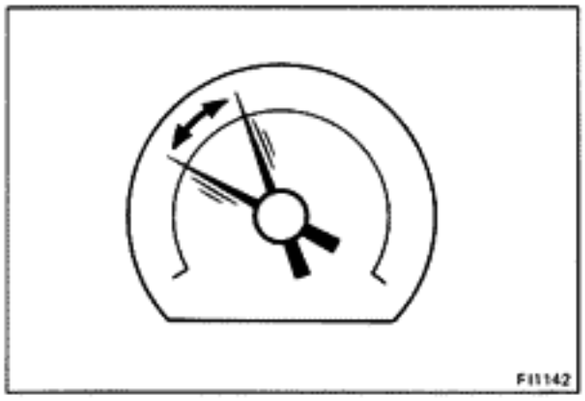

Fuel Cut RPM

INSPECTION OF FUEL CUT RPM

(a) Start and warm up the engine.

(b) Disconnect the throttle position sensor connector from the throttle position sensor.

(c) Short circuit terminals E_2 and IDL on wire connector side.

(d) Gradually raise the engine rpm and check that there is fluction between the fuel cut and fuel return points.

NOTE: The vehicle should be stopped.

Fuel Cut rpm	Fuel Return rpm
1,800 rpm	1,200 rpm

Start Injector Time Switch

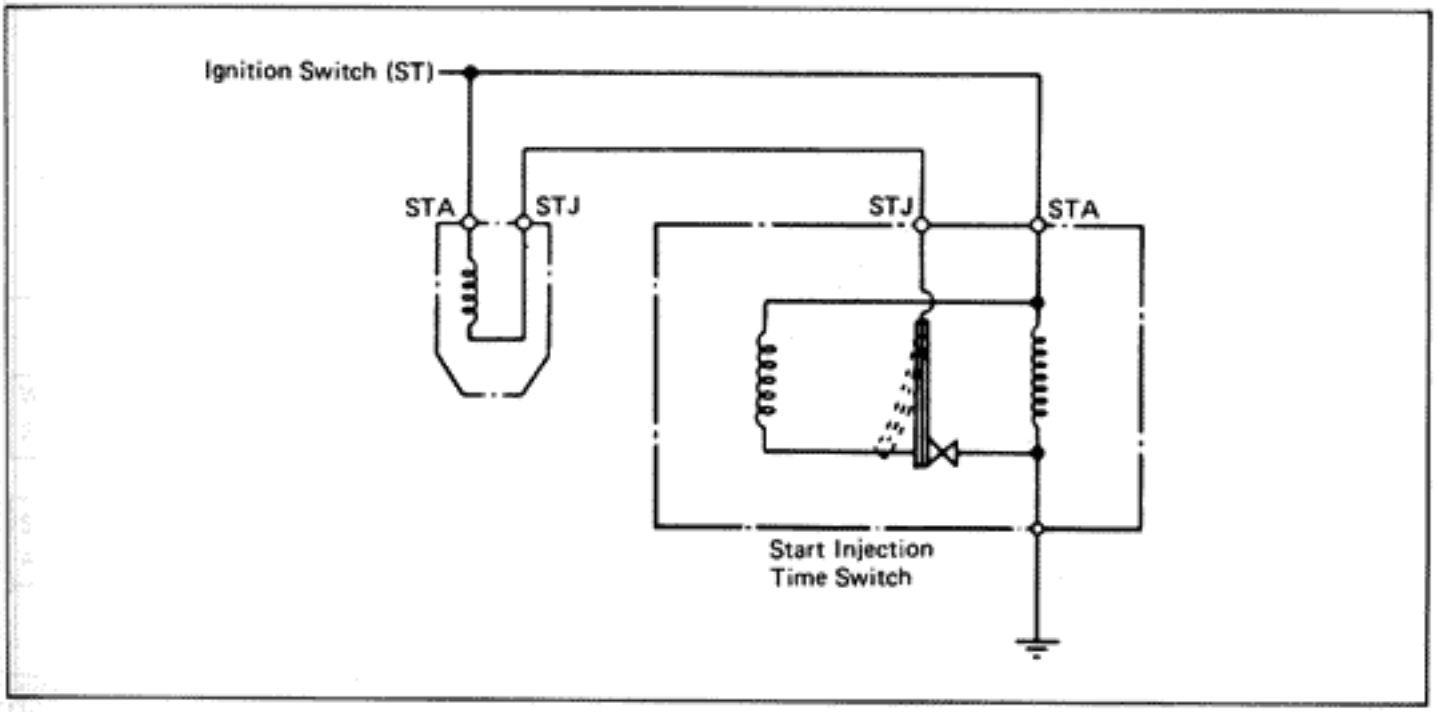

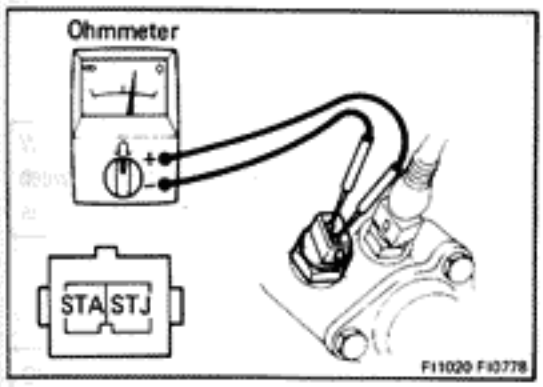

INSPECTION OF START INJECTOR TIME SWITCH

MEASURE RESISTANCE OF START INJECTOR TIME SWITCH

(a) Disconnect the connector.

(b) Using an ohmmeter, measure the resistance between each terminal.

Between terminals	Resistance (Ω)	Coolant temperature
STA — STJ	24 — 40	below 30°C (86°F)
	40 — 60	above 40°C (104°F)
STA — Ground	20 — 80	—

COOLING SYSTEM

	Page
TROUBLESHOOTING	CO-2
CHECK AND REPLACE ENGINE COOLANT	CO-2
WATER PUMP	CO-3
THERMOSTAT	CO-6
RADIATOR	CO-7

TROUBLESHOOTING

Problem	Possible cause	Remedy	Page
Engine overheats	Fan belts loose or missing	Adjust or replace belts	CH-4
	Dirt, leaves or insects on radiator or condenser	Clean radiator or condenser	
	Hoses, water pump, thermostat housing, radiator, heater, core plugs or head gasket leakage	Repair as necessary	
	Thermostat faulty	Check thermostat	CO-6
	Ignition timing retarded	Set timing	IG-10
	Fluid coupling faulty	Replace fluid coupling	CO-3
	Radiator hose plugged or rotted	Replace hose	
	Water pump faulty	Replace water pump	CO-3
	Radiator plugged or cap faulty	Check radiator	CO-7
	Cylinder head or block cracked or plugged	Repair as necessary	

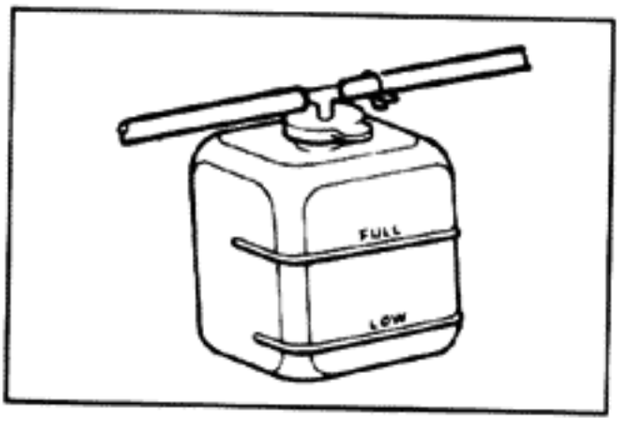

CHECK AND REPLACE ENGINE COOLANT

1. CHECK COOLANT LEVEL

The coolant level should be between the LOW and FULL lines. If low check for leakage and add coolant up to the FULL line.

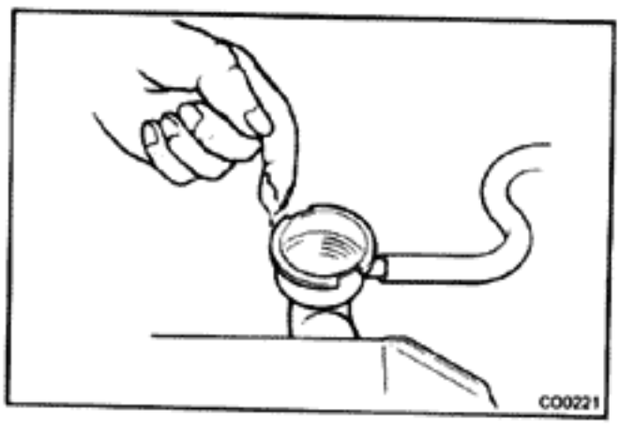

2. CHECK COOLANT QUALITY

There should not be any excessive deposits of rust or scales around the radiator cap or radiator filler hole, and the coolant should also be free from oil. Replace the coolant if excessively dirty.

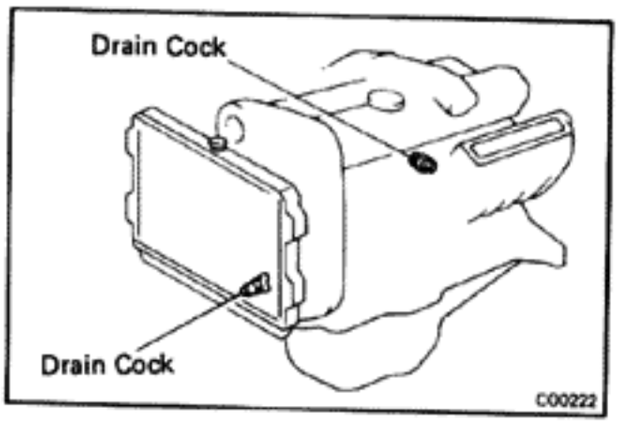

3. REPLACE ENGINE COOLANT

(a) Drain the coolant from radiator and engine drain cocks. (Engine drain is at right rear of engine block.)

(b) Close the drain cocks.

(c) Fill system with coolant.

Use a good brand of ethylene-glycol base coolant, mixed according to the maker's directions.

WATER PUMP

COMPONENTS

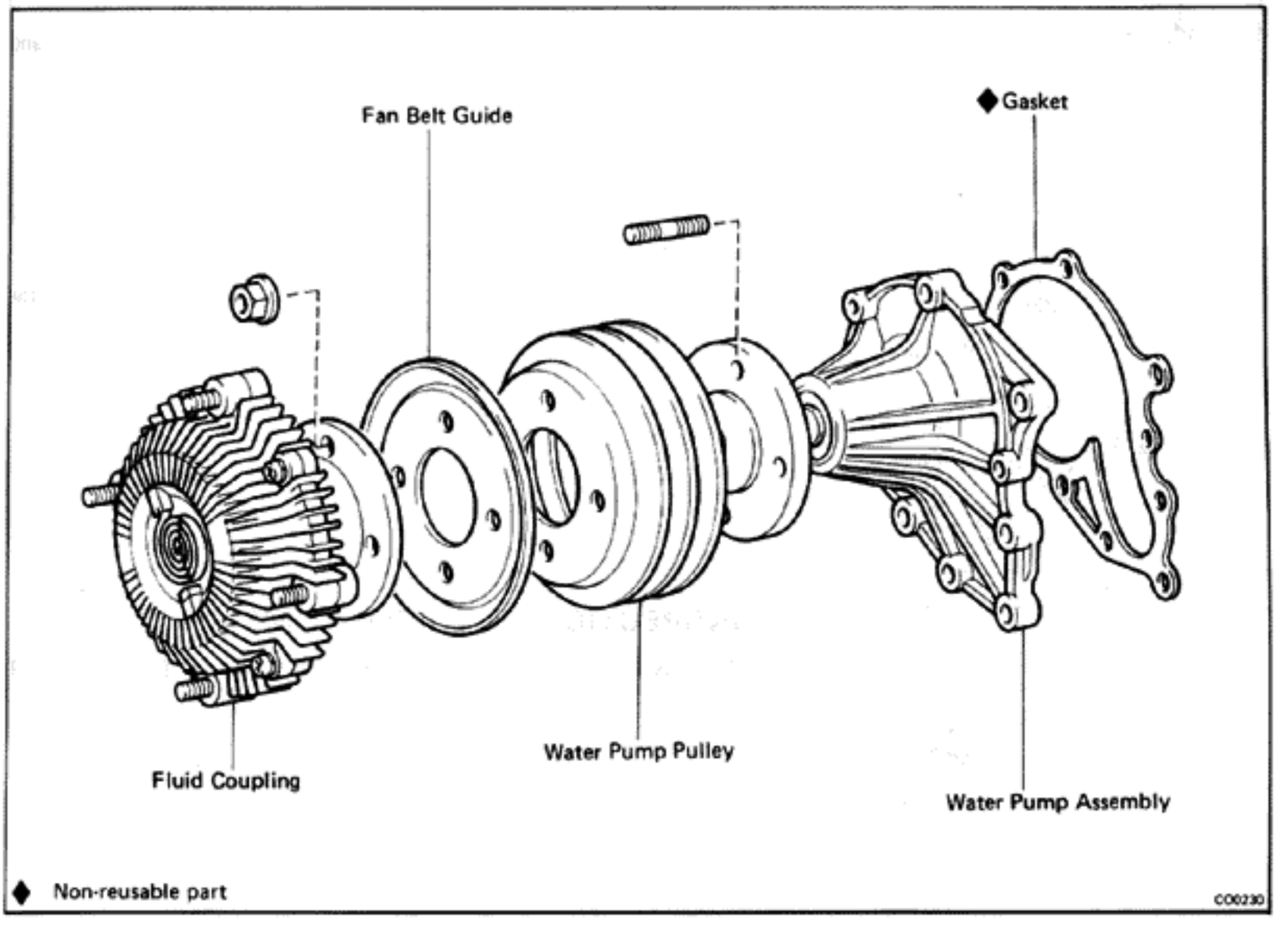

REMOVAL OF WATER PUMP

1. DRAIN COOLANT
2. LOOSEN FAN BELTS
   (a) Loosen the belt adjusting bolt, and nut of the PS pump and alternator.
   (b) Remove the alternator pivot nut and adjusting bar.
3. REMOVE AIR CLEANER CASE

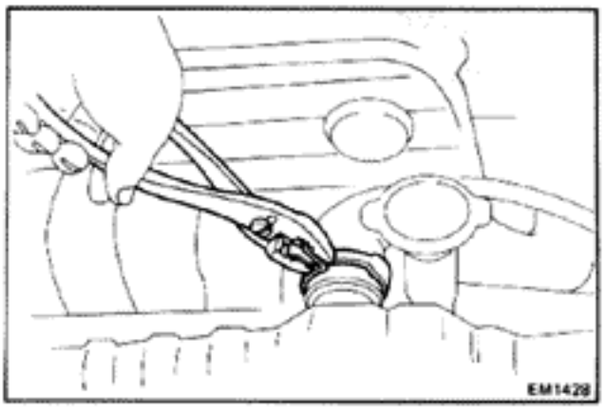

4. DISCONNECT UPPER RADIATOR HOSE
5. REMOVE FOUR FAN SHROUD BOLTS

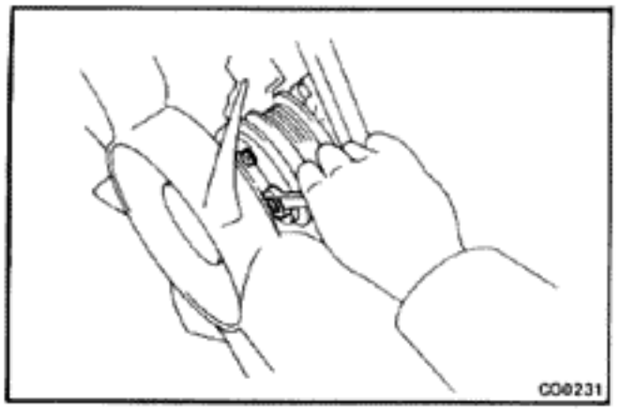

6. REMOVE FLUID COUPLING, FAN, FAN BELT GUIDE AND WATER PUMP PULLEY

(a) Remove the four nuts from the fluid coupling flange.

(b) Pull out the fluid coupling with the fan shroud.

(c) Remove the fan belt guide, water pump pulley and fan belts.

(d) Remove the fan from the fluid coupling.

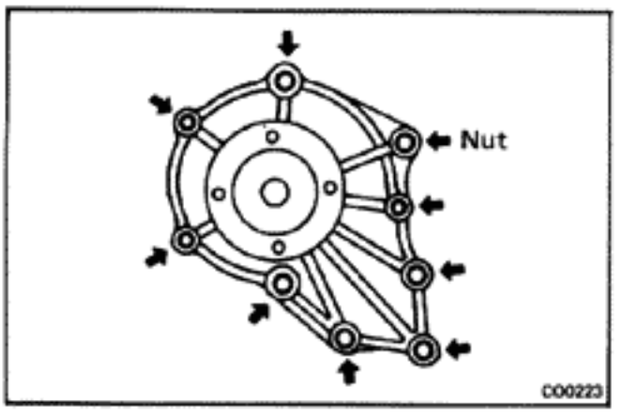

7. REMOVE WATER PUMP

Remove the eight bolts and one nut, and remove the water pump and gasket.

INSPECTION OF WATER PUMP

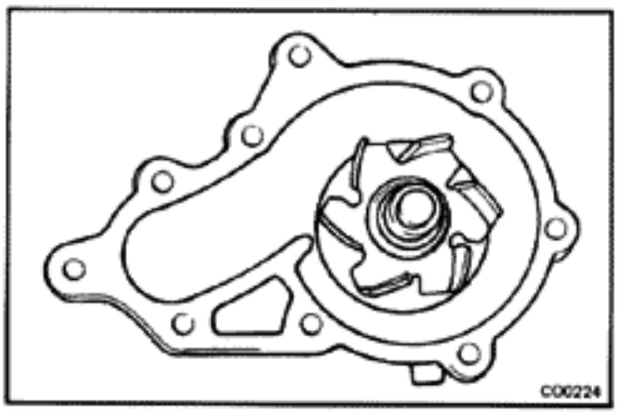

1. INSPECT WATER PUMP BODY AND TIMING BELT CASE

Check the water pump body and timing belt case for cracks and damaged gasket surfaces. Replace if necessary.

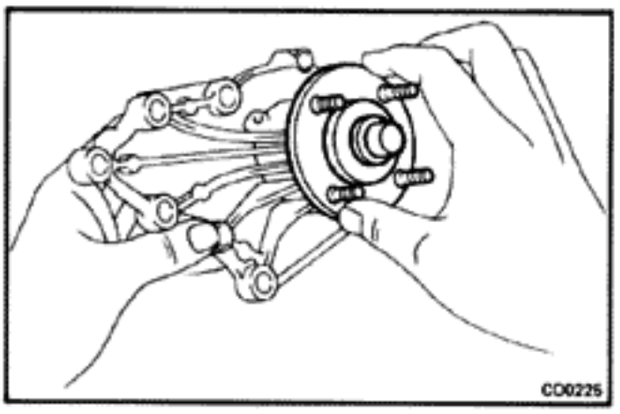

2. INSPECT WATER PUMP BEARING

Check that the water pump bearing operation is not rough or noisy.

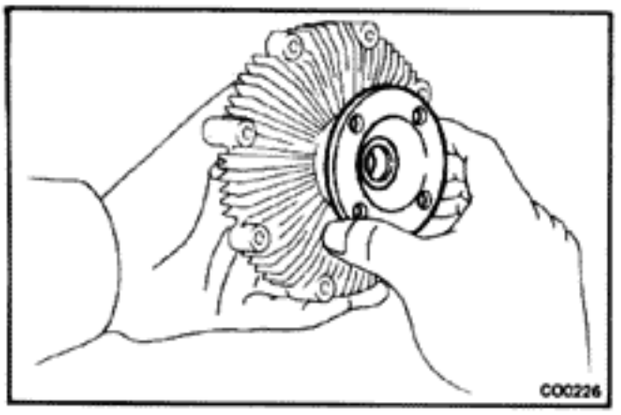

3. INSPECT FLUID COUPLING

Check the fluid coupling for damage and silicone oil leakage.

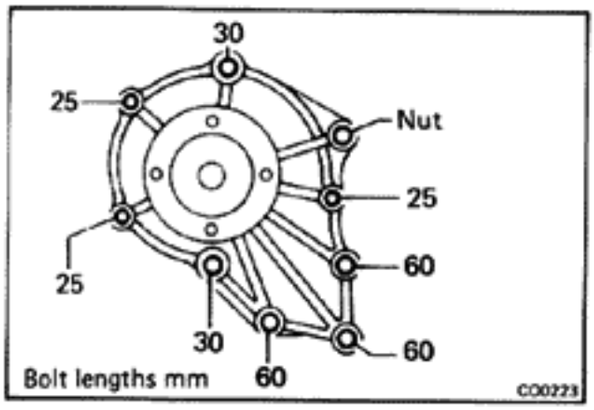

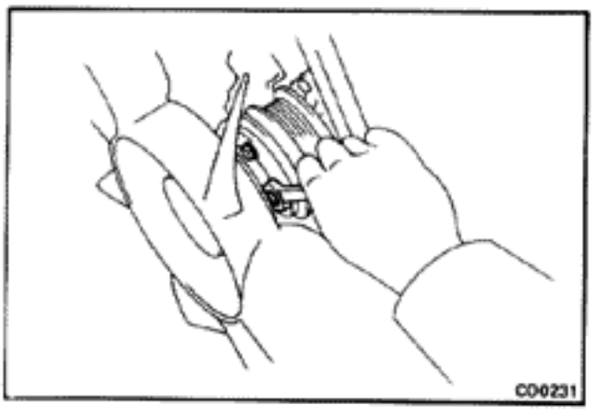

INSTALLATION OF WATER PUMP

(See page CO-3)

1. INSTALL WATER PUMP OVER NEW GASKET

   Install the water pump over a new gasket with eight bolts and one nut.

2. INSTALL FAN BELTS, FAN BELT GUIDE AND PULLEY

   (a) Check the fan belts for cracks or damage.

   (b) Place fan belts on the pulley, and position the pulley and fan belt guide on the bolts of the water pump.

3. INSTALL FAN ON FLUID COUPLING

4. INSTALL FLUID COUPLING AND FAN SHROUD

   (a) Install the fan shroud together with the fluid coupling to the engine compartment.

   (b) Install the fluid coupling on the pulley with four nuts.

   (c) Install the four fan shroud bolts.

5. INSTALL ALTERNATOR ADJUSTING BAR

6. ADJUST FAN BELT TENSION

   (See page MA-4)

7. CONNECT UPPER RADIATOR HOSE

8. INSTALL AIR CLEANER CASE

9. FILL WITH COOLANT

10. START ENGINE AND CHECK FOR LEAKS

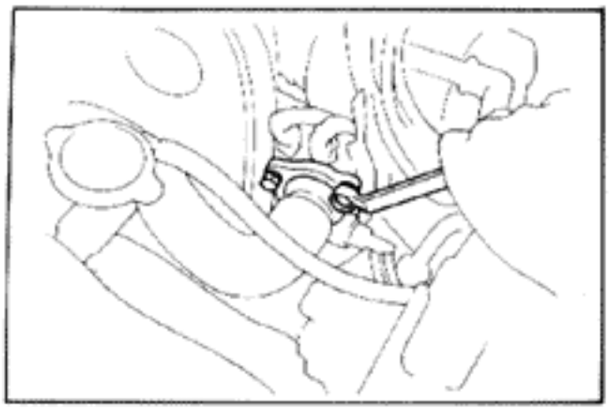

THERMOSTAT

REMOVAL OF THERMOSTAT

1. DRAIN COOLANT
2. REMOVE WATER OUTLET

   Remove the three bolts and the water outlet from the water outlet housing.
3. REMOVE THERMOSTAT AND GASKET

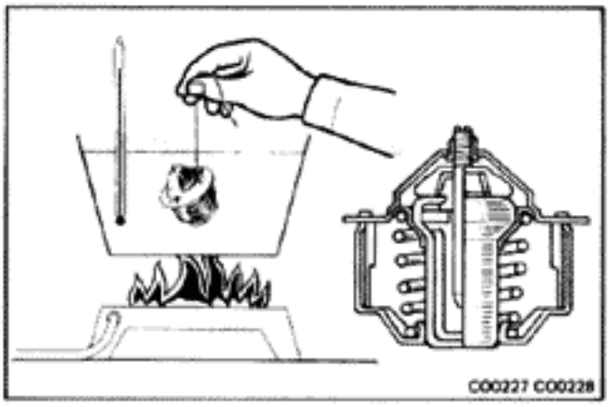

INSPECTION OF THERMOSTAT

NOTE: The thermostat is numbered according to the valve opening temperature.

(a) Immerse the thermostat in water and heat the water gradually.

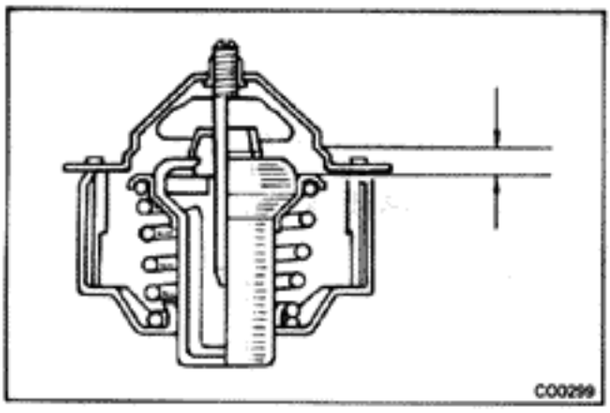

(b) Check the valve opening temperature and valve lift. If the valve opening temperature and valve lift are not within the following specifications, replace the thermostat.

Valve opening temperature:
86 – 90°C (187 – 194°F)

Valve lift:
More than 8 mm (0.31 in.) at 100°C (212°F)

(c) Check that valve spring is tight when the thermostat is fully closed. Replace if necessary.

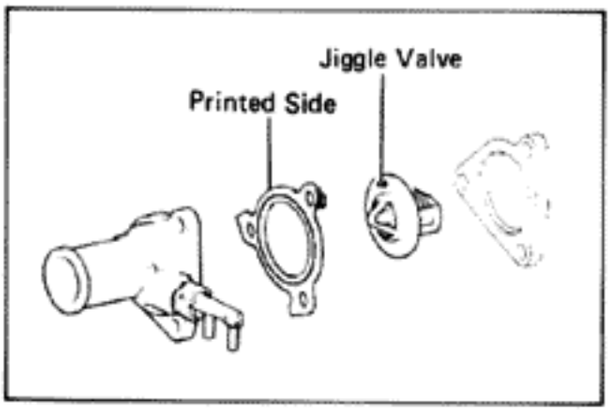

INSTALLATION OF THERMOSTAT

1. PLACE THERMOSTAT IN WATER OUTLET HOUSING

   Install the thermostat with the jiggle valve upward.
2. INSTALL WATER OUTLET

   Install the water outlet, facing the printed side of gasket forward.
3. FILL WITH COOLANT
4. START ENGINE AND CHECK FOR LEAKS

RADIATOR

CLEANING OF RADIATOR

Using water or steam cleaner, remove mud and dirt from the radiator core.

CAUTION: If using high-pressure type cleaner, be careful not to deform the fins of the radiator core. Keep a distance more than 40 – 50 cm (15.75 – 19.69 in.) between the radiator core and cleaner nozzle when the cleaner nozzle pressure is 30 – 35 kg/cm² (427 – 498 psi, 2,942 – 3,432 kPa).

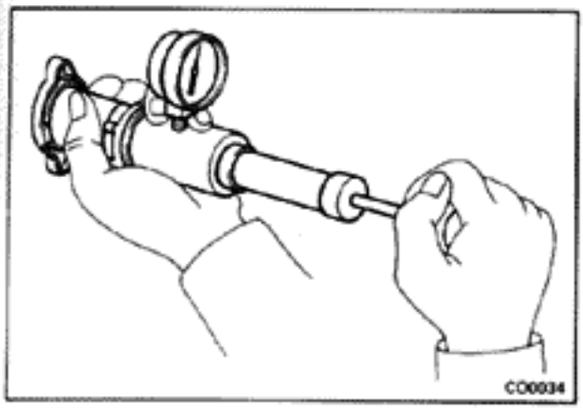

INSPECTION OF RADIATOR

1. CHECK RADIATOR CAP

Using a pressure tester, pump the tester until the relief valve opens.
Check that valve opens between 0.75 kg/cm² (10.7 psi, 74 kPa) and 1.05 kg/cm² (15 psi, 103 kPa).
Check that the pressure gauge does not drop rapidly when pressure on cap goes below 0.6 kg/cm² (8.5 psi, 59 kPa).

If either check is not within limits, replace cap.

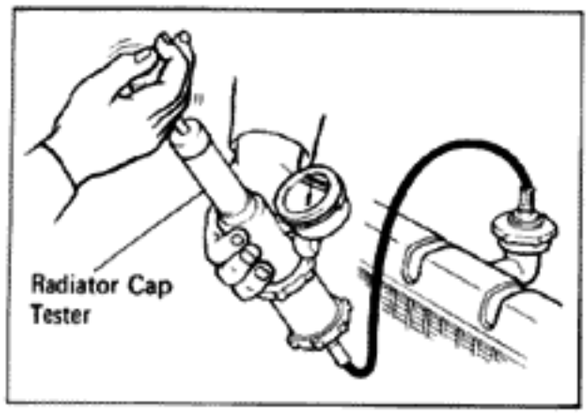

2. CHECK COOLING SYSTEM FOR LEAKS

(a) Fill the radiator with coolant and attach a pressure tester.

(b) Warm up the engine.

(c) Pump it to 1.2 kg/cm² (17.1 psi, 118 kPa), check that pressure does not drop.

If the pressure drops, check for leaks from hoses, radiator or water pump. If no external leaks are found, check the heater core, block and intake manifold.

LUBRICATION SYSTEM

	Page
TROUBLESHOOTING	LU-2
OIL PRESSURE CHECK	LU-2
REPLACEMENT OF ENGINE OIL AND OIL FILTER	LU-3
OIL PUMP	LU-4
OIL PRESSURE REGULATOR (For Lash Adjuster Valve)	LU-9

TROUBLESHOOTING

Problem	Possible cause	Remedy	Page
Oil leakage	Cylinder head cylinder block or oil pump body damaged or cracked	Replace as necessary	
	Oil seal faulty	Replace oil seal	LU-4
	Gasket faulty	Replace gasket	
Low oil pressure	Oil leakage	Replace as necessary	
	Relief valve faulty	Replace relief valve	LU-4
	Oil pump faulty	Replace oil pump	LU-4
	Engine oil poor quality	Replace engine oil	LU-3
	Crankshaft bearing faulty	Replace bearing	
	Connecting rod bearing faulty	Replace bearing	
High oil pressure	Oil filter clogged	Replace oil filter	LU-3
	Relief valve faulty	Replace relief valve	LU-4

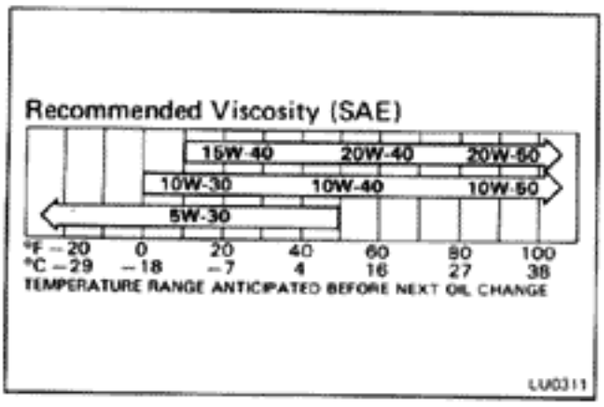

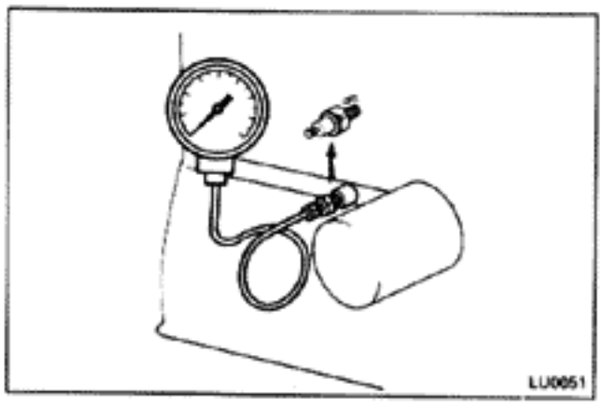

OIL PRESSURE CHECK

1. **CHECK OIL QUALITY**

   Check the oil for deterioration, entry of water, discoloring or thinning.

   If the quality is poor, change the oil.

   Use API grade SF or SF/CC multigrade, fuel-efficient and recommended viscosity oil.

2. **CHECK OIL LEVEL**

   The oil level should be between the L and F marks on the level gauge. If low, check for leakage and add oil up to the F mark.

3. **REMOVE OIL PRESSURE SWITCH OR SENDER GAUGE**

4. **INSTALL OIL PRESSURE GAUGE**

5. **START ENGINE**

   Start engine and warm it up to normal operating temperature.

6. **MEASURE OIL PRESSURE**

   Oil pressure:

   At idle speed More than 0.3 kg/cm² (4.3 psi, 29 kPa)

   At 3,000 rpm 2.5 — 5.0 kg/cm² (36 — 71 psi, 245 — 490 kPa)

   NOTE: Check for oil leakage after reinstalling the oil pressure switch or sender gauge.

REPLACEMENT OF ENGINE OIL AND OIL FILTER

1. DRAIN ENGINE OIL

Remove the oil drain plug and drain the oil into a container.

2. REPLACE OIL FILTER

(a) Using SST, remove the oil filter (located on right side of the engine block).

SST 09228-44010

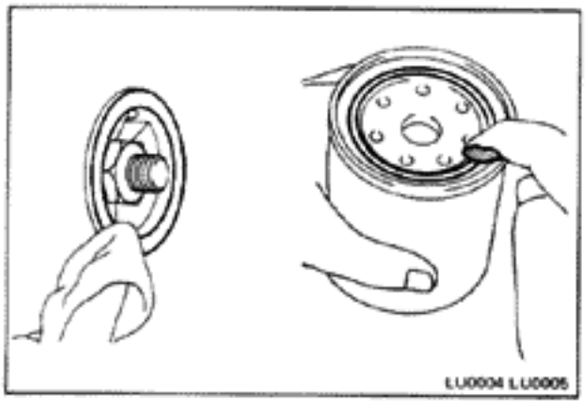

(b) Inspect and clean the oil filter installation surface.

(c) Apply clean engine oil to the gasket of the new oil filter.

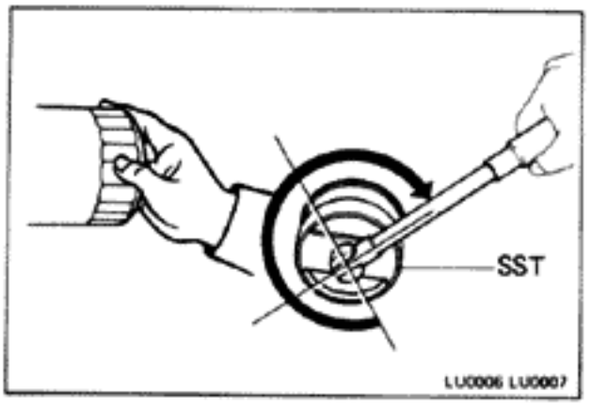

(d) Lightly screw in the oil filter to where you feel resistance.

(e) Then, using SST, tighten the oil filter an extra 3/4 turn.

SST 09228-44010

3. FILL WITH ENGINE OIL

(a) Clean and install the oil drain plug with a new gasket.

(b) Fill the engine with new oil API grade SF or SF/CC, multigrade, fuel efficient and recommended viscosity oil.

Oil capacity:

Dry fill	**5.7 liters (6.0 US qts, 5.0 Imp. qts)**
Drain and refill	
w/o Oil filter change	**4.6 liters (4.9 US qts, 4.0 Imp. qts)**
w/ Oil filter change	**5.1 liters (5.4 US qts, 4.5 Imp. qts)**

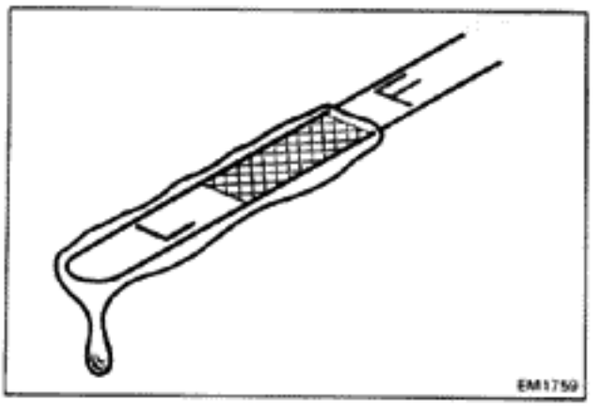

4. START ENGINE AND CHECK FOR LEAKS

5. RECHECK ENGINE OIL LEVEL

Recheck the engine oil level and refill as necessary.

NOTE: Insert the oil level gauge with the curved tip pointed toward the engine.

OIL PUMP

COMPONENTS

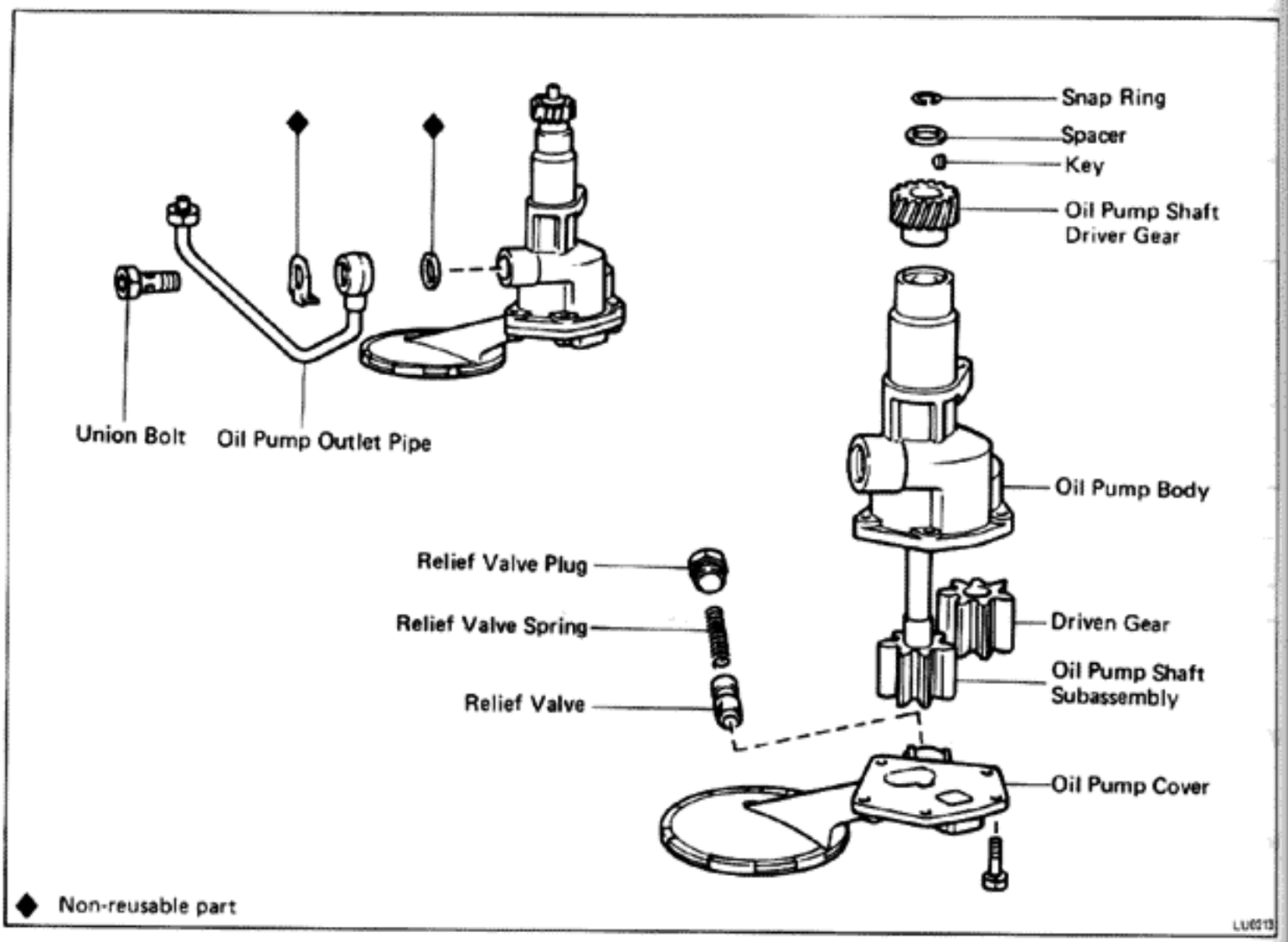

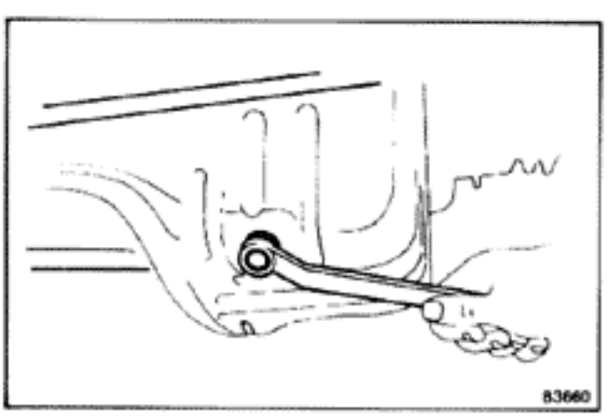

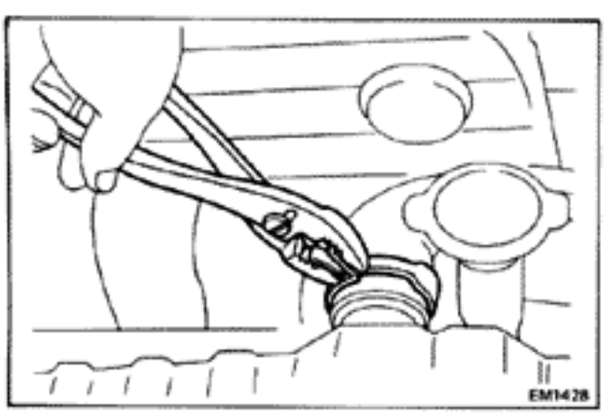

REMOVAL AND DISASSEMBLY OF OIL PUMP

1. **DRAIN ENGINE OIL**
2. **DRAIN COOLANT**
3. **REMOVE AIR CLEANER CASE**
4. **REMOVE AIR CONNECTOR PIPE WITH NO.1 AND NO.2 AIR CLEANER HOSES**
5. **REMOVE OIL LEVEL GAUGE**
6. **DISCONNECT UPPER RADIATOR HOSE**
7. **LOOSEN FAN BELTS**

   Loosen the belt adjusting bolts and nut of the PS pump and alternator.
8. **REMOVE FOUR FAN SHROUD BOLTS**

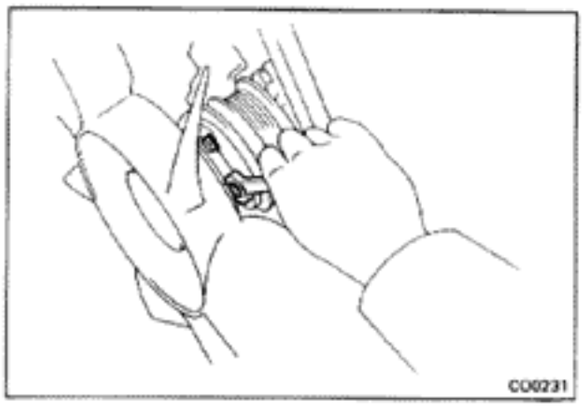

9. REMOVE FLUID COUPLING WITH FAN AND FAN SHROUD

(a) Remove the four nuts from the fluid coupling flange.

(b) Remove the fluid coupling with the fan shroud.

10. RAISE VEHICLE

CAUTION: Be sure the vehicle is securely supported.

11. REMOVE ENGINE UNDERCOVER

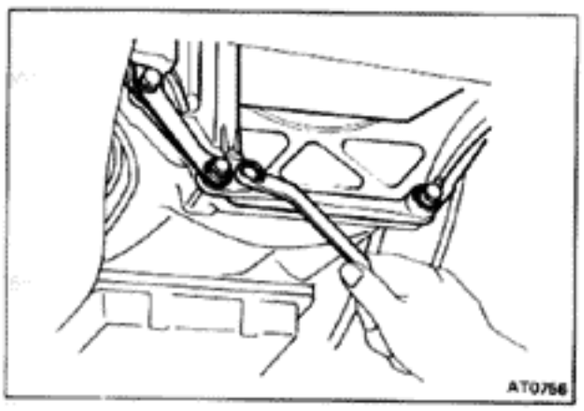

12. REMOVE EXHAUST PIPE CLAMP BOLT FROM PIPE STAY

13. REMOVE TWO STIFFENER PLATES

14. REMOVE FLYWHEEL HOUSING UNDERCOVER

15. REMOVE FOUR ENGINE MOUNT BOLTS

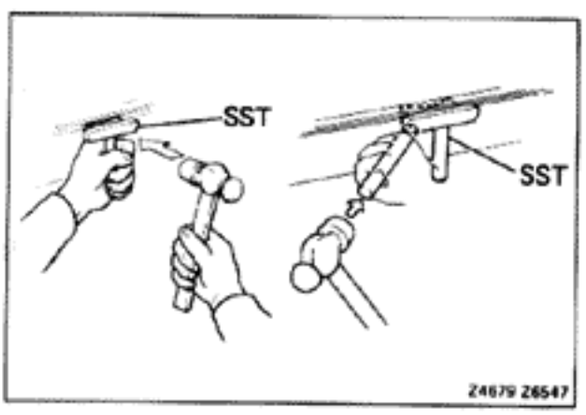

16. REMOVE OIL PAN

(a) Remove the twenty six bolts, and remove the oil pan.

(b) Using SST and a brass bar, separate the oil pan from the cylinder block.

SST 09032-00100

NOTE: When removing the oil pan, be careful not to damage the oil pan flange.

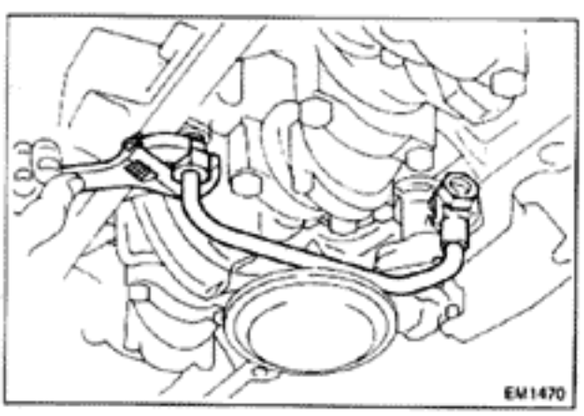

17. REMOVE OIL PUMP ASSEMBLY

(a) Remove the union bolt and nut and disconnect the oil pump outlet pipe.

(b) Remove the oil pump mounting bolt and remove the oil pump.

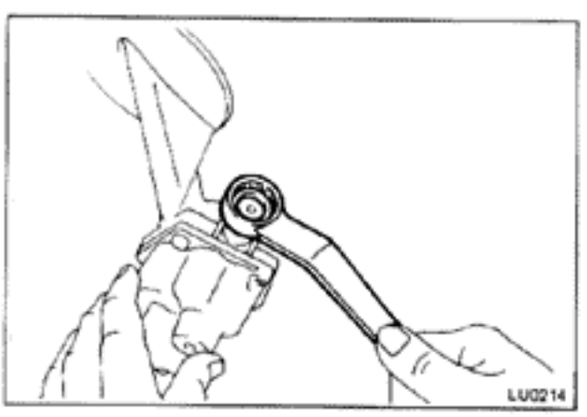

18. DISASSEMBLE OIL PUMP ASSEMBLY

(a) Unscrew the relief valve plug, and remove spring and relief valve.

(b) Remove the five bolts, and remove oil pump cover and driven gear.

(c) Remove the snap ring, spacer, drive shaft gear, key and shaft subassembly.

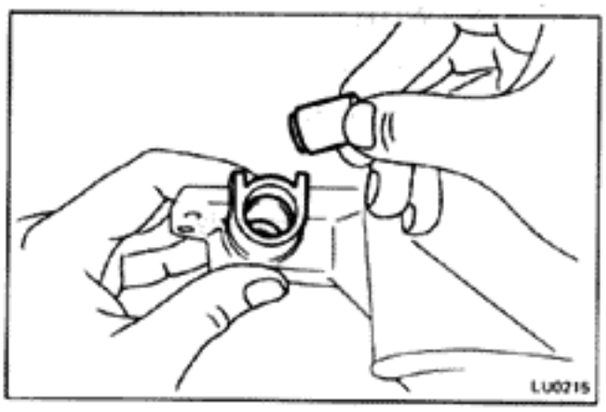

INSPECTION OF OIL PUMP

1. INSPECT RELIEF VALVE

Check the relief valve for scoring or wear.

If damaged, replace the valve or pump assembly.

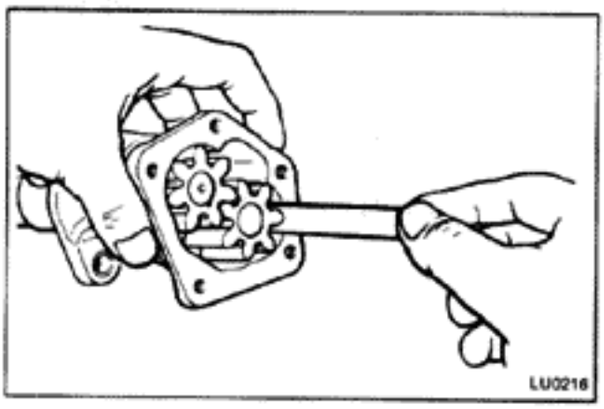

2. MEASURE BODY CLEARANCE

Using a feeler gauge, measure the clearance between the driven gear and body.

Standard clearance: **0.03 — 0.06 mm (0.0012 — 0.0024 in.)**

Maximum clearance: **0.2 mm (0.008 in.)**

If the clearance is greater than maximum, replace the gear and/or body.

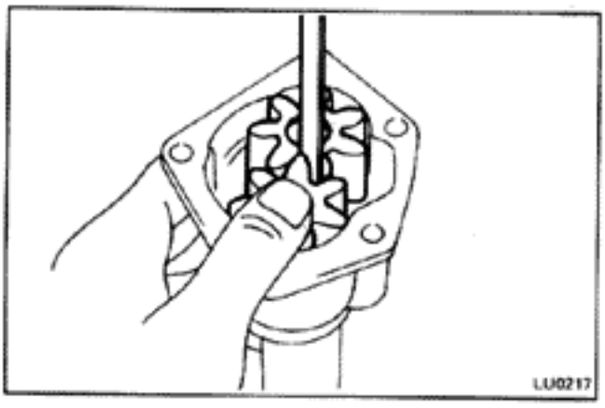

3. MEASURE GEAR BACKLASH

Using a feeler gauge, measure the backlash as shown.

Standard clearance: **0.5 — 0.6mm (0.020 — 0.024 in.)**

Maximum backlash: **0.9 mm (0.035 in.)**

If the blaklash is greater than maximum, replace the shaft subassembly and/or driven gear.

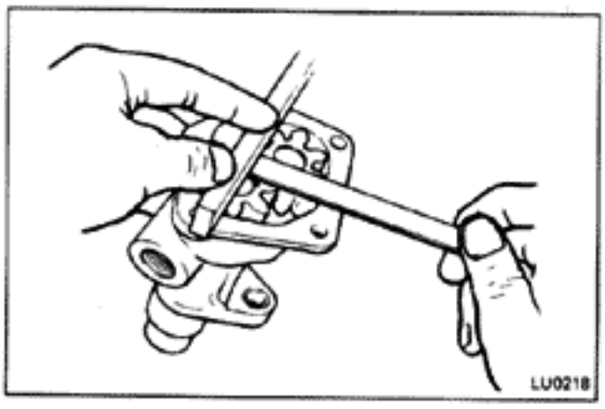

4. MEASURE SIDE CLEARANCE

Using a feeler gauge and flat block, measure the side clearance as shown.

Standard clearance: **0.03 — 0.09 mm (0.0012 — 0.0035 in.)**

Maximum clearance: **0.15 mm (0.0059 in.)**

If the clearance is greater than maximum, replace the gears and/or body.

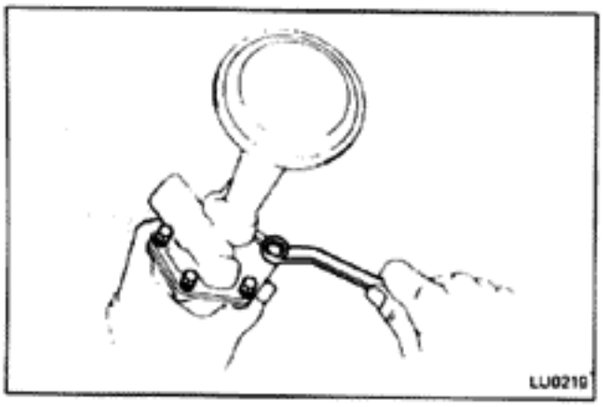

ASSEMBLY OF OIL PUMP

(See page LU-4)

ASSEMBLE OIL PUMP ASSEMBLY

(a) Install the shaft subassembly, key, drive shaft gear, spacer and snap ring.

(b) Install the driven gear and pump cover with five bolts.

(c) Install the relief valve and spring in the cover and screw on the relief valve plug.

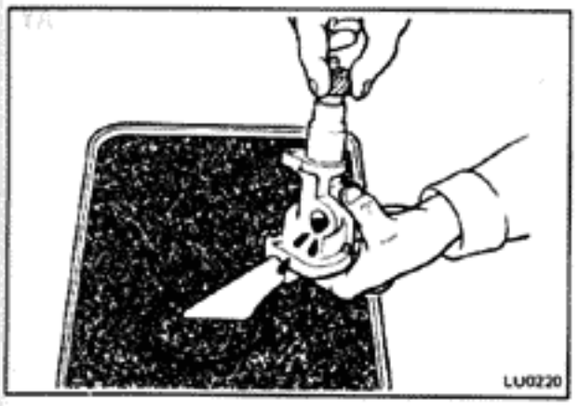

OPERATION CHECK OF OIL PUMP

CHECK PUMP OPERATION

(a) Immerse the suction end of the pump into clean engine oil and turn the shaft counterclockwise with your hand. Oil should come out of the discharge hole.

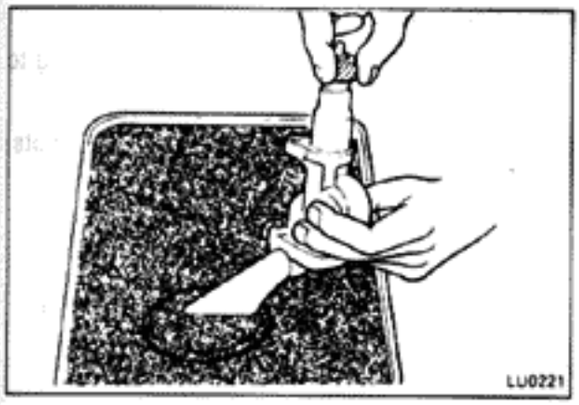

(b) Close the discharge hole with your thumb, and turn the shaft as before. The shaft should be difficult to turn.

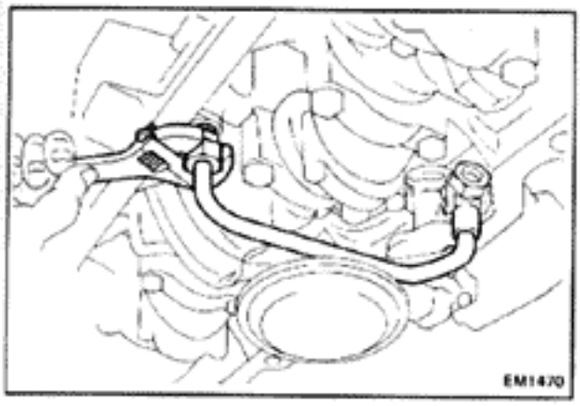

INSTALLATION OF OIL PUMP ASSEMBLY

1. INSTALL OIL PUMP ASSEMBLY

(a) Install the oil pump and mounting bolt.
Torque the bolt.

Torque: 220 kg-cm (16 ft-lb, 22 N·m)

(b) Install the oil pipe with gasket lock washer and union bolt. Tighten the oil pipe union bolt and nut.

Torque: 350 kg-cm (25 ft-lb, 34 N·m)

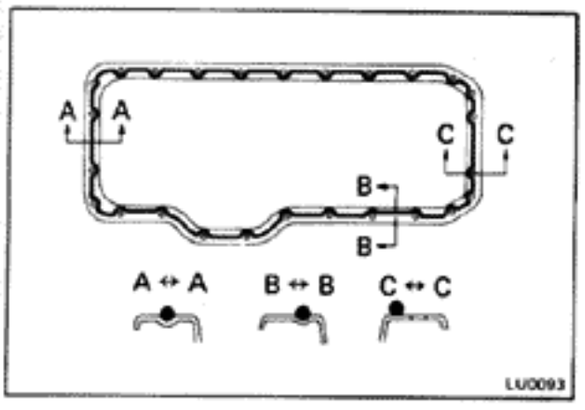

2. INSTALL OIL PAN

(a) Remove any packing material and be careful not to drop the oil on the contacting surfaces of the oil pan and cylinder block.

- Using a razor blade and gasket scraper, remove all the packing (FIPG) material from the gasket surfaces.
- Thoroughly clean all components to remove all the loose material.
- Clean both sealing surface with a non-residue solvent.

CAUTION: Do not use a solvent which will affect the painted surfaces.

(b) Apply seal packing to the cylinder block installing surface of the oil pan.

Seal packing: Part No. 08826-00080 or equivalent

(c) Install the oil pan over the studs on the block with the twenty four bolts and two nuts.
Torque the bolts and nuts.

Torque: 80 kg-cm (69 in.-lb, 7.8 N·m)

3. INSTALL FLYWHEEL HOUSING UNDER COVER

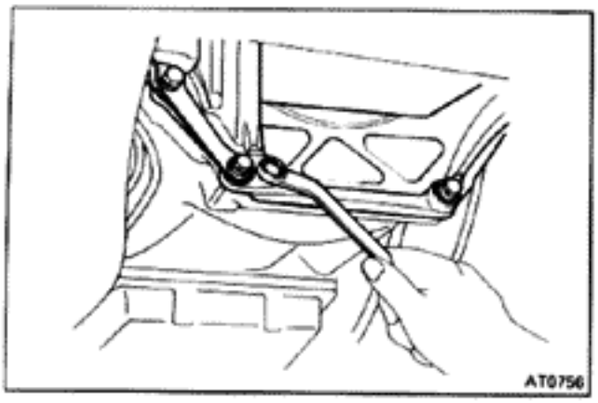

4. INSTALL EXHAUST PIPE CLAMP BOLT TO PIPE STAY
5. INSTALL TWO STIFFENER PLATES
6. INSTALL ENGINE UNDER COVER

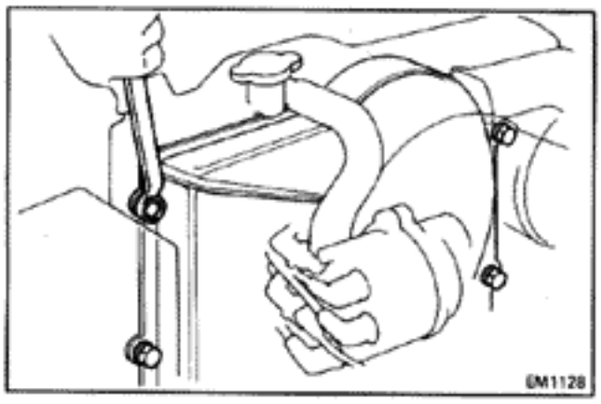

7. INSTALL FAN AND FAN SHROUD
   (a) Put on the fan shroud together the fluid coupling to the engine compartment.
   (b) Install the fluid coupling on the pulley with four nuts.
   (c) Install the four fan shroud bolts.
8. ADJUST FAN BELT TENSION
   (See page MA-4)
9. CONNECT UPPER RADIATOR HOSE
10. INSTALL AIR CONNECTOR PIPE WITH NO.1 AND NO.2 AIR CLEANER HOSES
11. INSTALL AIR CLEANER CASE
12. FILL WITH COOLANT
13. FILL WITH ENGINE OIL
14. START ENGINE AND CHECK FOR LEAKS

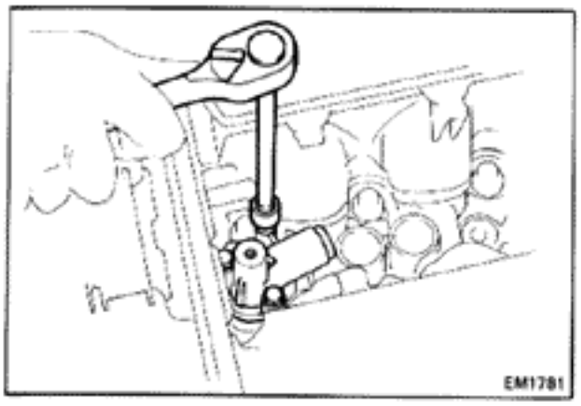

OIL PRESSURE REGULATOR
(For Lash Adjuster Valve)

REMOVAL AND DISASSEMBLY OF OIL PRESSURE REGULATOR

1. **REMOVE NO. 3 TIMING BELT COVER**
2. **REMOVE TIMING BELT COVER STAY**
3. **REMOVE OIL PRESSURE REGULATOR AND GASKET**
4. **DISASSEMBLE OIL PRESSURE REGULATOR ASSEMBLY**

   Unscrew the relief valve plug, and remove the spring and relief valve.

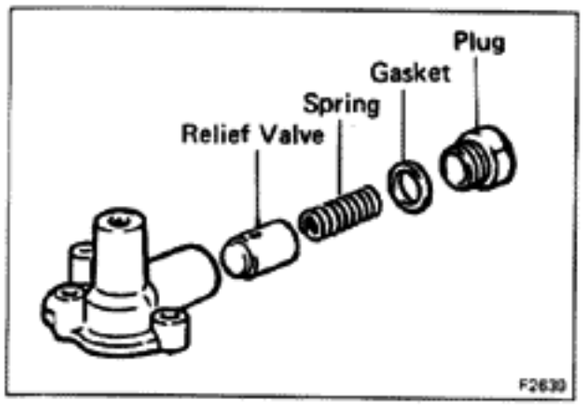

INSPECTION OF OIL PRESSURE REGULATOR

Check the relief valve for scoring or wear.
If damaged, replace the valve or regulator assembly.

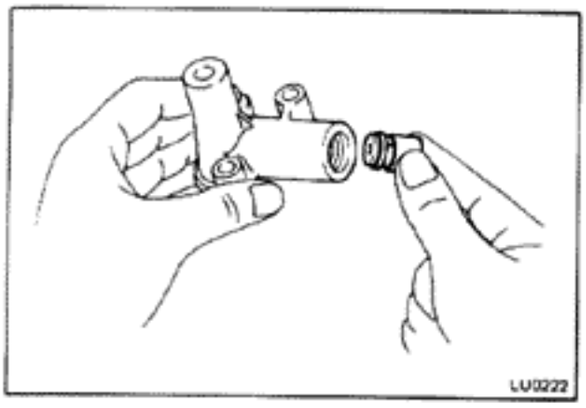

ASSEMBLY AND INSTALLATION OF OIL PRESSURE REGULATOR

1. **ASSEMBLE OIL PRESSURE REGULATOR ASSEMBLY**

   Install the relief valve and spring in the body, and screw on the relief valve plug.
2. **INSTALL OIL PRESSURE REGULATOR OVER NEW GASKET**
3. **INSTALL TIMING BELT COVER STAY**
4. **INSTALL NO. 3 TIMING BELT COVER**
5. **START ENGINE AND CHECK FOR LEAKS**

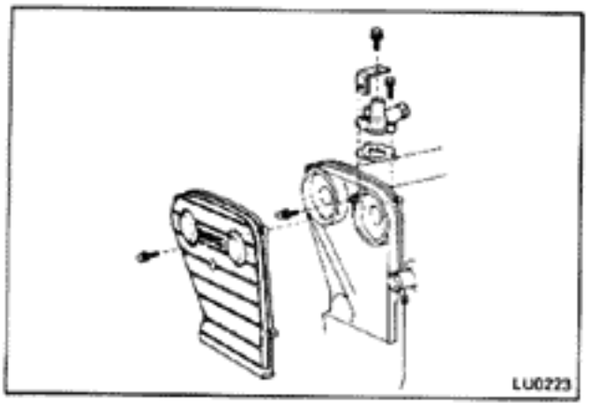

IGNITION SYSTEM

	Page
PRECAUTIONS	IG-2
TROUBLESHOOTING	IG-2
ELECTRONIC SPARK ADVANCE (ESA)	IG-3
ON-VEHICLE INSPECTION	IG-4
DISTRIBUTOR	IG-8

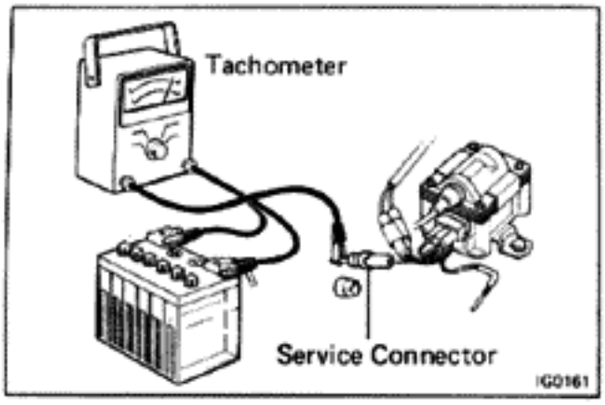

PRECAUTIONS

1. **Do not keep the ignition switch ON for more than 10 minutes if the engine will not start.**
2. **As some tachometers are not compatible with this ignition system, we recommended that you confirm the compatibility of your unit before using.**
3. **NEVER allow the ignition coil terminals to touch ground as it could result in damage to the igniter and/or ignition coil.**
4. **Do not disconnect the battery when the engine is running.**
5. **Make sure that the igniter is properly grounded to the body.**
6. **When a tachometer is connected to the system, connect the tachometer positive terminal to the service connector.**

TROUBLESHOOTING

Problem	Possible cause	Remedy	Page
Engine will not start/ Hard to start (cranks ok)	Ignition problems	Perform spark test	IG-4
	• Ignition coil	Inspect coil	IG-7
	• Igniter		
	• Distributor	Inspect distributor	IG-7
	Spark plugs faulty	Inspect plugs	IG-5
Rough idle or stalls	Spark plugs faulty	Inspect plugs	IG-5
	Incorrect ignition timing	Reset timing	IG-10
	Ignition problems	Perform spark test	IG-4
	• Ignition coil	Inspect coil	IG-7
	• Igniter		
	• Distributor	Inspect distributor	IG-7
Engine hesitates/ Poor acceleration	Spark plugs faulty	Inspect plugs	IG-4
	Incorrect ignition timing	Reset timing	IG-10
Muffler explosion (after fire) all the time	Incorrect ignition timing	Reset timing	IG-10
Engine backfires	Incorrect ignition timing	Reset timing	IG-10
Poor gasoline mileage	Spark plugs faulty	Inspect plugs	IG-5
	Incorrect ignition timing	Reset timing	IG-10
Engine overheats	Incorrect ignition timing	Reset timing	IG-10

ELECTRONIC SPARK ADVANCE (ESA)

The ECU is programmed with data for optimum ignition timing under any and all operating conditions. Using data provided by sensors which monitor various engine functions (rpm, intake air volume, eng. temperature, etc.) the microcomputer (ECU) triggers the spark at precisely the right instant.

ESA SYSTEM CIRCUIT

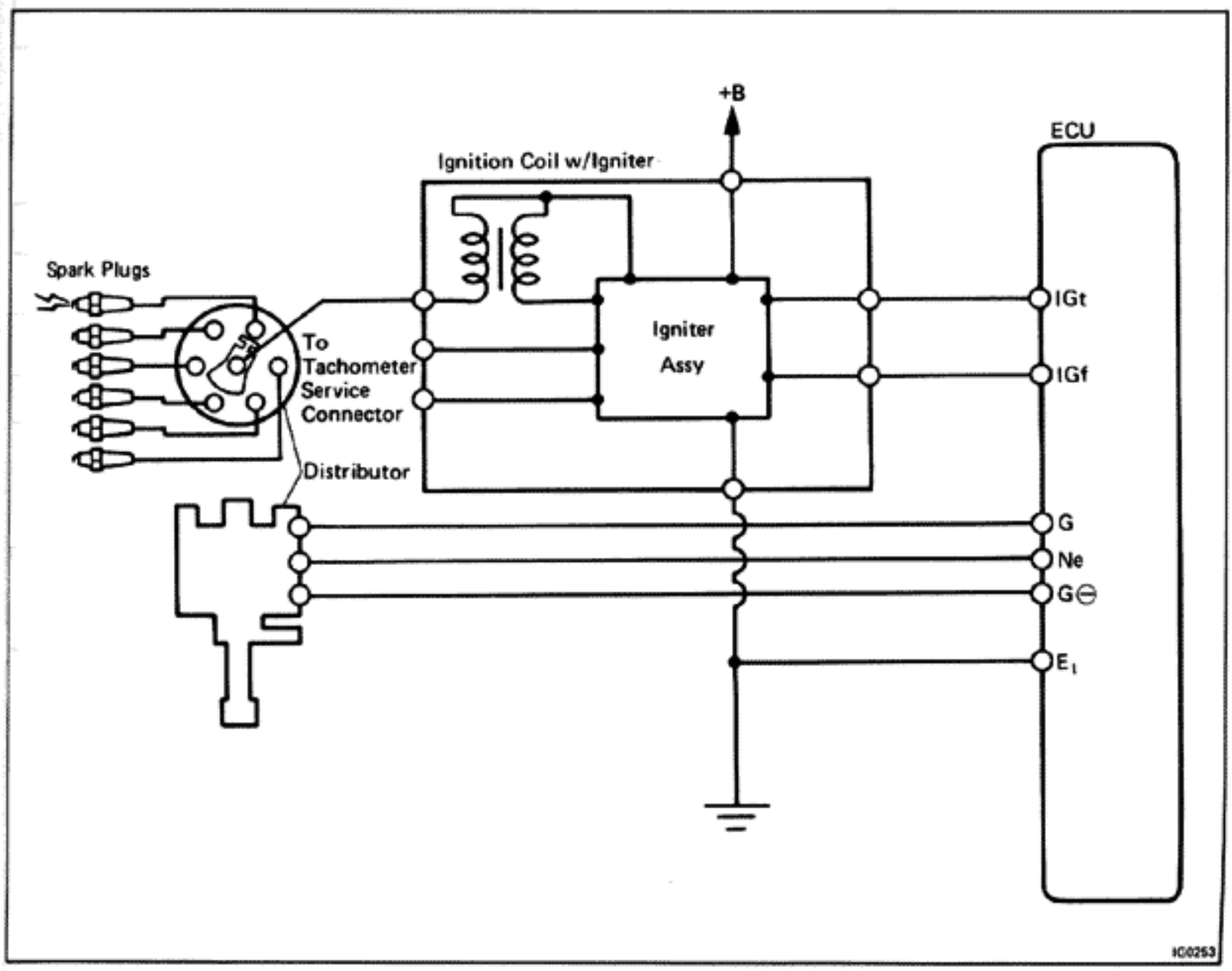

ON-VEHICLE INSPECTION

SPARK TEST

CHECK THAT SPARK OCCURS

(a) Disconnect high-tension cord from the distributor.

(b) Hold the end approx. 12.7 mm (0.50 in.) from body of car.

(c) See if spark occurs while engine is being cranked.

NOTE: To prevent gasoline from being injected from injectors during this test, crank the engine for no more than 1-2 seconds at a time.

If the spark does not occur, perform the test as follows.

SPARK TEST

NO

CHECK RESISTANCE OF HIGH-TENSION CORDS
(See page IG-5)

BAD → Replace the cord.

OK

CHECK POWER SUPPLY TO IGNITION COIL
1. Ignition switch turn to ON.
2. Check that there is battery voltage at ignition coil positive (+) terminal (brown side).

BAD → Check wiring between ignition switch to ignition coil.

OK

CHECK RESISTANCE OF IGNITION COIL
Resistance (cold) Primary : 0.4 — 0.5 Ω
Secondary: 8.5 — 11.5 kΩ

BAD → Replace the ignition coil.

OK

CHECK RESISTANCE OF DISTRIBUTOR PICK UP COIL
Resistance: Approx. 160 Ω

BAD → Replace the pick up coil.

OK

CHECK IGt SIGNAL FROM ECU
(See page FI-43)

BAD → Check wiring between ECU and distributor, only then try another ECU.

OK

TRY ANOTHER IGNITER

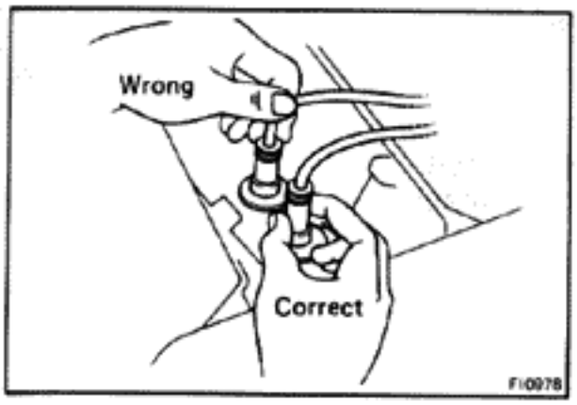

INSPECTION OF HIGH-TENSION CORD

1. **CAREFULLY REMOVE HIGH TENSION CORDS BY RUBBER THEIR BOOTS**

   CAUTION: DO NOT pull on the cords or bend the wires. The conductor inside may be damaged.

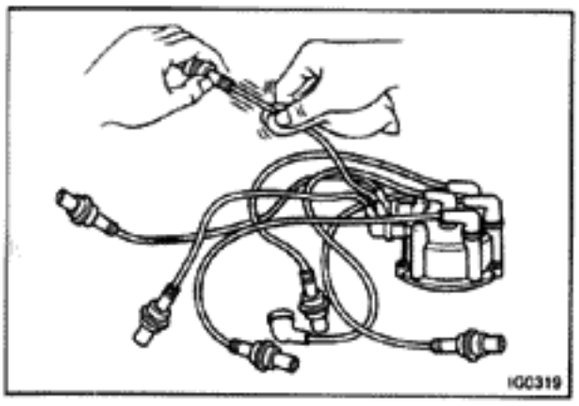

2. **INSPECT CORD TERMINALS**

   Check the terminals for corrosion, breaks or distortion. Replace wire as required.

3. **CHECK WIRE RESISTANCE**

   Using an ohmmeter, check that the resistance does not exceed the maximum. Replace the cord as required.

   Maximum resistance: 25 kΩ per cord

INSPECTION OF SPARK PLUG
(Platinum Tipped Spark Plug)

CAUTION:

- **NEVER USE WIRE BRUSH FOR CLEANING**
- **NEVER ATTEMPT TO ADJUST GAP ON USED PLUG**
- **SPARK PLUGS SHOULD BE REPLACED EVERY 60,000 miles (100,000 km)**

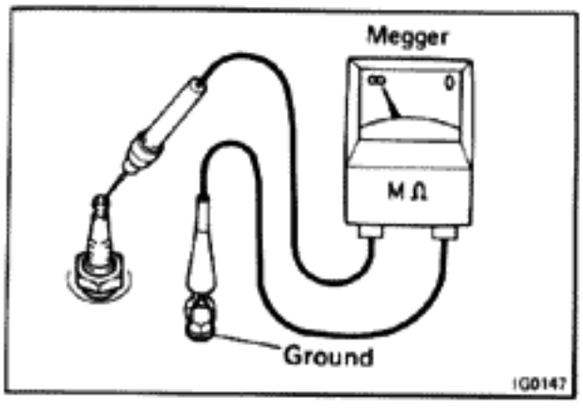

1. **INSPECT ELECTRODE**

   (a) If using a megger (insulation resistance meter): Measure the insulation resistance.

   Correct insulation resistance: More than 10 MΩ

   If less than 10 MΩ, clean the plug. (See page IG-6)

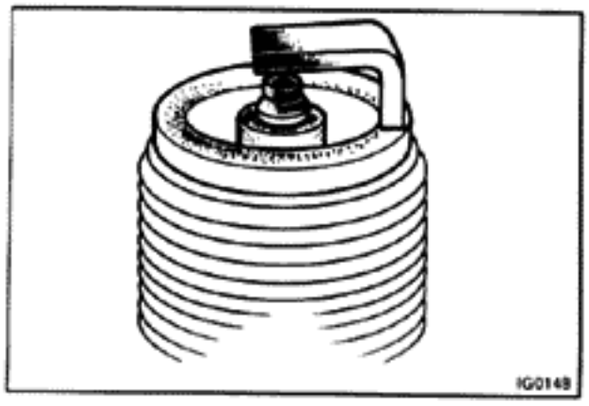

   (b) If not using a megger:

   Quickly race the engine to 4,000 rpm five times. Visually inspect the spark plugs.

   If the electrode is dry ..... Okay
   If the electrode is wet ..... Clean the plug

2. **REMOVE SPARK PLUGS**

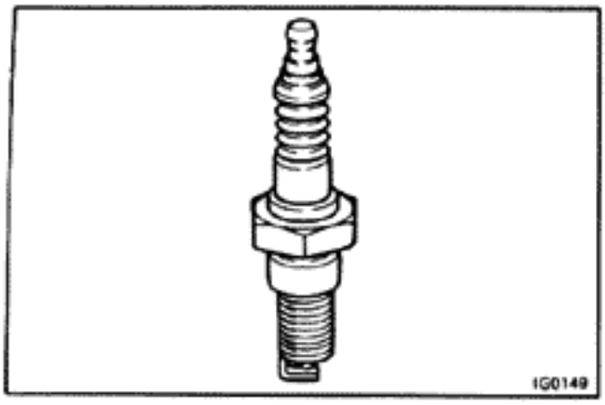
IG0149

3. VISUALLY INSPECT SPARK PLUGS

Inspect the spark plugs for thread or insulator damage.

If defective, replace the plug.

Spark plug: ND P16R
NGK BPR5EP11

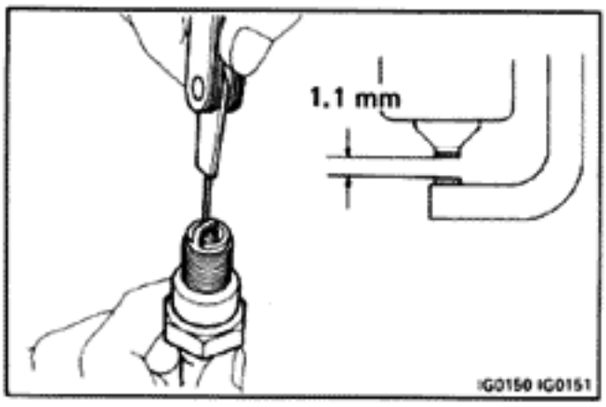

IG0150 IG0151

4. INSPECT ELECTRODE GAP

Maximum limit: 1.4 mm (0.055 in.)

If limit is exceeded, replace the plug.

Correct electrode gap of new plug:
1.1 mm (0.043 in.)

If adjusting the gap of a new plug, bend only the base of the ground electrode, do not touch the tip.

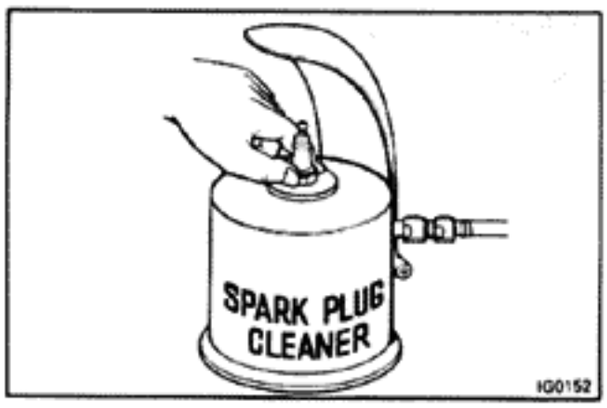

IG0152

5. CLEAN SPARK PLUGS

If the electrode has traces of wet carbon, allow it to dry and then clean with a spark plug cleaner.

Air pressure: Bellow 6 kg/cm² (85 psi, 588 kPa)
Duration: 20 seconds or less

NOTE: If there are traces of oil, clean it off with gasoline before using the spark plug cleaner.

6. INSTALL SPARK PLUGS

Torque: 170 kg-cm (12 ft-lb, 17 N·m)

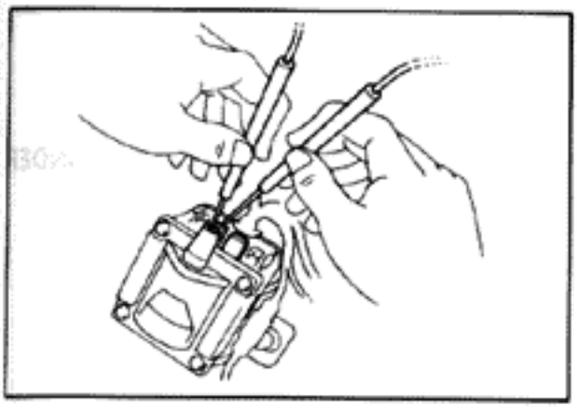

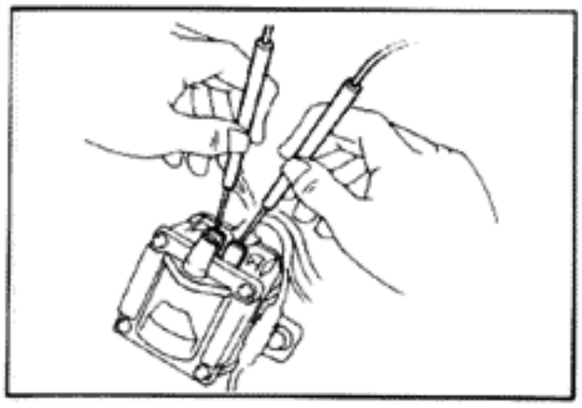

INSPECTION OF IGNITION COIL

1. **DISCONNECT HIGH-TENSION CORD**

2. **MEASURE COIL RESISTANCE**

   (a) Disconnect ignition coil connectors.

   (b) Measure primary coil resistance.

   Using an ohmmeter, measure the resistance between the positive (+) (brown side) and negative (—) (black side) terminals.

   Primary coil resistance (cold): 0.4 — 0.5 Ω

   (c) Measure secondary coil resistance.

   Using an ohmmeter, measure the resistance between the positive (+) terminal (brown side) and the high tension terminal.

   Secondary coil resistance (cold): 8.5 — 11.5 kΩ

3. **CONNECT HIGH-TENSION CORD**

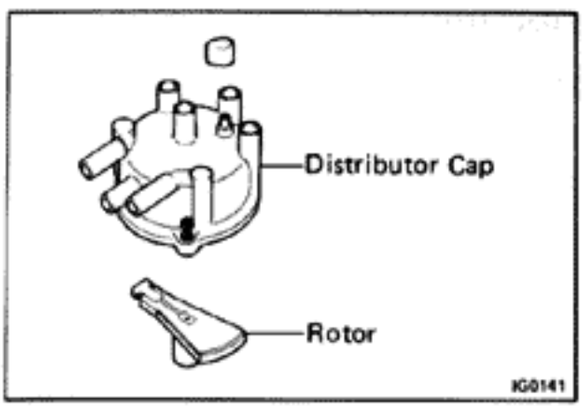

ON-VEHICLE INSPECTION OF DISTRIBUTOR

1. **INSPECT DISTRIBUTOR CAP AND ROTOR**

   (a) Check for cracks, carbon tracks, burnt or corroded terminals.

   (b) Check the distributor center contact for wear.

   If a problem is found, replace the component.

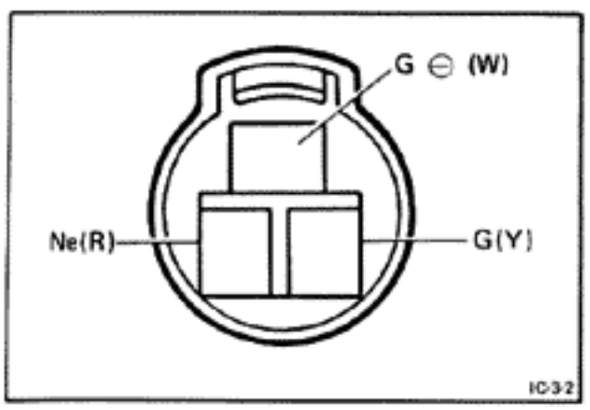

2. **CHECK PICKUP COIL**

   Using an ohmmeter, check each resistance of the two pick-up coils.

   G pickup coil resistance:
   G — G⊖ 140 — 180 Ω
   Ne pickup coil resistance:
   Ne — G⊖ 140 — 180 Ω

   If the resistance is not correct, replace the distributor.

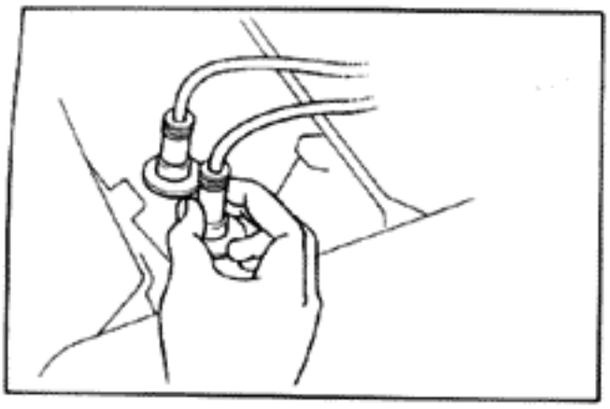

DISTRIBUTOR

REMOVAL OF DISTRIBUTOR

1. **DISCONNECT HIGH TENSION CORDS FROM CYLINDER HEAD AND IGNITION COIL**
2. **DISCONNECT DISTRIBUTOR CONNECTOR**

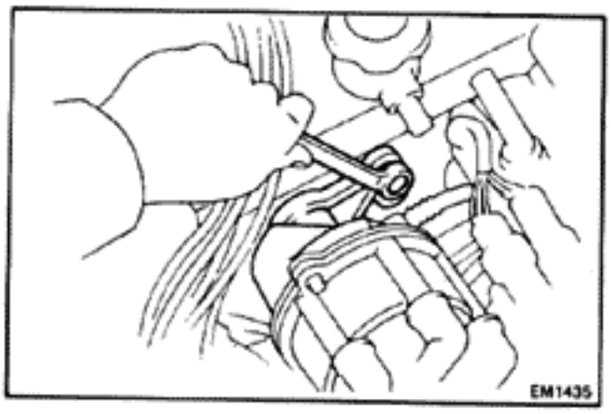

3. **REMOVE DISTRIBUTOR SET BOLT**
4. **PULL OUT DISTRIBUTOR FROM CYLINDER HEAD**
5. **REMOVE O-RING**

REPLACEMENT DISTRIBUTOR DRIVE GEAR

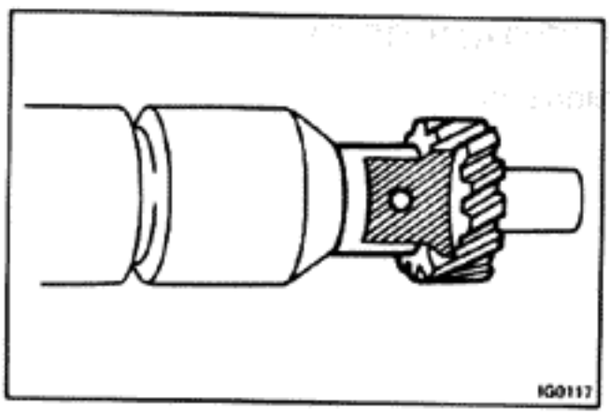

1. **GRIND DRIVE GEAR AND PIN**

   Using a grinding wheel, grind the gear and pin.

   CAUTION: Be careful not to damage the shaft.

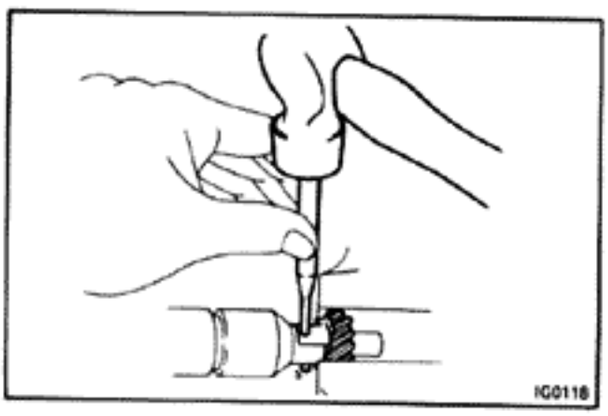

2. **REMOVE PIN AND DRIVE GEAR**
   (a) Using a punch and hammer, drive out the pin.
   (b) Remove the drive gear and discard it.

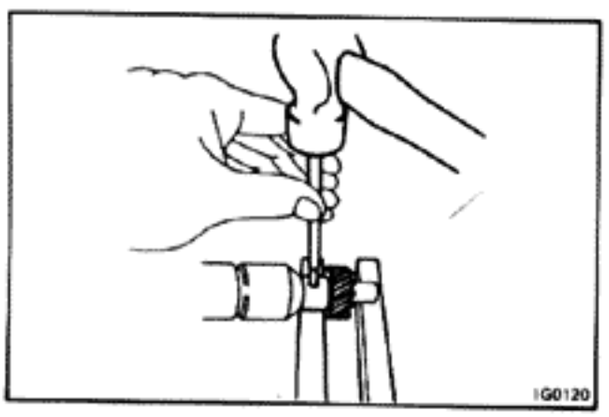

3. **INSTALL NEW DRIVE GEAR AND PIN**
   (a) Align the marks on the housing and new gear.
   (b) Using a hammer, install a new pin.

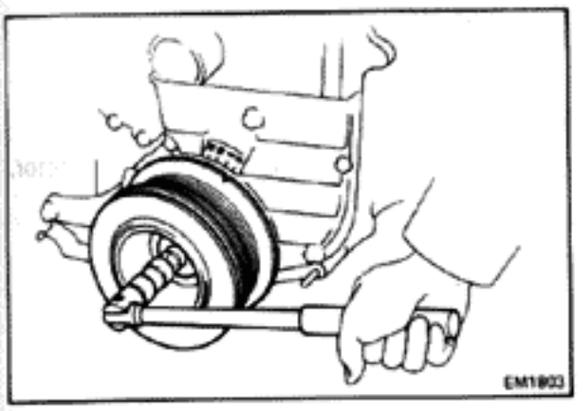

INSTALLATION OF DISTRIBUTOR

1. INSTALL DISTRIBUTOR AND SET TIMING

(a) Turn the crankshaft pulley until the timing mark is aligned with the TDC mark.

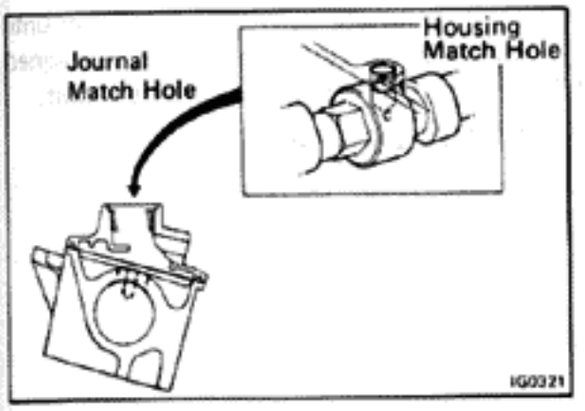

(b) Remove the oil filler cap.

(c) Make sure that the match hole on the No. 2 journal of the camshaft housing is aligned with that of the camshaft.

NOTE: If not, turn the crankshaft one full turn.

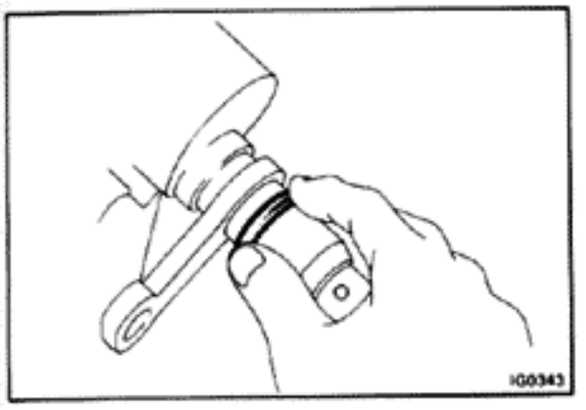

(d) Install the new O-ring to the distributor.

NOTE: Always use a new O-ring when installing the distributor.

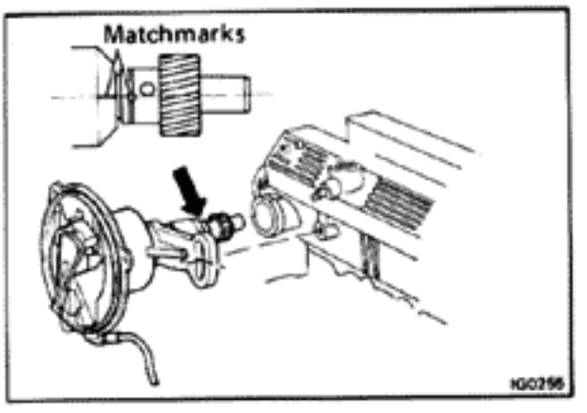

(e) Align the matchmark of the distributor (the drillmark on spiral gear) with that of distributor housing.

(f) Insert the distributor, aligning the center of flange with that of the bolt hole of cylinder head.

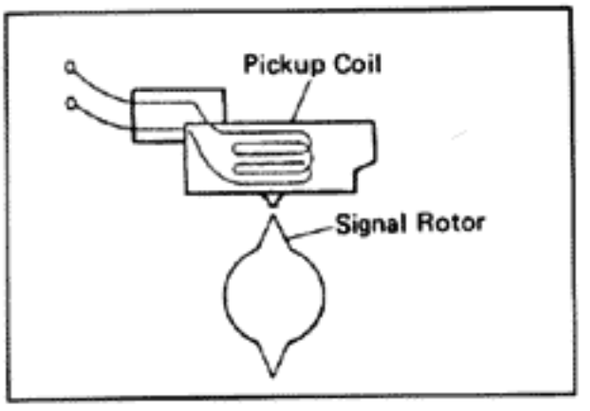

(g) Align the rotor tooth with the pickup coil.

(h) Temporarily install the distributor set bolt.

(i) Install the distributor cap with wires.

(j) Connect the distributor connector.

(k) Install the oil filler cap.

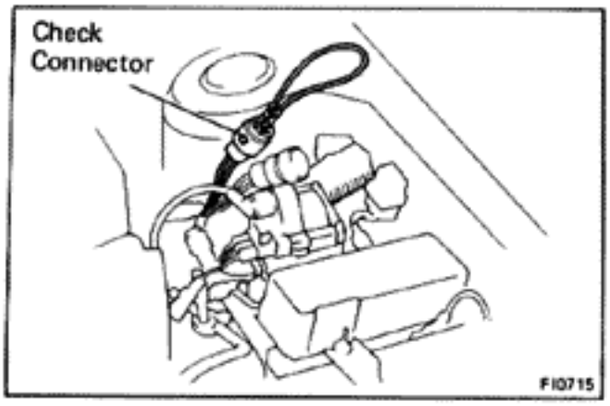

2. ADJUST IGNITION TIMING

(a) Connect a timing light to the engine.

(b) Start the engine and run it at idle.

(c) Short circuit the terminals of the check connector, T and E_1

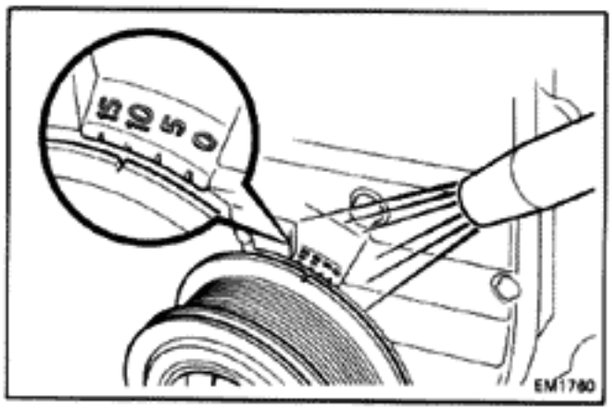

(d) Using a timing light, slowly turn the distributor until the timing mark on the crankshaft pulley is aligned with the 10° mark. Tighten the distributor bolt.

Ignition timing: 10° BTDC@ (T and E_1)

Torque: 140 kg-cm (10 ft-lb, 14 N·m)

(e) Unshort the check connector.

STARTING SYSTEM

	Page
TROUBLESHOOTING	ST-2
STARTING SYSTEM CIRCUIT	ST-2
STARTER	ST-3

TROUBLESHOOTING

Problem	Possible cause	Remedy	Page
Engine will not crank	Battery charge low	Check battery specific gravity Charge or replace battery	CH-3
	Battery cables loose, corroded or worn	Repair or replace cables	
	Neutral start switch faulty (A/T only)	Replace switch	
	Fusible link blown	Replace fusible link	
	Starter faulty	Repair starter	ST-3
	Ignition switch faulty	Replace ignition switch	
Engine cranks slowly	Battery charge low	Check battery specific gravity Charge or replace battery	CH-3
	Battery cables loose, corroded or worn	Repair or replace cables	
	Starter faulty	Repair starter	ST-3
Starter keeps running	Starter faulty	Repair starter	ST-3
	Ignition switch faulty	Replace ignition switch	
	Short in wiring	Repair wiring	
Starter spins — engine will not crank	Pinion gear teeth broken or faulty starter	Repair starter	ST-3
	Flywheel teeth broken	Replace flywheel	

STARTING SYSTEM CIRCUIT

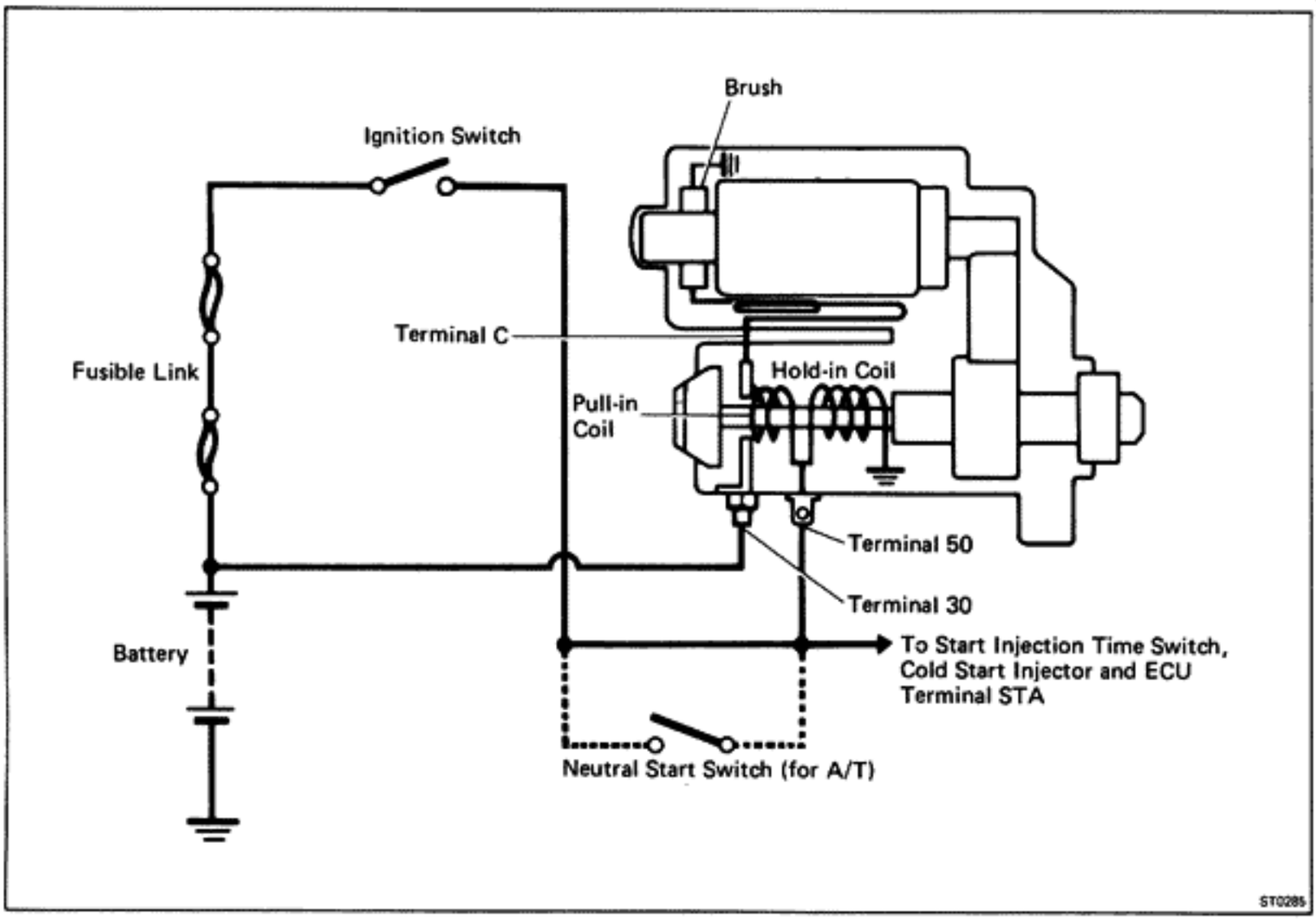

STARTER

COMPONENTS

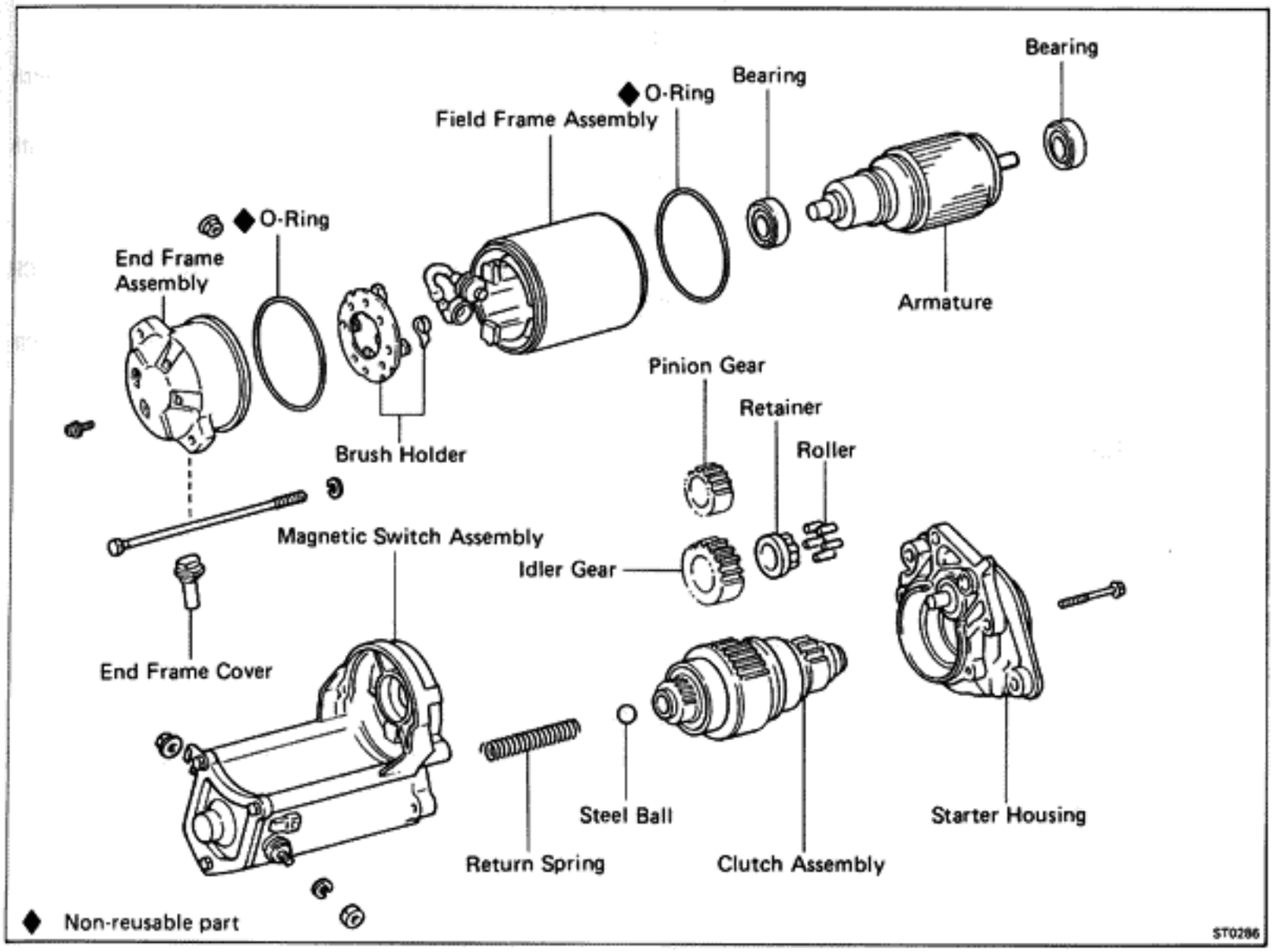

REMOVAL OF STARTER

1. **DISCONNECT CABLE FROM NEGATIVE TERMINAL OF BATTERY**

2. **DISCONNECT TWO WIRES FROM STARTER**

   Remove the nut and disconnect the battery cable from the magnetic switch on the starter motor. Disconnect the other wire from the terminal.

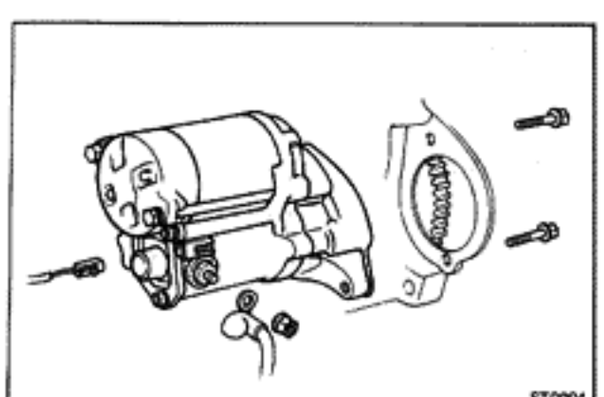

3. **REMOVE STARTER MOTOR**

   Remove the two bolts, and remove the starter motor from the flywheel bellhousing.

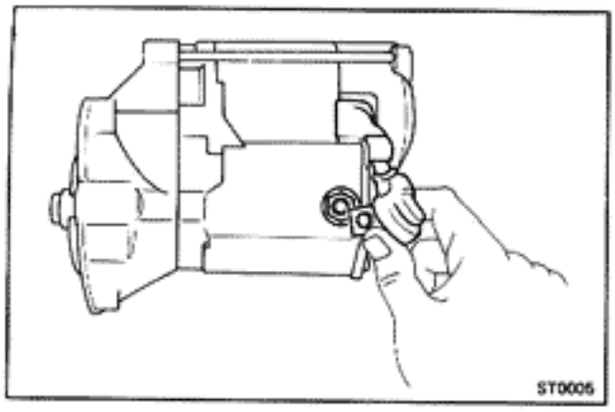

DISASSEMBLY OF STARTER

(See page ST-3)

1. **REMOVE FIELD FRAME WITH ARMATURE FROM MAGNETIC SWITCH**
   (a) Disconnect the lead wire from the magnetic switch terminal.
   (b) Remove the two bolts. Pull out the field frame with the armature from the magnetic switch.
   (c) Remove the O-ring.

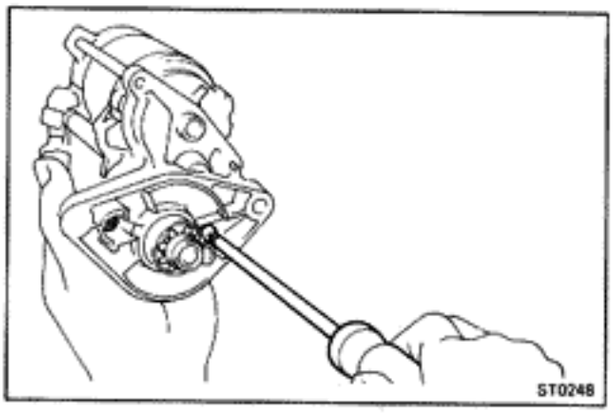

2. **REMOVE STARTER HOUSING FROM MAGNETIC SWITCH ASSEMBLY**
   Remove the two screws and remove the starter housing.

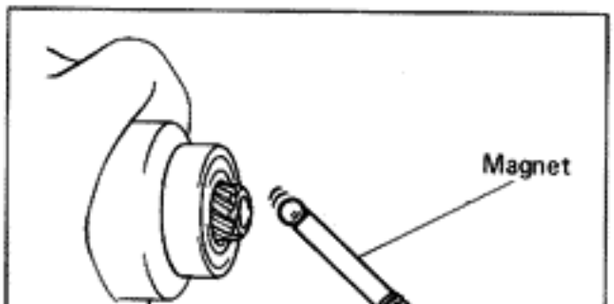

3. **REMOVE CLUTCH ASSEMBLY AND GEARS FROM MAGNETIC SWITCH ASSEMBLY**

4. **REMOVE STEEL BALL**
   Using a magnet, remove the steel ball from the clutch shaft hole.

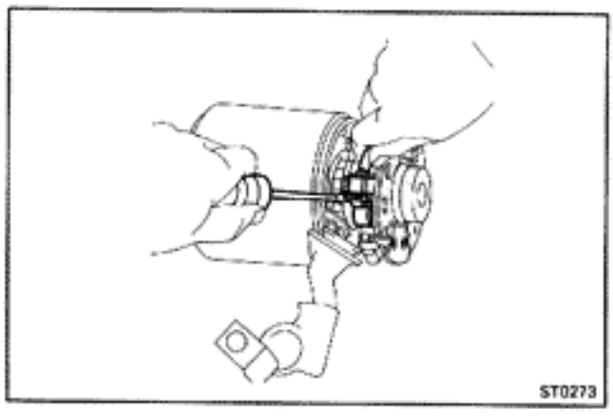

5. **REMOVE BRUSHES AND BRUSH HOLDER**
   (a) Remove the end cover from the field frame.
   (b) Remove the O-ring
   (c) Using a screwdriver, separate the brush and brush spring, and remove the brush from the brush holder.
   (d) Pull the brush holder off the armature.

6. **REMOVE ARMATURE FROM FIELD FRAME**

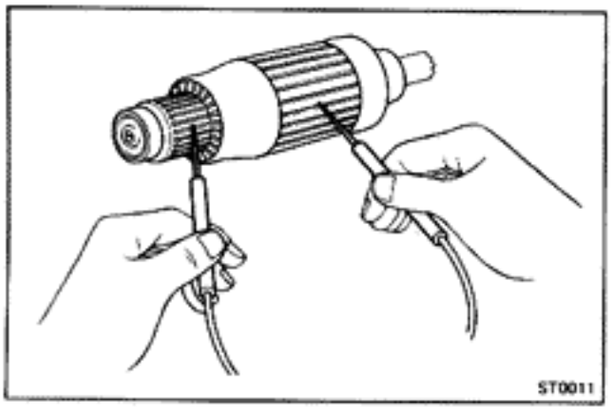

INSPECTION OF STARTER

Armature Coil

1. **CHECK THAT COMMUTATOR IS NOT GROUNDED**
   Using an ohmmeter, check that there is no continuity between the commutator and armature coil core.
   If there is continuity, replace the armature.

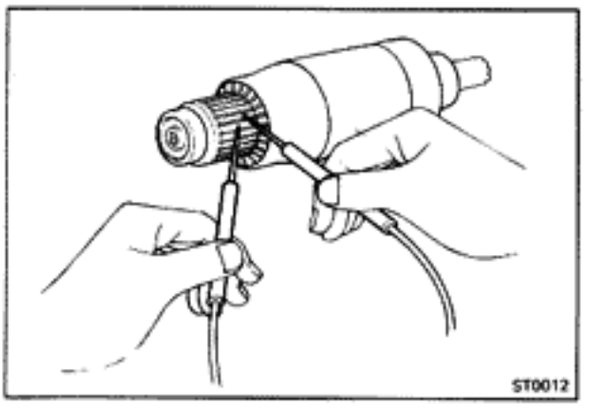

2. CHECK COMMUTATOR FOR OPEN CIRCUIT

Using an ohmmeter, check for continuity between the segments of the commutator.

If there is no continuity between any segment, replace the armature.

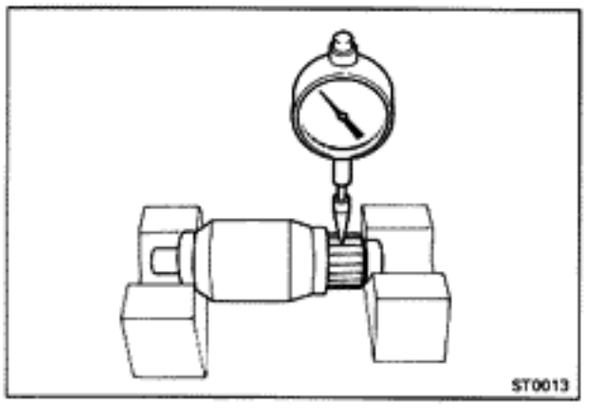

Commutator

1. INSPECT COMMUTATOR FOR DIRTY AND BURNT SURFACES

If the surface is dirty or burnt, correct with sandpaper (No. 400) or a lathe.

2. CHECK COMMUTATOR RUNOUT

Maximum circle runout: 0.05 mm (0.0020 in.)

If runout is greater than the maximum, correct with a lathe.

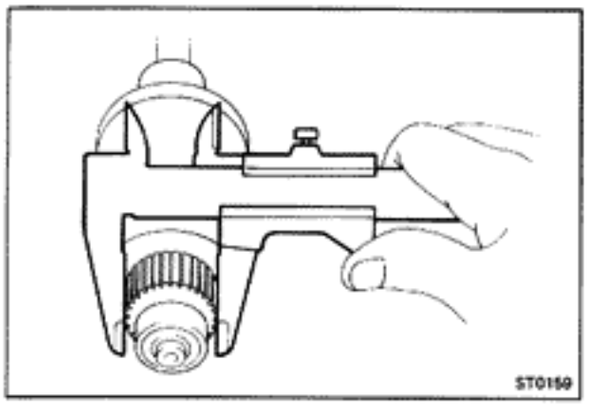

3. MEASURE DIAMETER OF COMMUTATOR

Standard diameter: 30 mm (1.18 in.)
Minimum diameter: 29 mm (1.14 in.)

If the diameter of the commutator is less than the minimum, replace the armature.

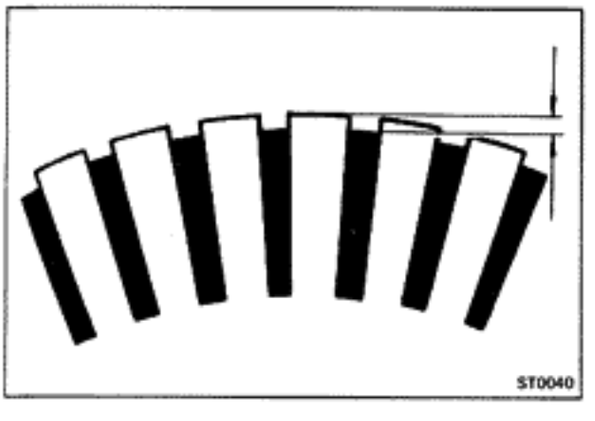

4. CHECK SEGMENT

Check that the segment is clean and free of foreign particles, and smooth out the edge.

Standard undercut depth: 0.6 mm (0.024 in.)
Minimum undercut depth: 0.2 mm (0.008 in.)

If the undercut depth is less than the minimum, correct with a hacksaw.

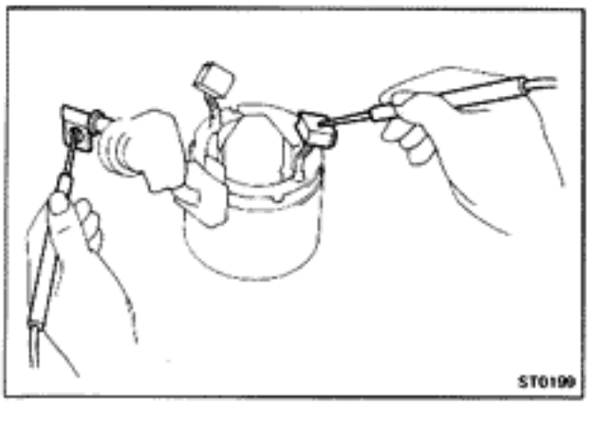

Field Coil

1. CHECK FIELD COIL FOR OPEN CIRCUIT

Using an ohmmeter, check for continuity between the lead wire and field coil brush lead.

If there is no continuity, replace the field frame.

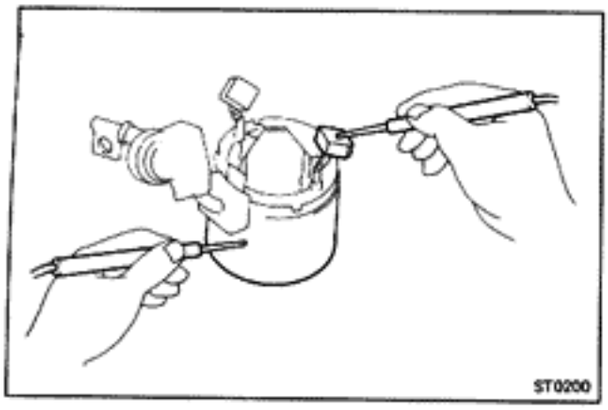

2. CHECK THAT FIELD COIL IS NOT GROUNDED

Using an ohmmeter, check for continuity between the field coil end and field frame.

If there is continuity, repair or replace the field frame.

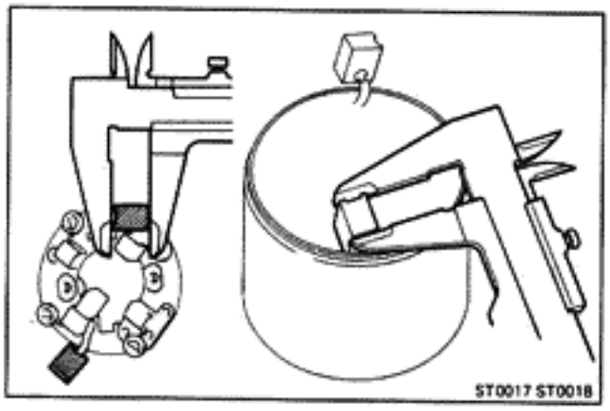

Brushes

MEASURE BRUSH LENGTH

Standard length: 15.5 mm (0.610 in.)
Minimum length: 10 mm (0.39 in.)

If length is less than minimum, replace the brush or dress with emery cloth.

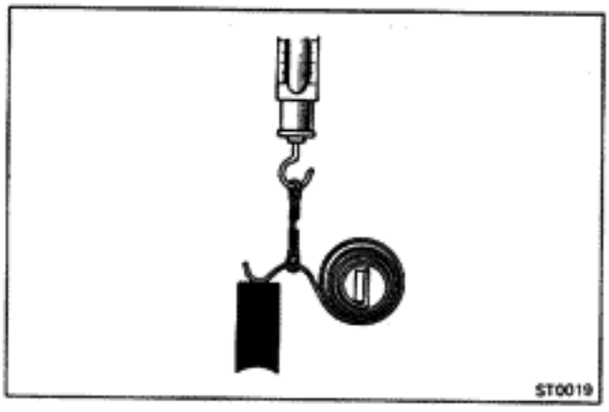

Brush Springs

MEASURE BRUSH SPRING LOAD WITH A PULL SCALE

Tension: 1,785 — 2,415 g (3.9 — 5.3 lb)

If the reading is below standard, replace the brush spring.

NOTE: Take the pull scale reading the instant the brush spring separates from the brush.

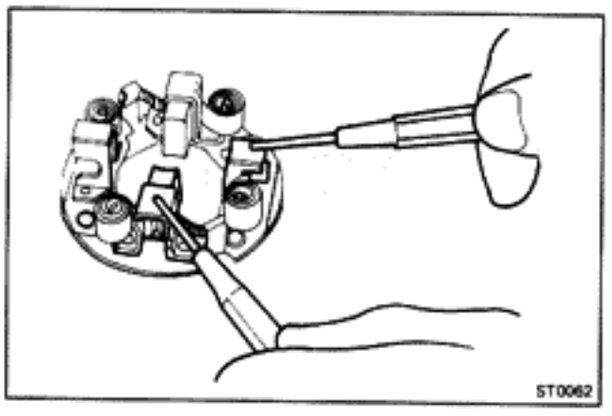

Brush Holder

CHECK INSULATION OF BRUSH HOLDER

Using an ohmmeter, check for continuity between the positive and negative brush holders.

If there is continuity, repair or replace the brush holder.

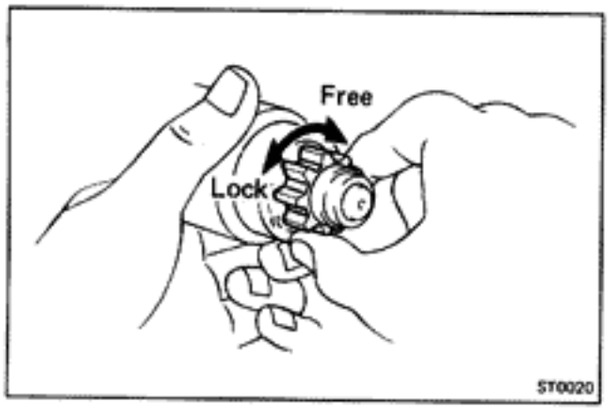

Clutch and Gears

1. INSPECT GEAR TEETH

Inspect the gear teeth on the pinion gear, idler gear and clutch assembly for wear or damage. Replace if damaged.

If damaged, also inspect the flywheel ring gear for wear or damage.

2. CHECK CLUTCH

Rotate the pinion clockwise and check that it turns freely. Try to rotate the pinion counterclockwise and check that it locks.

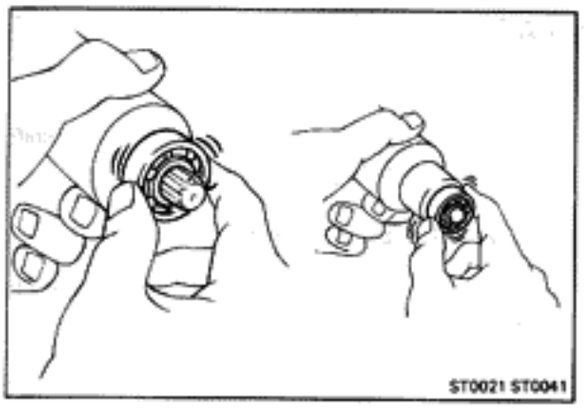

Bearings

1. **CHECK BEARINGS**

Turn each bearing by hand while applying inward force.

If resistance is felt or if the bearing sticks, replace the bearing.

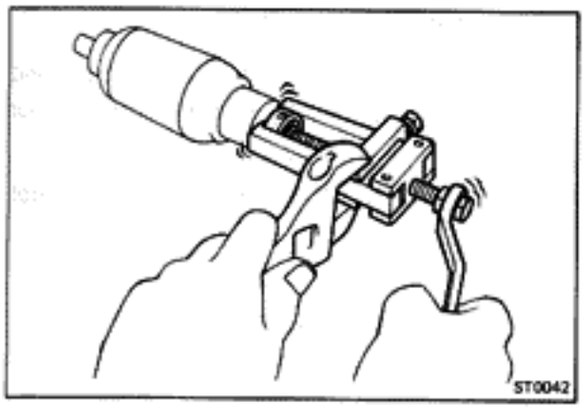

2. **IF NECESSARY, REPLACE BEARINGS**

(a) Using SST, remove the bearing from the armature shaft.

(b) Using SST, remove the other bearing from the opposite side.

SST 09286-46011

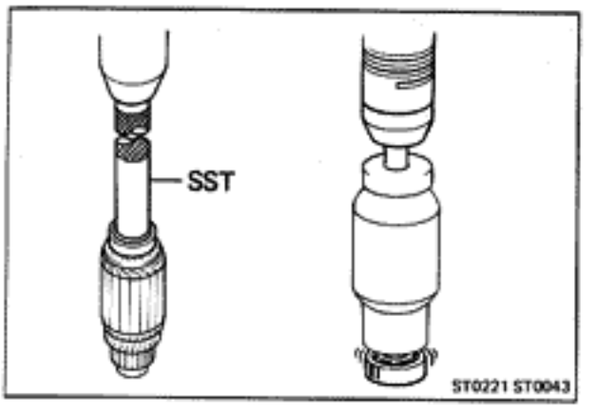

(c) Using SST and press, tap the front bearing onto the shaft.

SST 09201-41020

(d) Using a press, install the rear bearing onto the shaft.

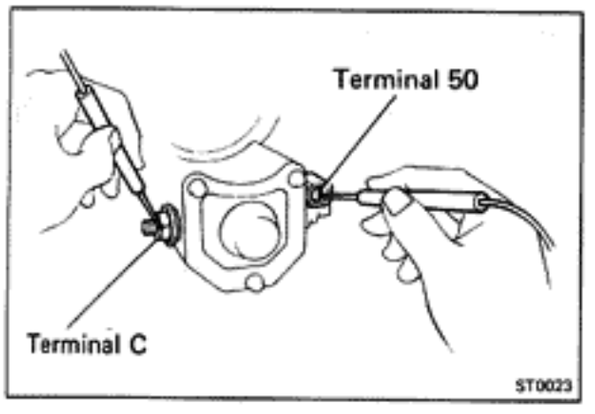

Magnetic Switch

1. **PERFORM PULL-IN COIL OPEN CIRCUIT TEST**

Using an ohmmeter, check for continuity between terminal 50 and the terminal C.

If there is no continuity, replace the magnetic switch.

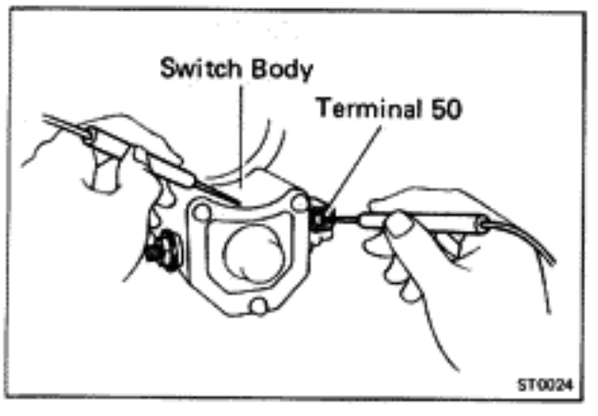

2. **PERFORM HOLD-IN COIL OPEN CIRCUIT TEST**

Using an ohmmeter, check for continuity between terminal 50 and switch body.

If there is no continuity, replace the magnetic switch.

ASSEMBLY OF STARTER

(See page ST-3)

NOTE: Use high-temperature grease to lubricate the bearings and gears when assembling the starter.

1. PLACE ARMATURE INTO FIELD FRAME

Apply grease to the armature bearings and insert the armature into the field frame.

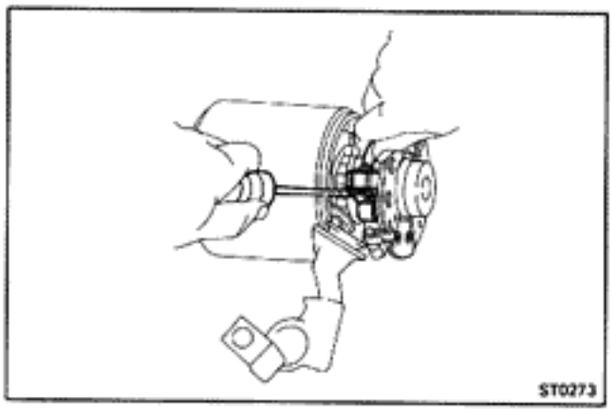

2. INSTALL BRUSH HOLDER AND BRUSHES

(a) Using a screwdriver, hold the brush spring back and install the brush into the brush holder. Install four brushes.

NOTE: Make sure that the positive lead wires are not grounded.

(b) Place the O-ring on the field frame.

(c) Install the end cover to the field frame.

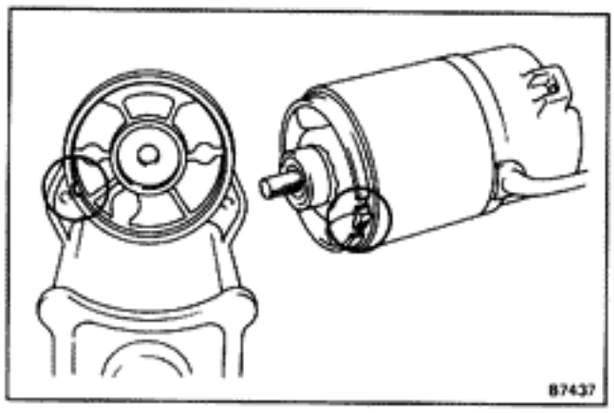

3. INSTALL FIELD FRAME WITH ARMATURE IN MAGNETIC SWITCH

(a) Place the O-ring on the field frame.

(b) Match the protrusion of the field frame with the magnetic switch.

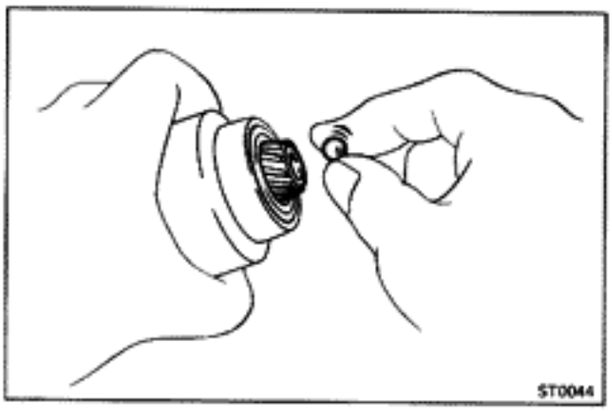

4. INSERT STEEL BALL AND SPRING INTO CLUTCH SHAFT HOLE

Apply grease to the ball and insert it into the clutch shaft hole.

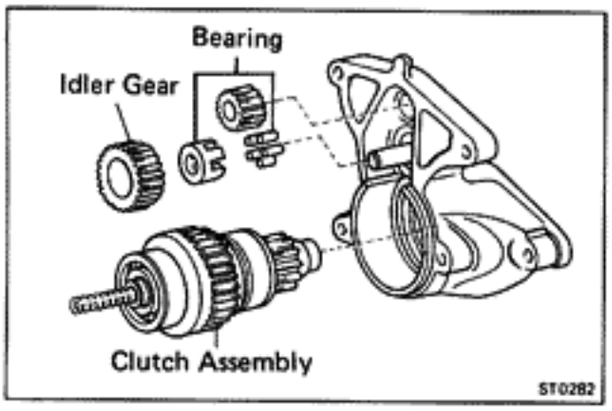

5. INSTALL GEARS AND CLUTCH ASSEMBLY

(a) Apply grease to the gear and clutch assembly.

(b) Place the clutch assembly and idler gear in the starter housing.

(c) Install the pinion gear onto the armature shaft.

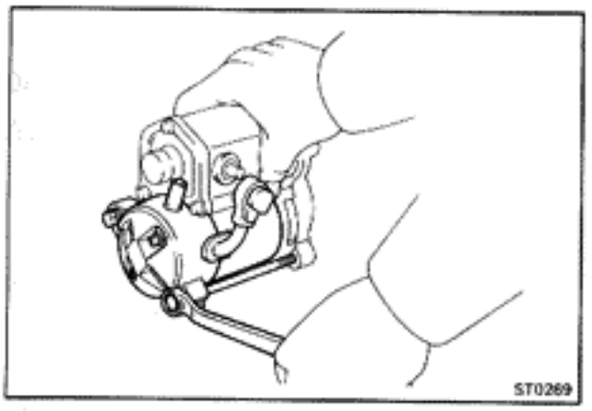

6. INSTALL STARTING HOUSING

(a) Place the starter housing on the magnetic switch and install two screws.

(b) Install two through bolts.

(c) Connect the coil lead to the terminal on the magnetic switch.

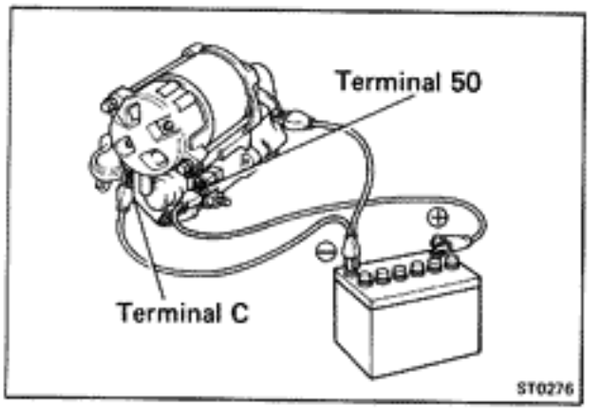

PERFORMANCE TEST OF REDUCTION TYPE STARTER

CAUTION: These tests must be performed within 3 to 5 seconds to avoid burning out the coil.

1. PERFORM PULL-IN TEST

(a) Disconnect the field coil lead from terminal C.

(b) Connect the battery to the magnetic switch as shown. Check that the plunger moves outward.

If the plunger does not move, replace the magnetic switch.

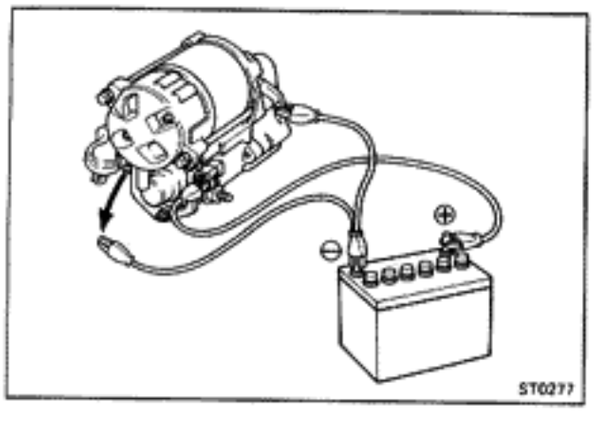

2. PERFORM HOLD-IN TEST

While connected as above with the plunger out, disconnect the negative lead from terminal C. Check that the plunger remains out.

If the plunger returns inward, replace the magnetic switch.

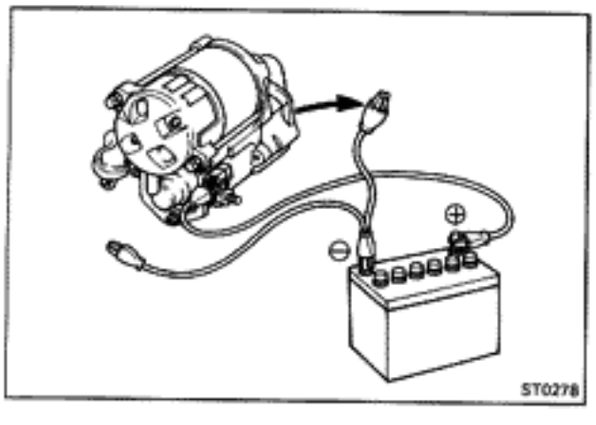

3. CHECK PLUNGER RETURN

Disconnect the negative lead from the switch body. Check that the plunger returns inward.
If the plunger does not return, replace the magnetic switch.

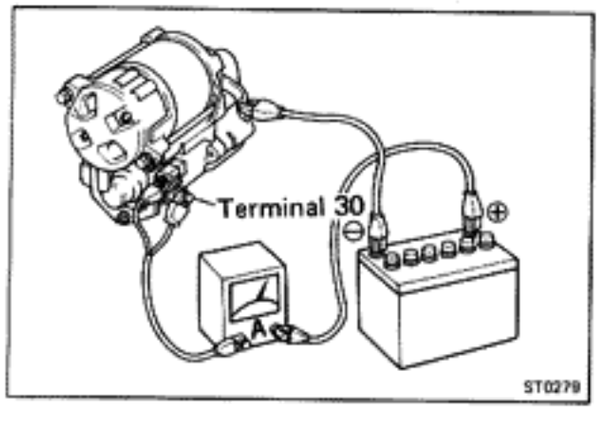

4. PERFORM NO-LOAD PERFORMANCE TEST

(a) Connect the battery and ammeter to the starter as shown.

(b) Check that the starter rotates smoothly and steadily with the pinion moving out. Check that the ammeter reads the specified current.

Specified current: Less than 90 A at 11.5 V

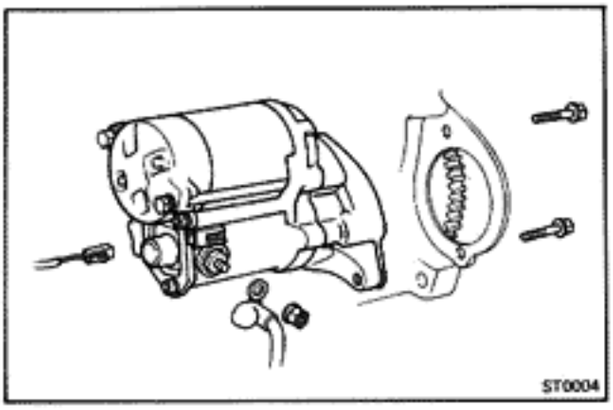

INSTALLATION OF STARTER

1. **INSTALL STARTER MOTOR IN FLYWHEEL BELLHOUSING**

   Place the starter motor in the flywheel bellhousing. Install the two bolts.

2. **CONNECT TWO WIRES TO STARTER**

   Connect the connector to the terminal on the magnetic switch. Connect the cable from the battery to the terminal on the switch, and install the nut.

3. **CONNECT CABLE TO NEGATIVE TERMINAL OF BATTERY**

   Check that the car starts.

CHARGING SYSTEM

	Page
PRECAUTIONS	CH-2
TROUBLESHOOTING	CH-2
ON-VEHICLE INSPECTION	CH-2
ALTERNATOR	CH-5

PRECAUTIONS

1. **Check that the battery cables are connected to the correct terminals.**
2. **Disconnect the battery cables when the battery is given a quick charge.**
3. **Do not perform tests with a high voltage insulation resistance tester.**
4. **Never disconnect the battery when the engine is running.**

TROUBLESHOOTING

Problem	Possible cause	Remedy	Page
Discharge warning light does not light with ignition ON and engine off	Fuse blown	Check "CHARGE" and "IGN" fuses	
	Light burned out	Replace light	
	Wiring connection loose	Tighten loose connections	
	IC regulator faulty	Replace IC regulator	CH-6
Discharge warning light does not go out with engine running (battery requires frequent recharging)	Drive belt loose or worn	Adjust or replace drive belt	CH-3
	Battery cables loose, corroded or worn	Repair or replace cables	
	Fuse blown	Check "ENGINE" fuse	
	Fusible link blown	Replace fusible link	
	IC regulator or alternator faulty	Check charging system	CH-4
	Wiring faulty	Repair wiring	

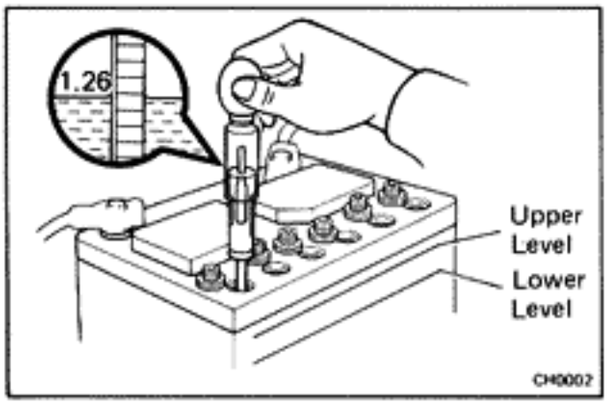

ON-VEHICLE INSPECTION

1. CHECK BATTERY SPECIFIC GRAVITY AND ELECTROLYTE LEVEL

(a) Check the specific gravity of each cell.

Standard specific gravity

When fully charged at 20°C (68°F): 1.25 – 1.27

(b) Check the electrolyte quantity of each cell.
If insufficient, refill with distilled water (or purified water).

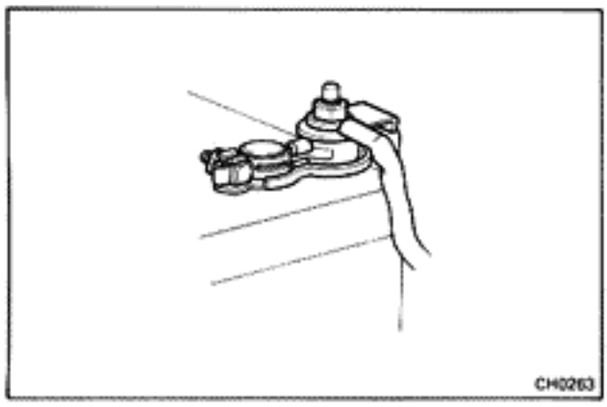

2. CHECK BATTERY TERMINALS AND FUSIBLE LINK

(a) Check that the battery terminals are not loose or corroded.

(b) Check the fusible link for continuity.

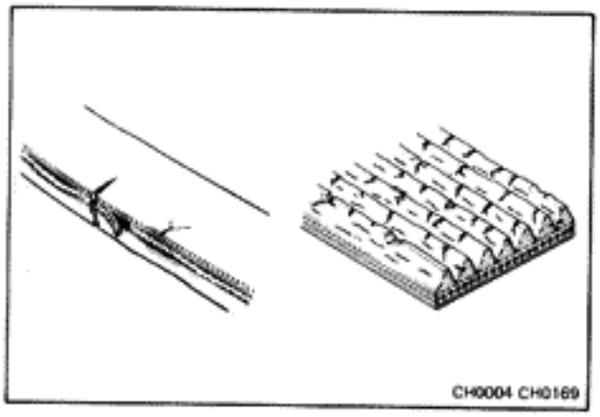

3. INSPECT DRIVE BELT

(a) Visually check the belt for separation of the adhesive rubber above and below the core, core separating from the belt side, severed core, separation of the rib from the adhesive rubber, cracking or separation of the ribs, torn or worn ribs or cracks in the inner ridges of the ribs.

If necessary, replace the drive belt.

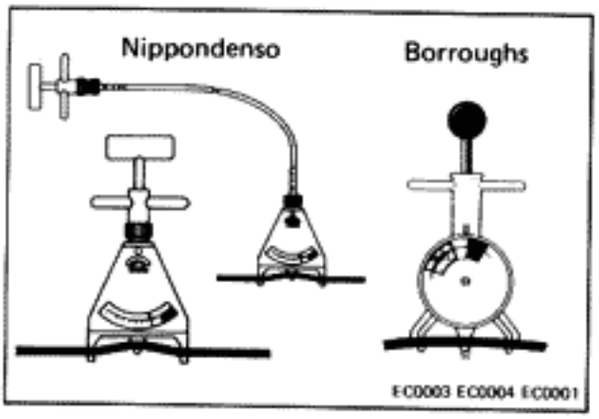

(b) Using a belt tension gauge, check the drive belt tension.

Belt tension gauge:
Nippondenso BTG-20 (95506-00020) or
Borroughs No. BT-33-73F

Drive belt tension:
New belt 170 ± 10 lb
Used belt 135 ± 20 lb

If necessary, adjust the drive belt tension.

NOTE:
- "New belt" refers to a belt which has been used less than 5 minutes on a running engine.
- "Used belt" refers to a belt which has been used on a running engine for 5 minutes or more.
- After installing the drive belt, check that it fits properly in the ribbed grooves.
- Check by hand to confirm that the belt has not slipped out of the groove on the bottom of the crank pulley.
- After installing the belt, run the engine for about 5 minutes and then recheck the tension.

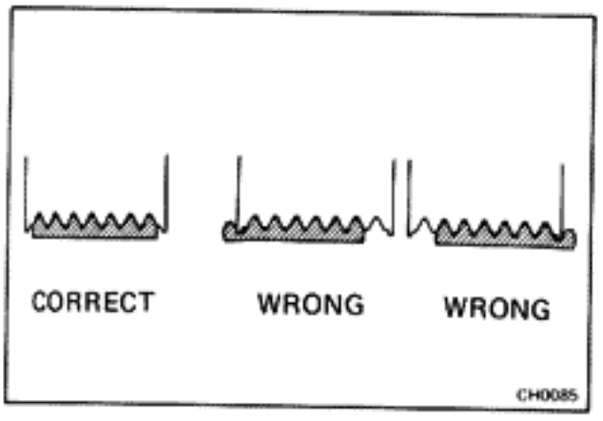

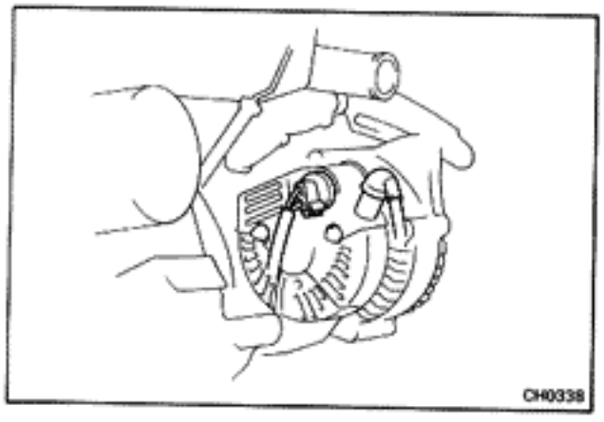

4. CHECK FUSES FOR CONTINUITY

ENGINE fuse (15A)
CHARGE fuse (7.5A)
IGN fuse (7.5A)

5. VISUALLY CHECK ALTERNATOR WIRING AND LISTEN FOR ABNORMAL NOISES

(a) Check that the wiring is in good condition.

(b) Check that there is no abnormal noise from the alternator while the engine is running.

6. CHECK DISCHARGE WARNING LIGHT CIRCUIT

(a) Warm up the engine and then turn it off.

(b) Turn off all accessories.

(c) Turn the ignition switch to ON. Check that the discharge warning light is lit.

(d) Start the engine. Check that the light goes out.

If the light does not come on and go off as specified, troubleshoot the warning light circuit.

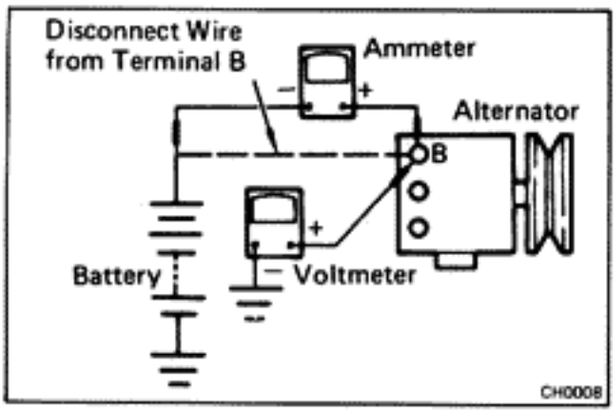

7. CHECK CHARGING CIRCUIT WITHOUT LOAD

NOTE: If a battery/alternator tester is available, connect the tester to the charging circuit according to the manufacturer's instructions.

(a) If a tester is not available, connect a voltmeter and ammeter to the charging circuit as follows:

- Disconnect the wire from terminal B of the alternator and connect it to the negative terminal of the ammeter.
- Connect the test lead from the positive terminal of the ammeter to terminal B of the alternator.
- Connect the positive lead of the voltmeter to terminal B of the alternator.
- Connect the negative lead of the voltmeter to ground.

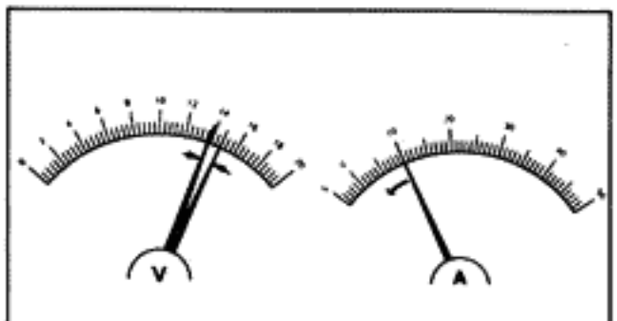

(b) Check the charging circuit as follows:

With the engine running from idling to 2,000 rpm, check the reading on the ammeter and voltmeter.

Standard amperage: **Less than 10A**
Standard voltage: **13.5 – 15.1V**
(Regulator case 25°C or 77°F)

- If the voltage reading is greater than standard voltage, replace the IC regulator.

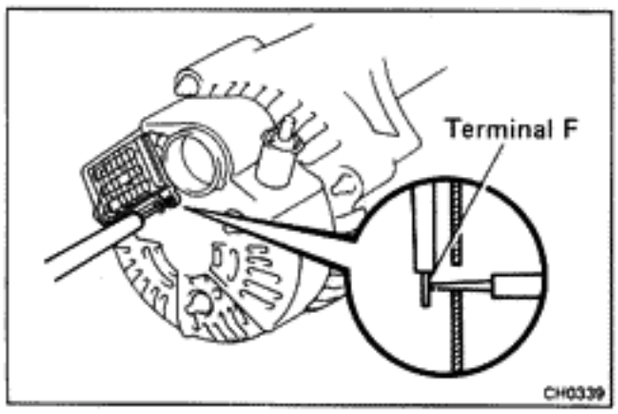

- If the voltage reading is less than standard voltage, check the IC regulator and alternator as follows: With terminal F grounded, start the engine and check the voltage reading of terminal B.
- If the voltage reading is greater than standard voltage, replace the IC regulator.
- If the voltage reading is less than standard voltage, check the alternator.

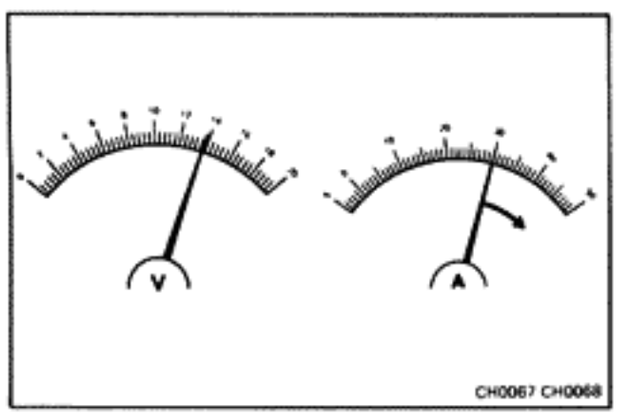

8. CHECK CHARGING CIRCUIT WITH LOAD

(a) With the engine running at 2,000 rpm, turn on the high beam headlights and place the heater fan control switch at HI.

(b) Check the reading on the ammeter.

Standard amperage: **More than 30A**

If the ammeter reading is less than 30A, repair the alternator. (See page CH-5)

NOTE: With the battery fully charged, sometimes the indication will be less than 30A.

ALTERNATOR

COMPONENTS

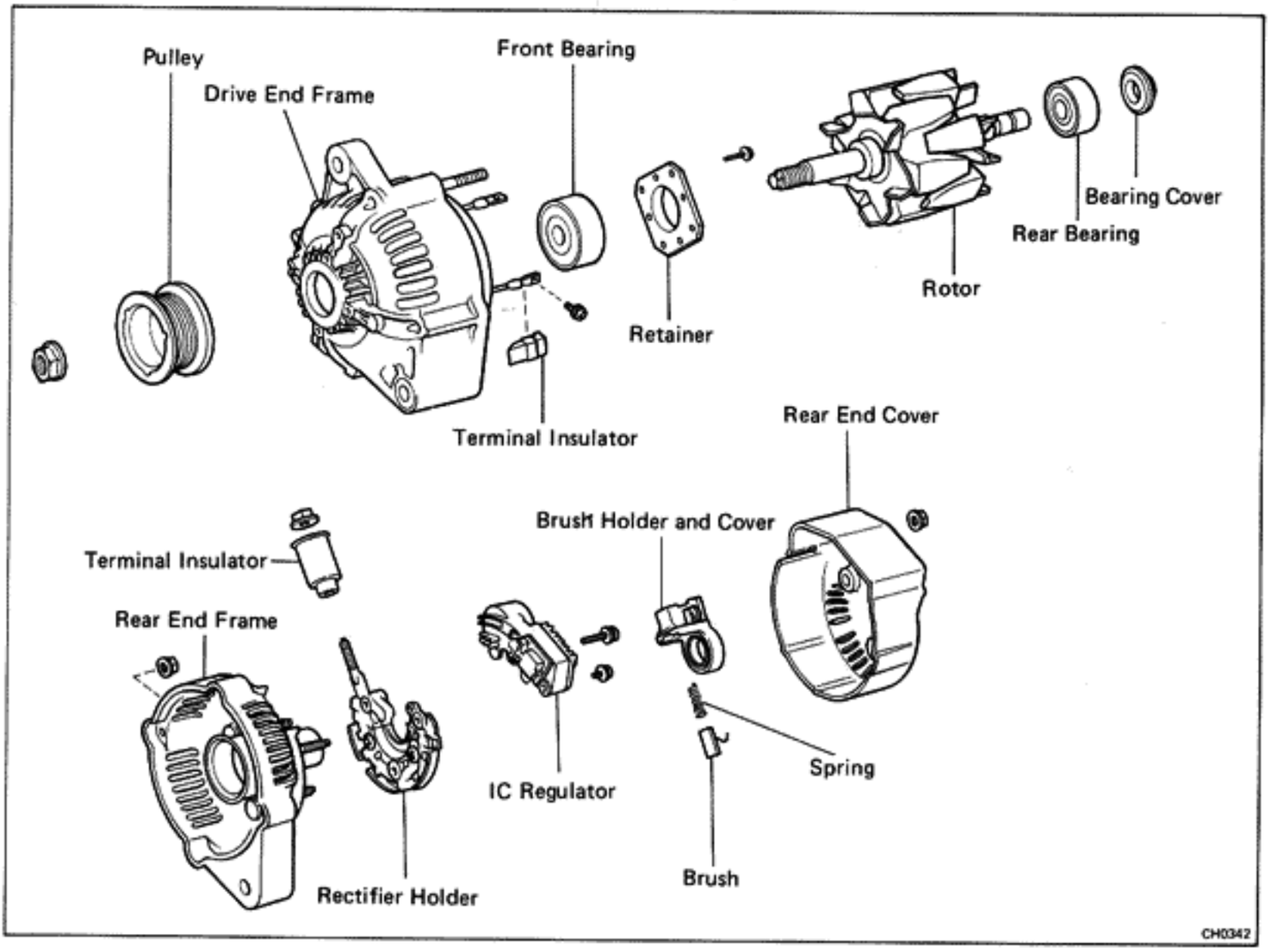

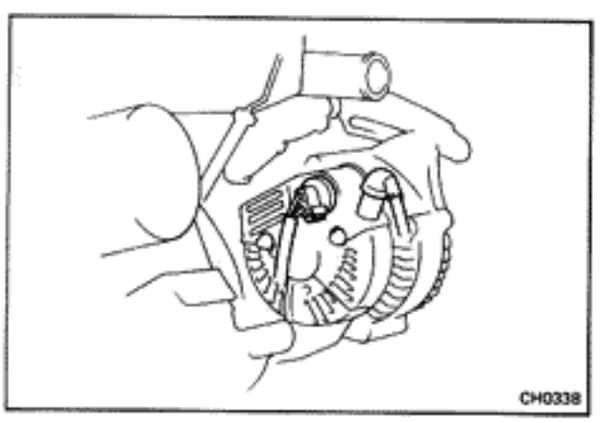

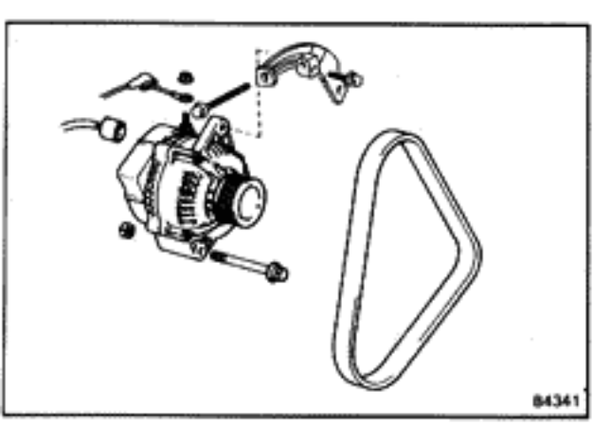

REMOVAL OF ALTERNATOR

1. **DISCONNECT CABLE FROM NEGATIVE TERMINAL OF BATTERY**

2. **DISCONNECT WIRING FROM ALTERNATOR**
   (a) Disconnect the connector from the alternator.
   (b) Remove the nut and wire from the alternator.

3. **REMOVE ALTERNATOR DRIVE BELT**
   Loosen the alternator pivot, adjusting lock and adjusting bolts and remove the alternator drive belt.

4. **REMOVE ALTERNATOR**
   (a) Remove the pivot and adjusting lock bolts.
   (b) Remove the alternator.

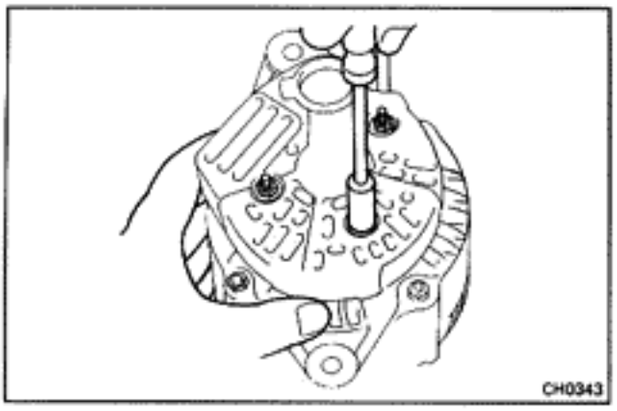

DISASSEMBLY OF ALTERNATOR

(See page CH-5)

1. REMOVE REAR END COVER

(a) Remove the nut and terminal insulator.

(b) Remove the three nuts and end cover.

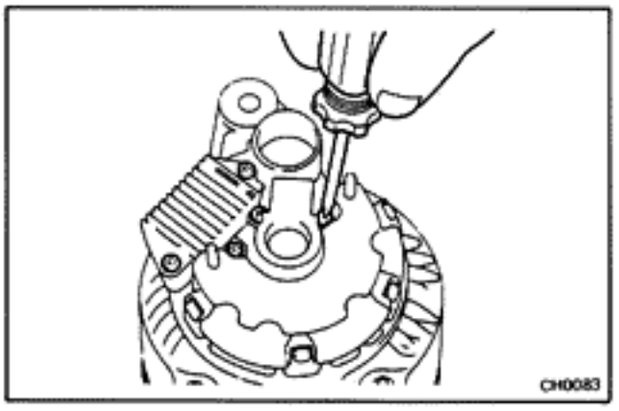

2. REMOVE BRUSH HOLDER AHD IC REGULATOR

Remove the five screws, brush holder, brush holder cover and IC regulator.

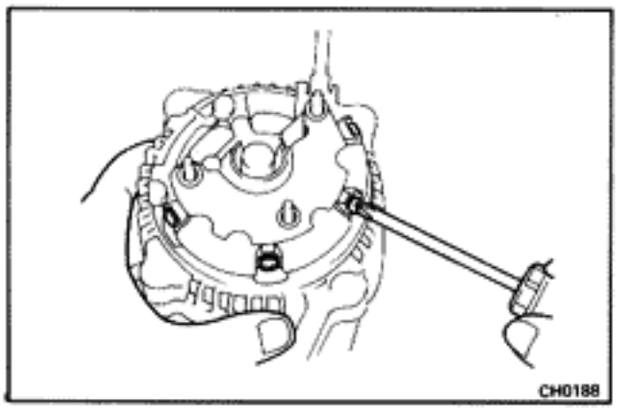

3. REMOVE RECTIFIER HOLDER

(a) Remove the four screws and rectifier holder.

(b) Remove the four rubber terminal insulators.

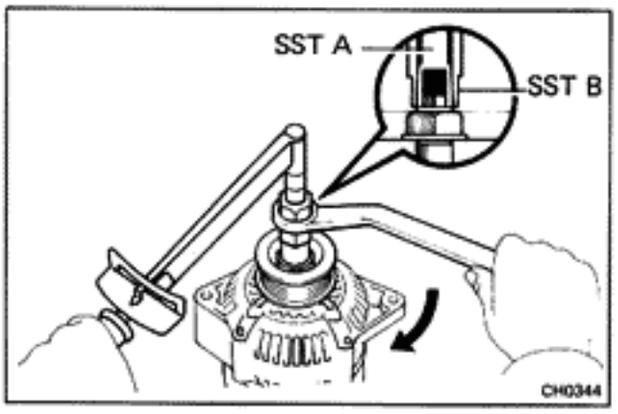

4. REMOVE PULLEY

(a) Hold SST A with a torque wrench and tighten SST B clockwise to the specified torque.

SST 09820-63010

Torque: 400 kg-cm (29 ft-lb, 39 N·m)

(b) Check that SST A is secured to the rotor shaft.

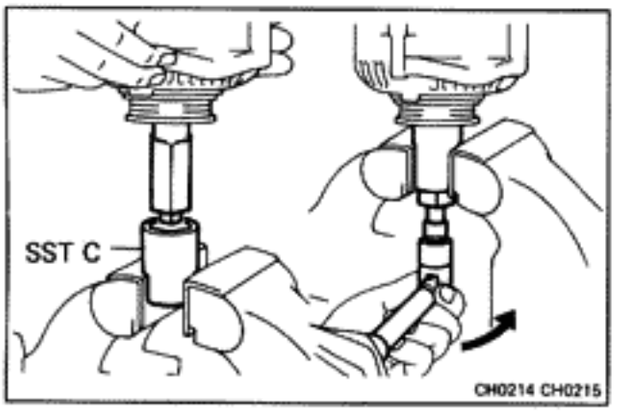

(c) As shown in the figure, mount SST C in a vise and then install the alternator to SST C.

(d) To loosen the pulley nut, turn SST A in the direction shown in the figure.

CAUTION: To prevent damage to the rotor shaft, do not loosen the pulley nut more than one-half of a turn.

(e) Remove the alternator from SST C.

(f) Turn SST B and remove SSTs A and B.

(g) Remove the pulley nut and pulley.

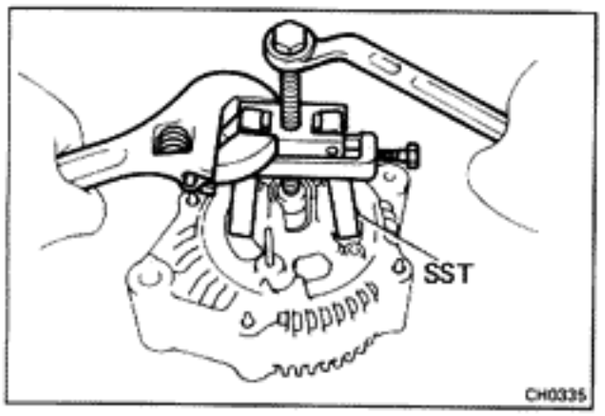

5. REMOVE REAR END FRAME

(a) Remove the four nuts.

(b) Using SST, remove the rear end frame and four terminal insulators.

SST 09286-46011

6. REMOVE ROTOR FROM DRIVE END FRAME

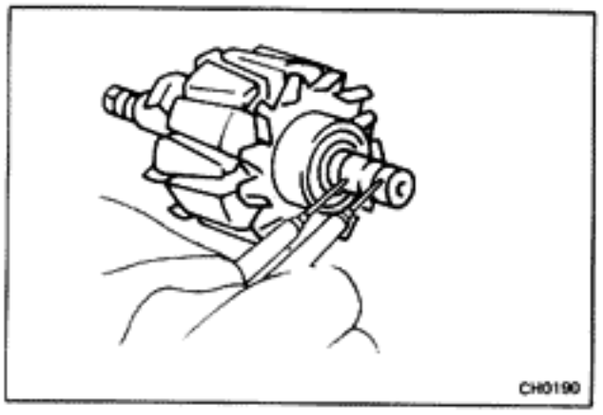

INSPECTION OF ALTERNATOR

Rotor

1. CHECK ROTOR FOR OPEN CIRCUIT

Using an ohmmeter, check for continuity between the slip rings.

Standard resistance: Less than 3 Ω

If there is no continuity, replace the rotor.

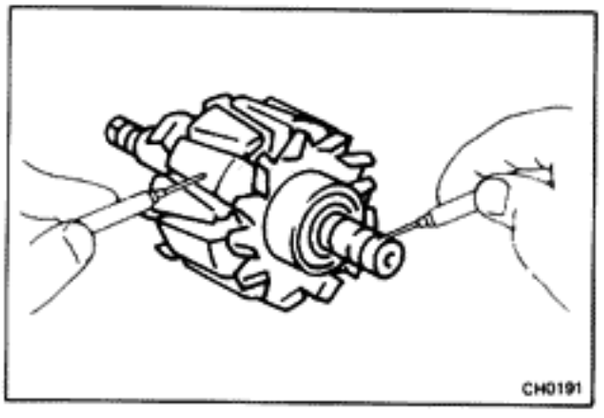

2. CHECK ROTOR FOR GROUND

Using an ohmmeter, check that there is no continuity between the slip ring and the rotor. If there is continuity, replace the rotor.

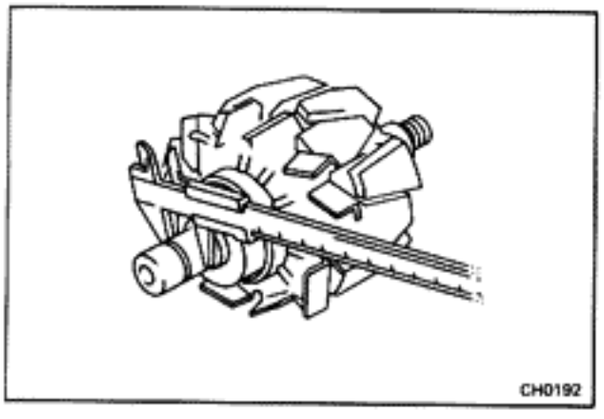

3. INSPECT SLIP RINGS

(a) Check that the slip rings are not rough or scored. If rough or scored, replace the rotor.

(b) Using calipers, measure the slip ring diameter.

Standard diameter: 14.4 mm (0.567 in.)
Minimum diameter: 14.0 mm (0.551 in.)

If the diameter of the slip ring is less than the minimum, replace the rotor.

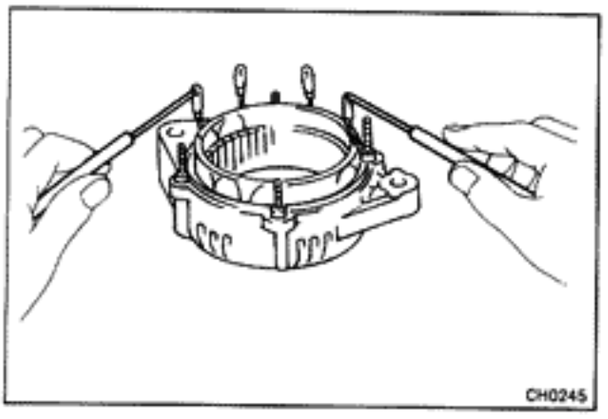

Stator

1. INSPECT STATOR FOR OPEN CIRCUIT

Using an ohmmeter, check all leads for continuity. If there is no continuity, replace the drive end frame assembly.

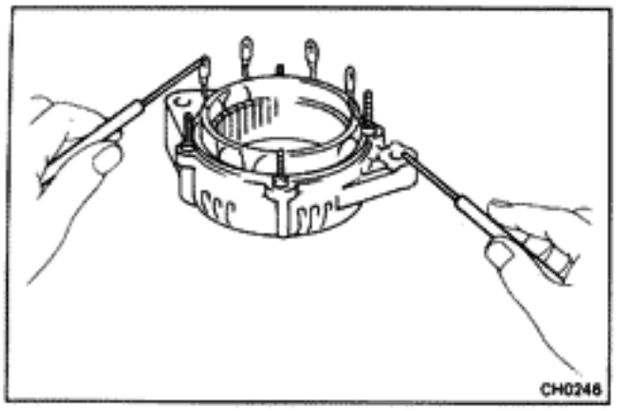

2. INSPECT THAT STATOR IS NOT GROUNDED

Using an ohmmeter, check that there is no continuity between the coil leads and drive end frame. If there is continuity, replace the drive end frame assembly.

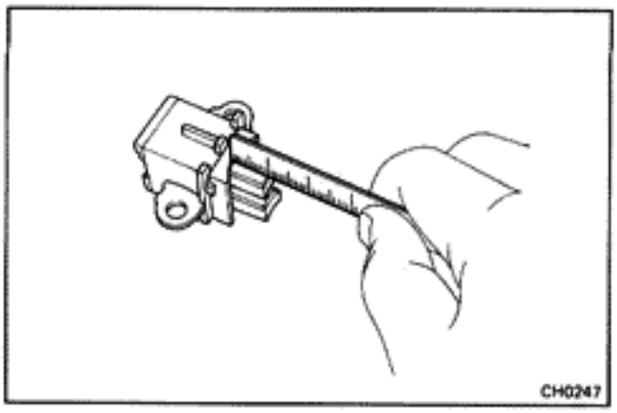

Brush and Brush Holder

1. MEASURE EXPOSED BRUSH LENGTH

Using a scale, measure the exposed brush length.

Standard exposed length: 10.5 mm (0.413 in.)
Minimum exposed length: 4.5 mm (0.177 in.)

If the exposed length is less than minimum, replace the brush.

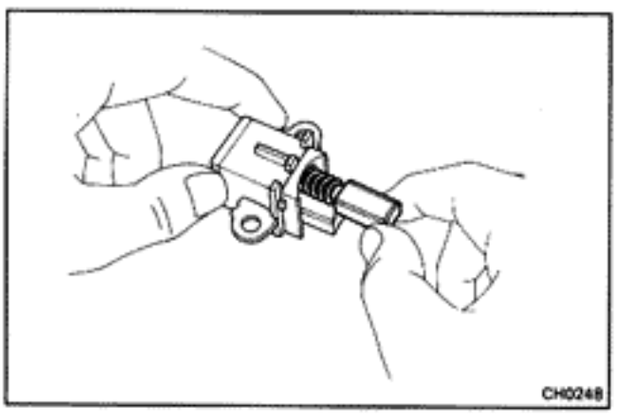

2. IF NECESSARY REPLACE BRUSHES

(a) Unsolder and remove the brush and the spring.

(b) Run the wire of the brush through the hole in the brush holder, and insert the spring and brush into the brush holder.

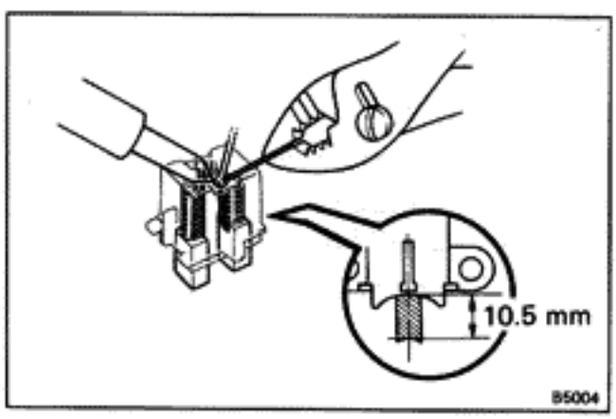

(c) Solder the brush wire to the brush holder at the exposed length.

Standard exposed length: 10.5 mm (0.413 in.)

(d) Check that the brush moves smoothly in the brush holder.

(e) Cut off the excess wire.

(f) Apply insulation paint to the soldered point.

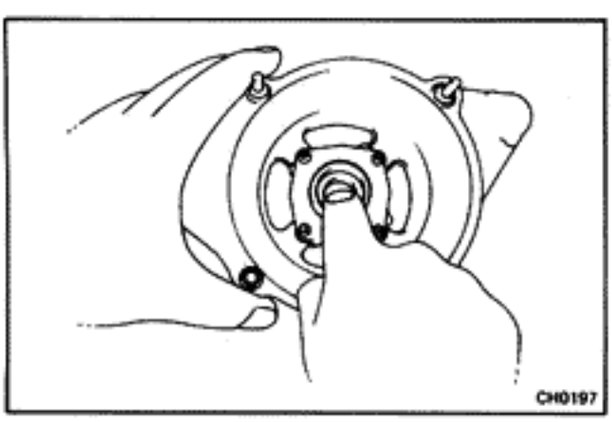

Bearings

1. INSPECT FRONT BEARING

Check that the front bearing is not rough or worn. Replace if necessary.

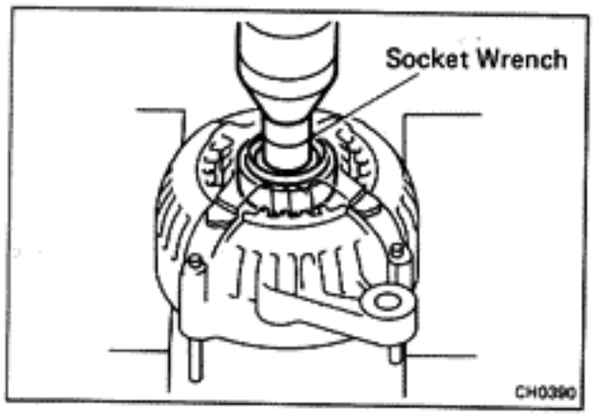

2. IF NECESSARY, REPLACE FRONT BEARING

(a) Remove the four screws and bearing retainer.

(b) Using a press and socket wrench, press out the front bearing.

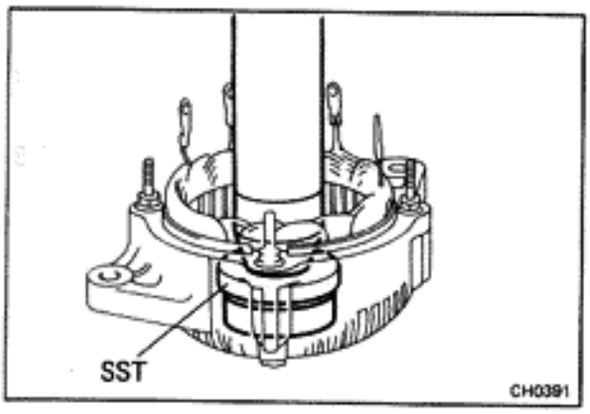

(c) Using SST, install the front bearing into the drive end frame.

SST 09608-20012 (09608-00030)

(d) Install the bearing retainer with the four screws.

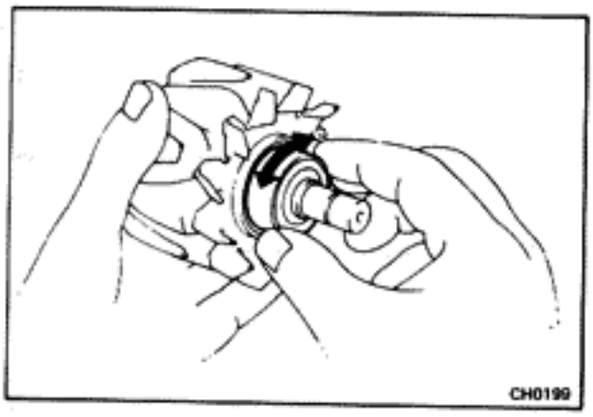

3. INSPECT REAR BEARING

Check that the rear bearing is not rough or worn. Replace if necessary.

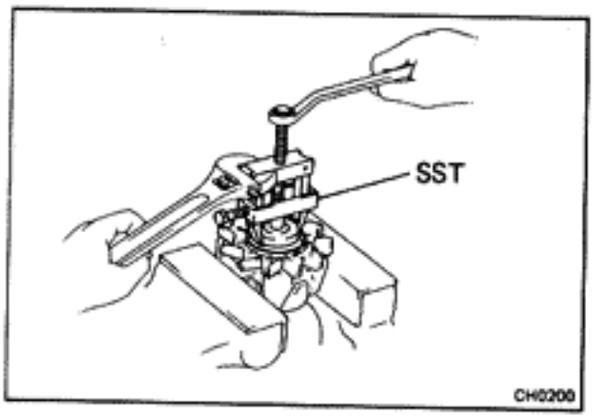

4. IF NECESSARY, REPLACE REAR BEARING

(a) Using SST, remove the rear bearing with the bearing cover from the rotor shaft.

SST 09820-00021

CAUTION: Be careful not to damage the fan.

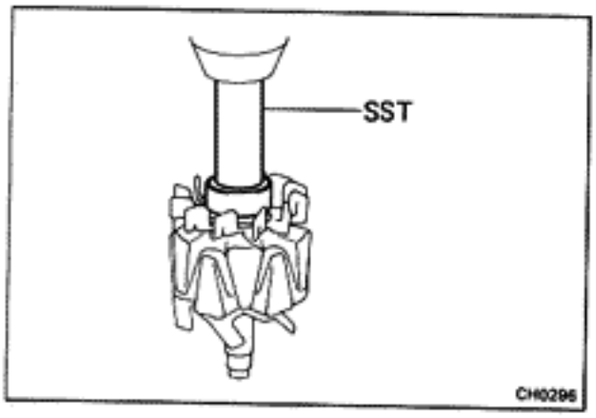

(b) Using SST and a press, press in the rear bearing and bearing cover onto the rotor shaft.

SST 09820-00030

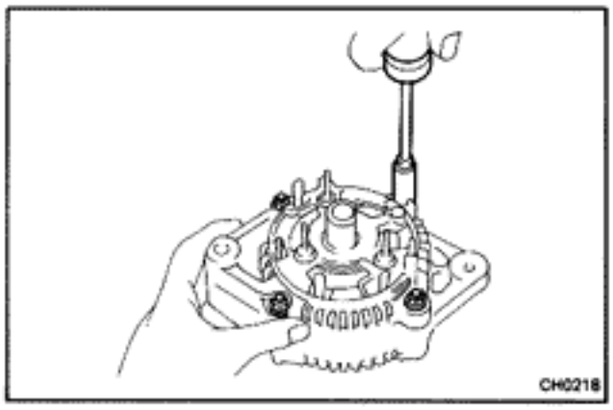

ASSEMBLY OF ALTERNATOR

(See page CH-5)

1. INSTALL ROTOR TO DRIVE END FRAME

2. INSTALL REAR END FRAME

(a) Using a plastic hammer, lightly tap the rear end frame onto the drive end frame.

(b) Install the four nuts.

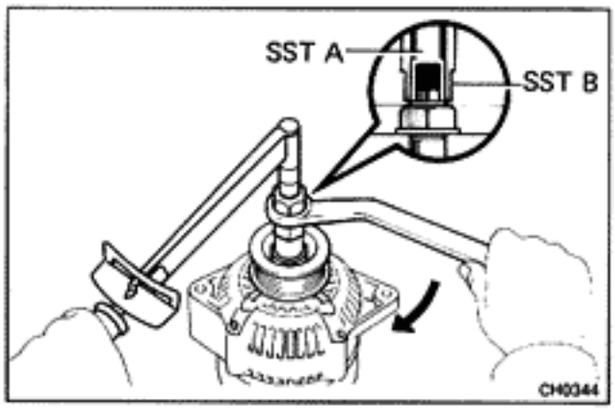

3. INSTALL PULLEY

(a) Install the pulley to the rotor shaft by tightening the pulley nut by hand.

(b) Hold SST A with a torque wrench and tighten SST B clockwise to the specified torque.

SST 09820-63010

Torque: 400 kg-cm (29 ft-lb, 39 N·m)

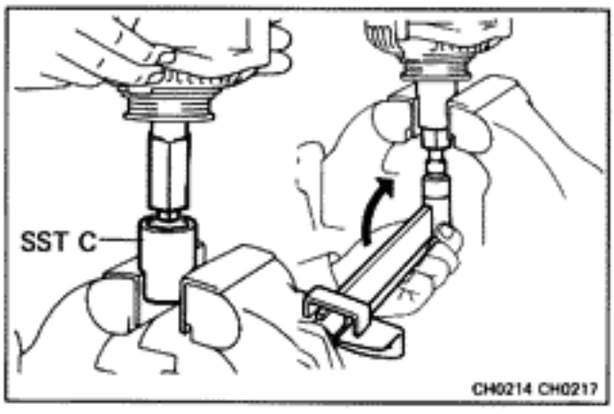

(c) Check that SST A is secured to the pulley shaft.

(d) As shown in the figure, mount SST C in a vise and then install the alternator to SST C.

(e) To torque the pulley, nut turn SST A in the direction shown in the figure.

Torque: 1,125 kg-cm (81 ft-lb, 110 N·m)

(f) Remove the alternator from SST C.

(g) Turn SST B and remove SSTs A and B.

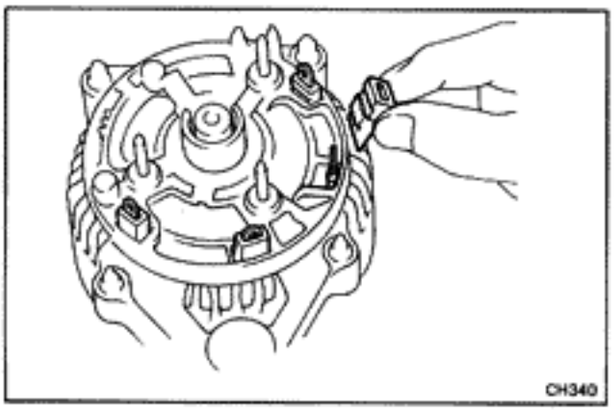

4. INSTALL RECTIFIER HOLDER

(a) Install the four rubber insulators on the lead wires.

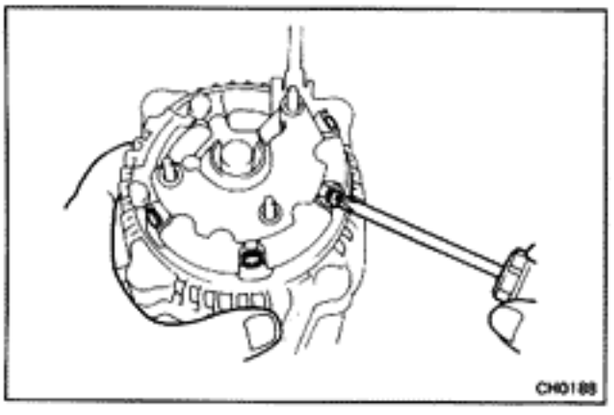

(b) Install the rectifier with four screws.

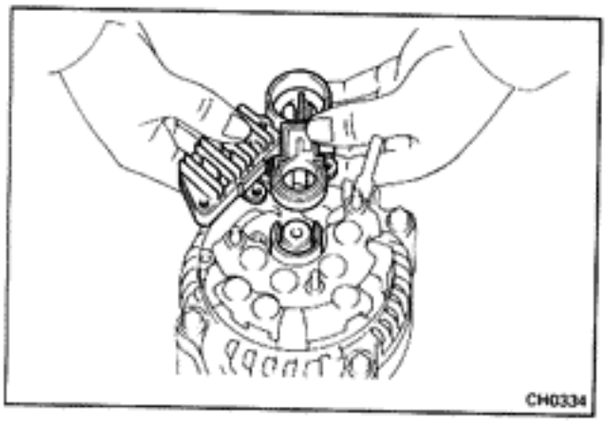

5. INSTALL BRUSH HOLDER AND IC REGULATOR

(a) Place the brush holder cover to the brush holder.

(b) Install the IC regulator and brush holder to the rear end frame horizontally as shown in the figure.

NOTE: Make sure the brush holder's cover doesn't slip to one side during installation.

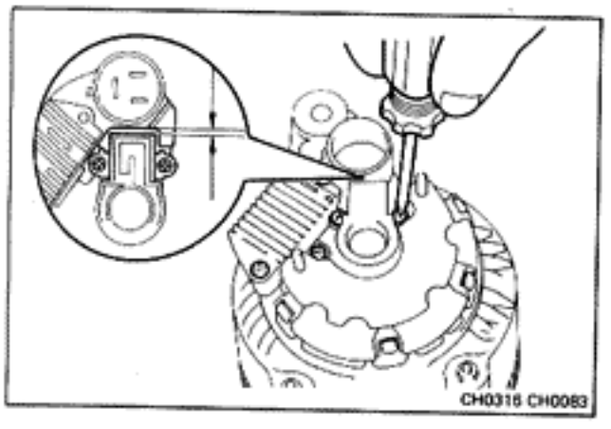

(c) Install and tighten the three screws.

NOTE: Make sure the gap between the brush holder and connector is at least 1 mm (0.04 in.).

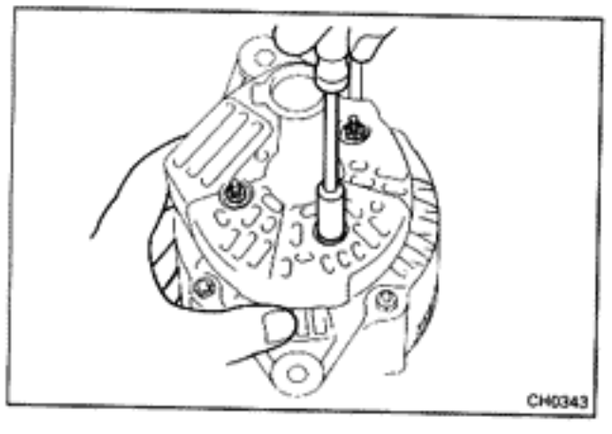

6. INSTALL REAR END COVER

(a) Install the end cover with the three nuts.

(b) Install the terminal insulator with the nut.

INSTALLATION OF ATERNATOR

1. INSTALL ALTERNATOR

Mount the alternator on the engine bracket with the pivot and adjusting lock bolts.

Do not tighten the bolts.

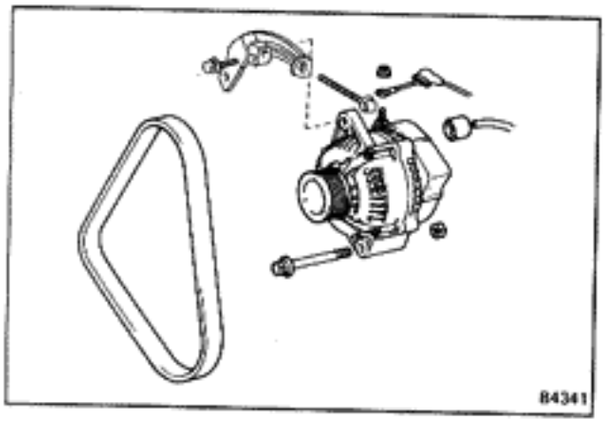

2. INSTALL DRIVE BELT

(a) Install the drive belt.

(b) Using a belt tension gauge, check the drive belt tension. (See page CH-3)

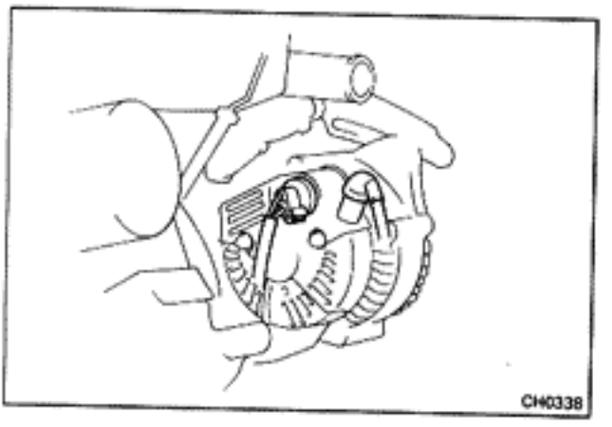

3. CONNECT WIRING TO ALTERNATOR

(a) Connect the wire to the alternator and install the nut.

(b) Connect the connector to the alternator.

4. CONNECT NEGATIVE CABLE TO BATTERY

5. PERFORM ON-VEHICLE INSPECTION

(See pages CH-2 to 4)

CLUTCH

	Page
TROUBLESHOOTING	CL-2
CHECK AND ADJUSTMENT OF CLUTCH PEDAL	CL-3
BLEEDING OF CLUTCH SYSTEM	CL-3
CLUTCH MASTER CYLINDER	CL-4
CLUTCH RELEASE CYLINDER	CL-5
CLUTCH UNIT	CL-7

TROUBLESHOOTING

Problem	Possible cause	Remedy	Page
Hard to shift or will not shift	Clutch pedal freeplay excessive	Adjust pedal freeplay	CL-3
	Air in clutch lines	Bleed clutch system	CL-3
	Clutch release cylinder faulty	Repair release cylinder	CL-5
	Clutch master cylinder faulty	Repair master cylinder	CL-4
	Clutch disc out of true, runout is excessive or lining broken	Inspect clutch disc	CL-7
	Splines on input shaft or clutch disc dirty or burred	Repair as necessary	CL-7
	Clutch pressure plate faulty	Replace pressure plate	CL-7
Transmission jumps out of gear	Clutch pilot bearing worn	Replace pilot bearing	CL-8
Clutch slips	Clutch pedal freeplay insufficient	Adjust pedal freeplay	CL-3
	Clutch disc lining oily or worn out	Inspect clutch disc	CL-7
	Pressure plate faulty	Replace pressure plate	CL-7
	Release fork binding	Inspect release fork	CL-7
Clutch grabs/chatters	Clutch disc lining oily or worn out	Inspect clutch disc	CL-7
	Pressure plate faulty	Replace pressure plate	CL-7
	Clutch diaphragm spring bent	Align clutch diaphragm	CL-7
	Engine mounts loose	Repair as necessary	
Clutch pedal spongy	Air in clutch lines	Bleed clutch system	CL-3
	Clutch release cylinder faulty	Repair release cylinder	CL-5
	Clutch master cylinder faulty	Repair master cylinder	CL-4
Clutch noisy	Loose part inside housing	Repair as necessary	
	Release bearing worn or dirty	Replace release bearing	CL-7
	Pilot bearing worn	Replace pilot bearing	CL-8
	Release fork or linkage sticks	Repair as necessary	

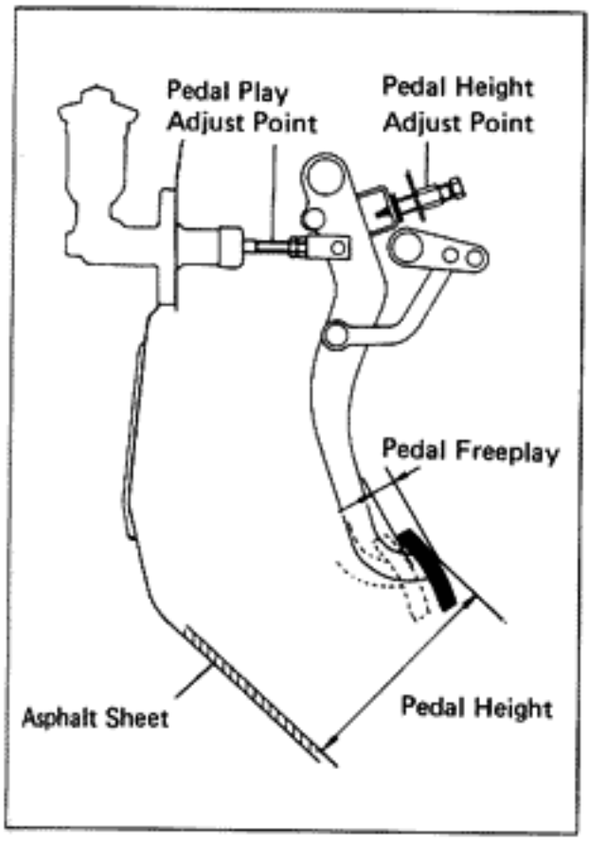

CHECK AND ADJUSTMENT OF CLUTCH PEDAL

1. CHECK THAT PEDAL HEIGHT IS CORRECT AS SPECIFIED

   Pedal height: 154 – 164 mm (6.06 – 6.46 in.)

2. IF NECESSARY, ADJUST PEDAL HEIGHT

   (a) Loosen the lock nut and turn the adjusting bolt until the height is correct.

   (b) Tighten the lock nut.

   (c) After adjusting the pedal height, check the pedal freeplay.

3. CHECK THAT PEDAL FREEPLAY IS CORRECT AS SPECIFIED

   Push in on the pedal until initial clutch resistance is felt.

   Pedal freeplay: 5 – 15 mm (0.20 – 0.59 in.)
   [Push rod play at pedal: 1 – 5 mm (0.04 – 0.20 in.)]

4. IF NECESSARY, ADJUST PEDAL FREEPLAY

   (a) Loosen the lock nut and turn the push rod until the freeplay is correct.

   (b) Tighten the lock nut.

   (c) After adjusting the pedal freeplay, check the pedal height.

5. CHECK PEDAL OPERATION

   While gently depressing and releasing the pedal, check that engagement and disengagement is smooth.

   NOTE: With a pedal stroke of 125 – 135 mm (4.92 – 5.31 in.), the pedal should return in 3 – 4 seconds.

BLEEDING OF CLUTCH SYSTEM

NOTE: If any work is done on the clutch system or if air is suspected in the clutch lines, bleed the system of air.

CAUTION: Do not let brake fluid remain on a painted surface. Wash it off immediately.

1. FILL CLUTCH RESERVOIR WITH BRAKE FLUID

   Check the reservoir frequently. Add fluid if necessary.

2. CONNECT VINYL TUBE TO BLEEDER PLUG

   Insert the other end of the tube in a half-full container of brake fluid.

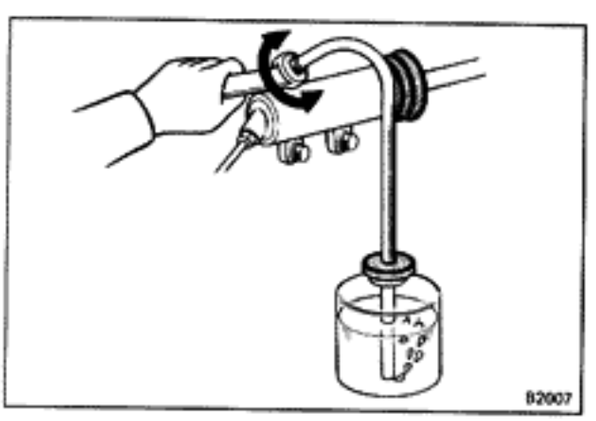

3. BLEED CLUTCH LINE

   (a) Slowly pump the clutch pedal several times.

   (b) While pressing on the pedal, loosen the bleeder plug until the fluid starts to run out. Then close the bleeder plug.

   (c) Repeat this procedure until there are no more air bubbles in the fluid.

CLUTCH MASTER CYLINDER

COMPONENTS

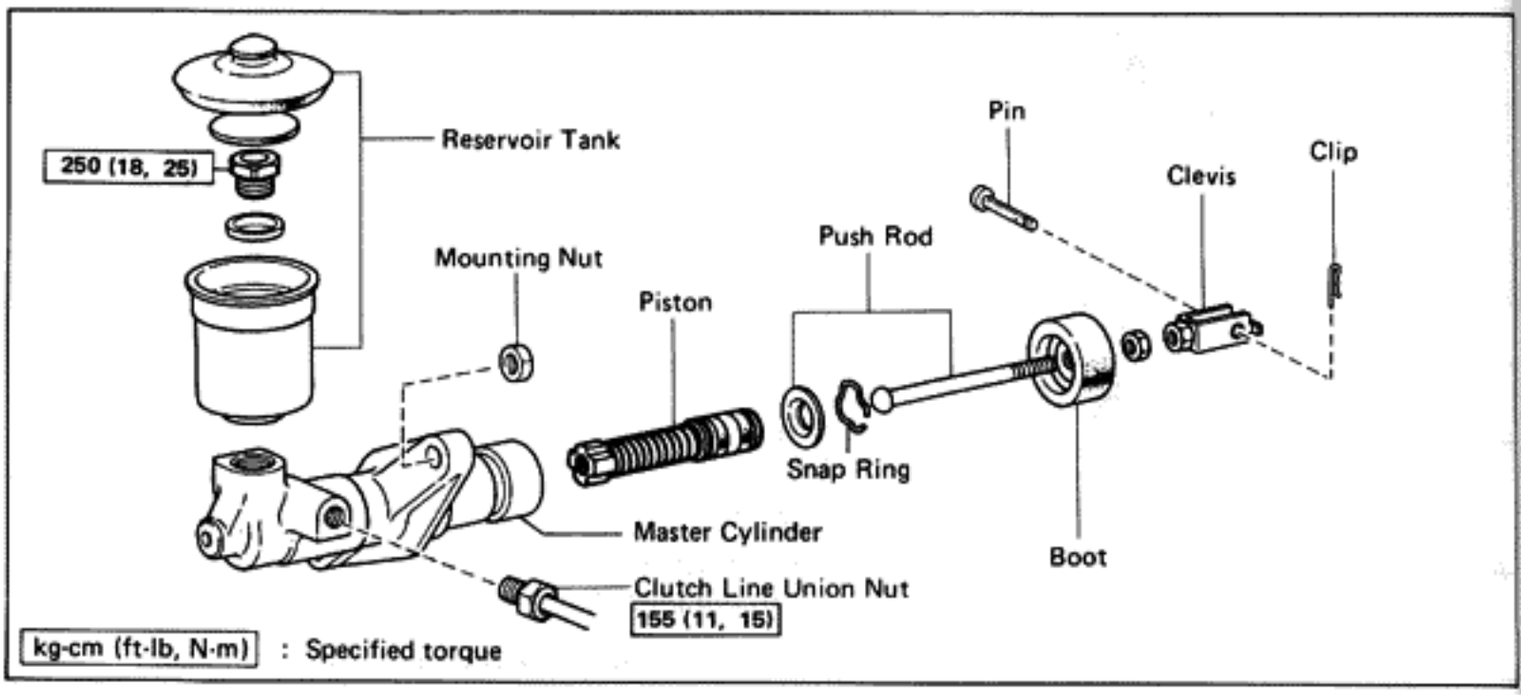

REMOVAL OF MASTER CYLINDER

1. REMOVE CLEVIS PIN AND CLIP
2. DISCONNECT CLUTCH LINE UNION
   Using SST, disconnect the union nut.
   SST 09751-36011
3. REMOVE MASTER CYLINDER
   (a) Remove the mounting nut and bolt.
   (b) Pull out the master cylinder.

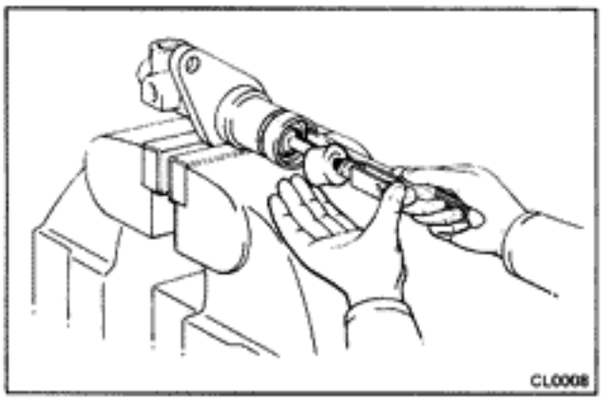

DISASSEMBLY OF MASTER CYLINDER

1. REMOVE RESERVOIR TANK
   Remove the hold-down bolt and pull off the reservoir tank.
2. REMOVE PUSH ROD AND PISTON
   (a) Pull back the boot and, using a screwdriver, remove the snap ring.
   (b) Pull out the push rod, washer and piston.

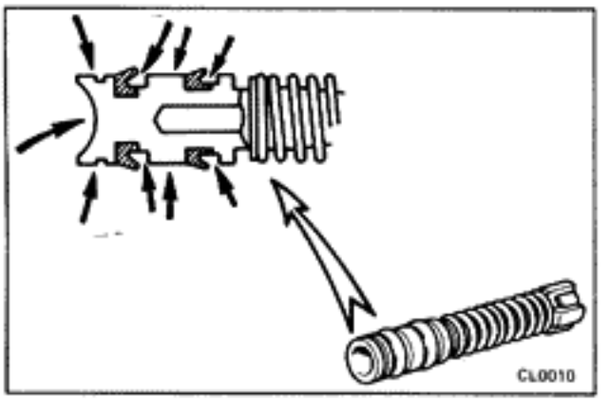

ASSEMBLY OF MASTER CYLINDER

1. COAT PARTS WITH LITHIUM SOAP BASE GLYCOL GREASE, AS SHOWN
2. INSERT PISTON INTO CYLINDER
3. INSTALL PUSH ROD ASSEMBLY WITH SNAP RING
4. INSTALL RESERVOIR TANK
   Torque: 250 kg-cm (18 ft-lb, 25 N·m)

INSTALLATION OF MASTER CYLINDER

(See page CL-4)

1. INSTALL MASTER CYLINDER

   Install the mounting nut and bolt and torque the nut and bolt.

   Torque: 250 kg-cm (18 ft-lb, 25 N·m)

2. CONNECT CLUTCH LINE UNION

   Using SST, connect the union.

   SST 09751-36011

   Torque: 155 kg-cm (11 ft-lb, 15 N·m)

3. CONNECT PUSH ROD AND INSTALL PIN

   Install a clip in the push rod pin.

4. BLEED SYSTEM AND ADJUST CLUTCH PEDAL

   (See page CL-3)

CLUTCH RELEASE CYLINDER

COMPONENTS

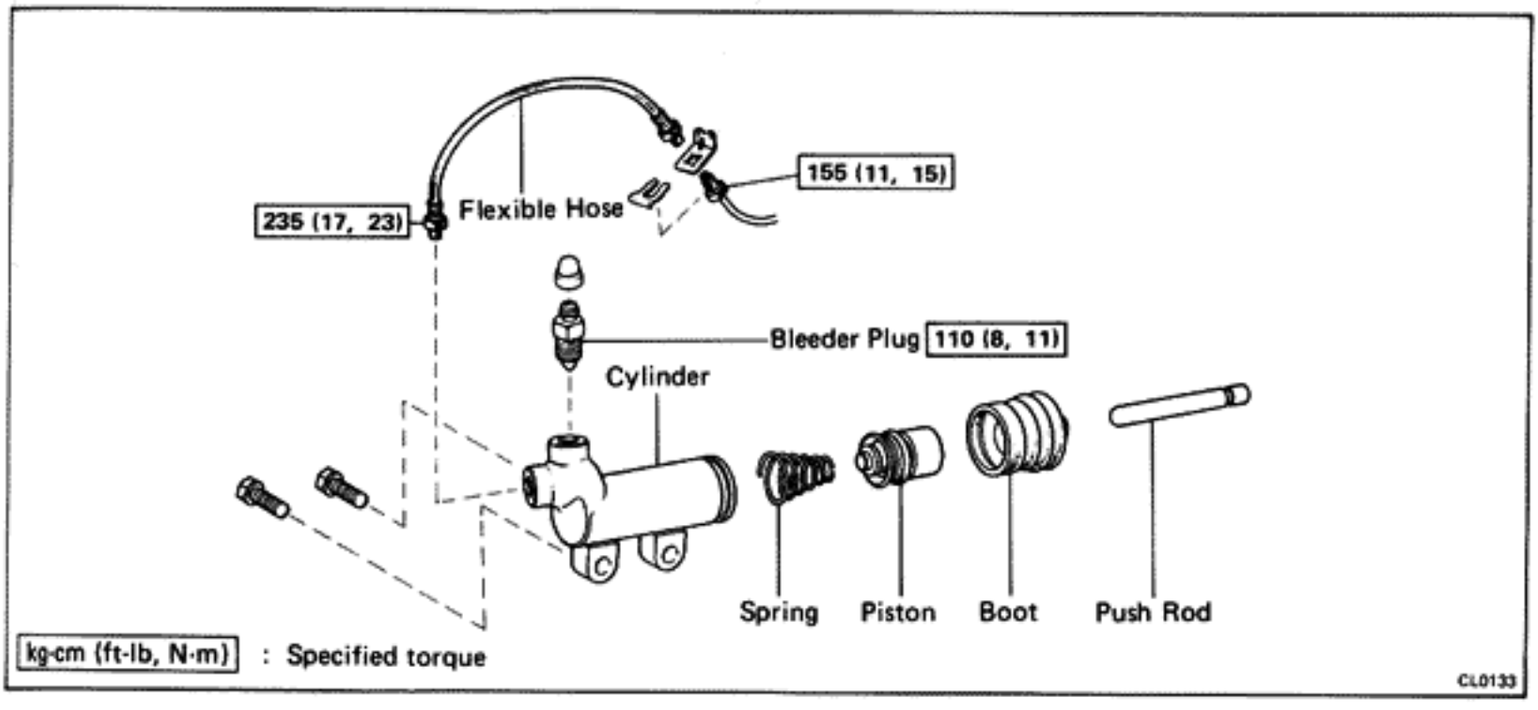

REMOVAL OF RELEASE CYLINDER

1. DISCONNECT FLEXIBLE HOSE

   Using SST, disconnect the union.

   SST 09751-36011

2. REMOVE RELEASE CYLINDER

   (a) Remove the two bolts.

   (b) Pull out the release cylinder.

DISASSEMBLY OF RELEASE CYLINDER

(See page CL-5)

1. PULL OUT PUSH ROD
2. REMOVE BOOT
3. PULL OUT PISTON AND SPRING

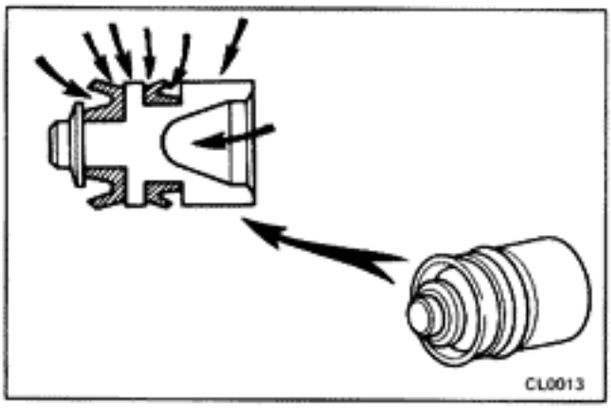

ASSEMBLY OF RELEASE CYLINDER

(See page CL-5)

1. COAT PISTON WITH LITHIUM SOAP BASE GLYCOL GREASE, AS SHOWN
2. INSERT SPRING AND PISTON INTO CYLINDER
3. INSTALL BOOT AND INSERT PUSH ROD

INSTALLATION OF RELEASE CYLINDER

(See page CL-5)

1. INSTALL RELEASE CYLINDER
2. CAREFULLY CONNECT FLEXIBLE HOSE
3. BLEED CLUTCH SYSTEM (See page CL-3)

CLUTCH UNIT

COMPONENTS

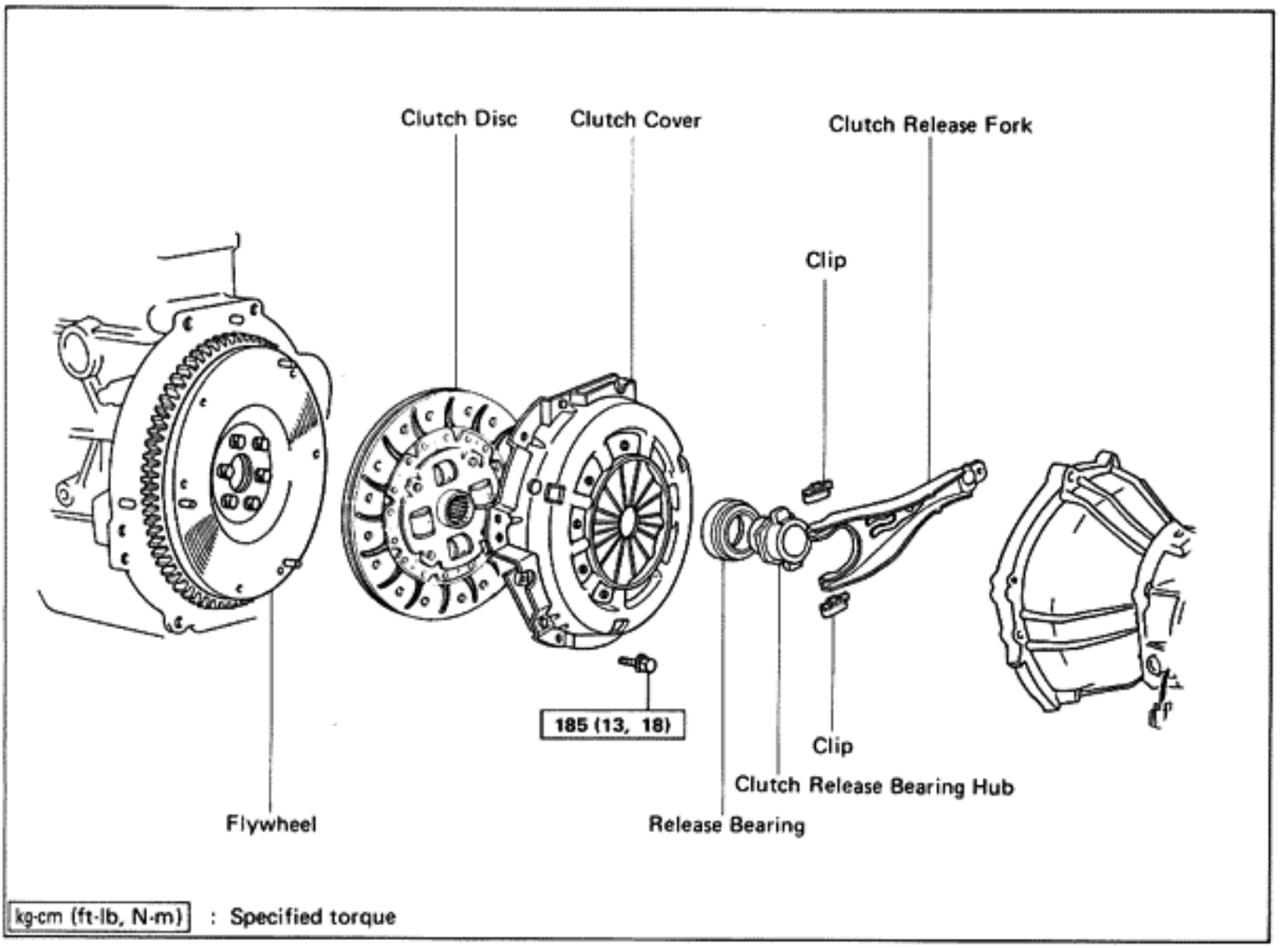

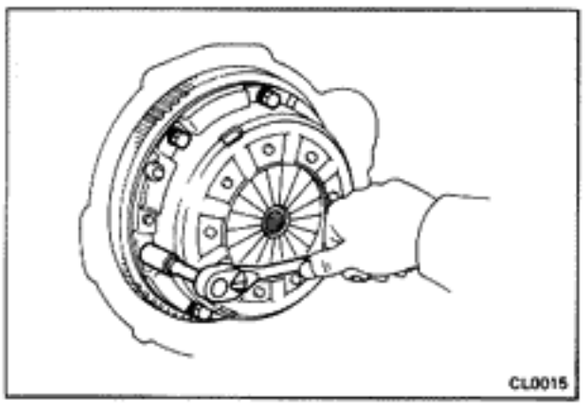

REMOVAL OF CLUTCH UNIT

1. **REMOVE TRANSMISSION (See pages MT-3, 4)**

   NOTE: Do not drain the transmission oil.

2. **REMOVE CLUTCH COVER AND DISC**

   (a) Loosen the set bolts one turn at a time until spring tension is released.

   (b) Remove the set bolts, and pull off the clutch assembly.

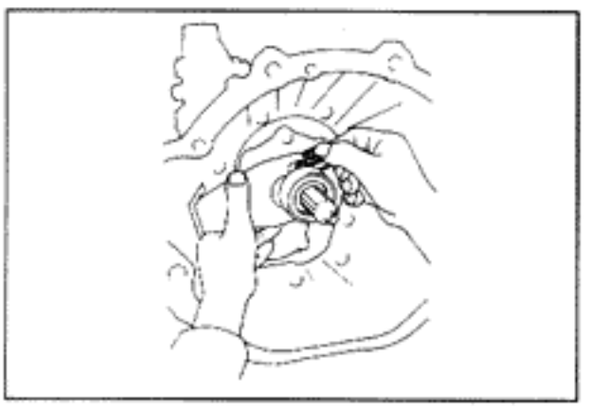

3. **REMOVE BEARING, HUB AND FORK FROM TRANSMISSION**

   (a) Remove the clips, and pull off the bearing and hub.

   (b) Remove the fork and boot.

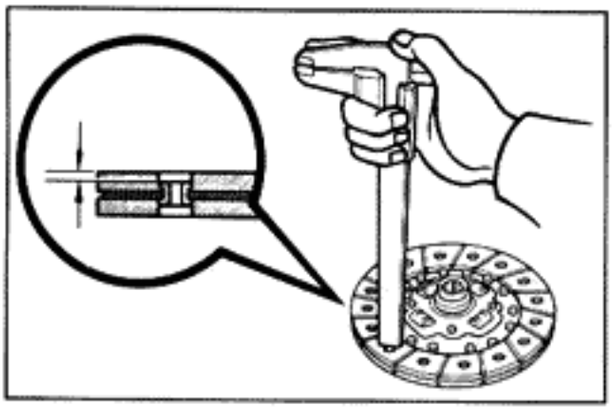

INSPECTION OF CLUTCH PARTS

1. INSPECT CLUTCH DISC FOR WEAR OR DAMAGE

Using calipers, measure the rivet head depth.

Minimum rivet depth: 0.3 mm (0.012 in.)

If a problem is found, repair or replace the clutch disc.

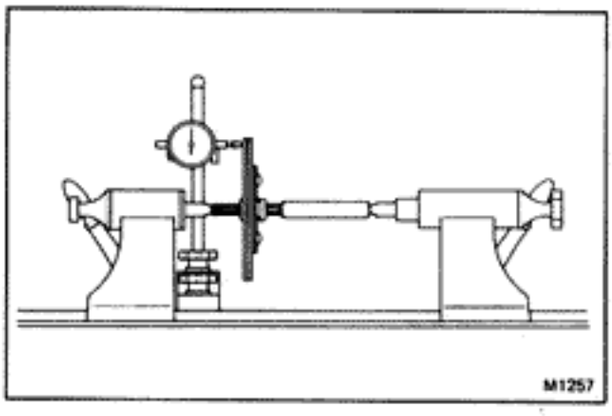

2. INSPECT CLUTCH DISC RUNOUT

Using a dial indicator, check the disc runout.

Maximum runout: 0.8 mm (0.031 in.)

If runout is excessive, replace the disc.

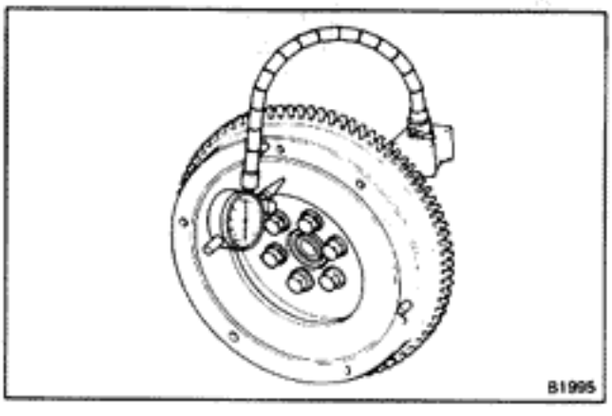

3. INSPECT FLYWHEEL RUNOUT

Using a dial indicator, check the flywheel runout.

Maximum runout: 0.2 mm (0.008 in.)

If runout is excessive, repair or replace the flywheel.

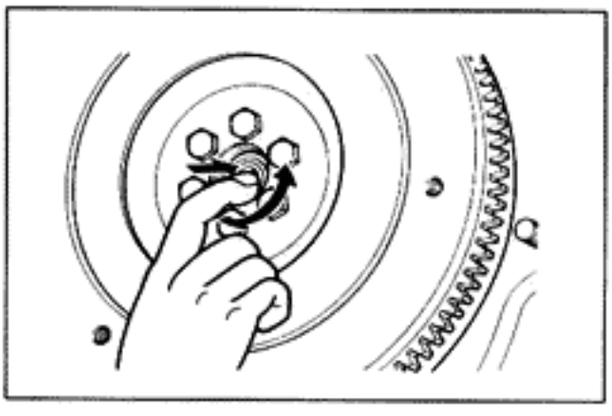

4. INSPECT PILOT BEARING

Turn the bearing by hand while applying force in the rotating direction.

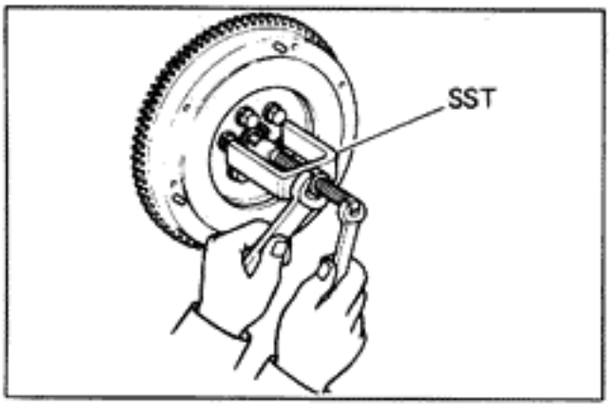

5. IF NECESSARY, REPLACE PILOT BEARING

(a) Using SST, remove the pilot bearing.

SST 09303-35011

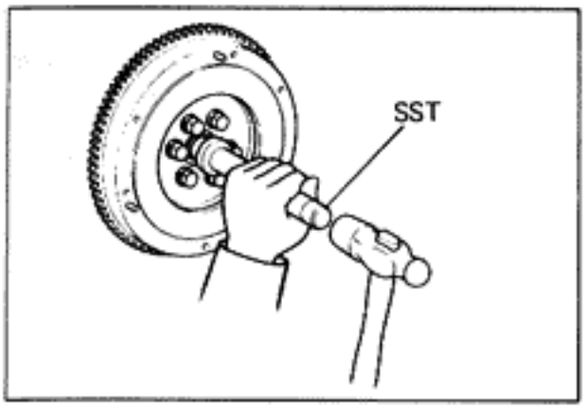

(b) Using SST, install the pilot bearing.

SST 09304-30012

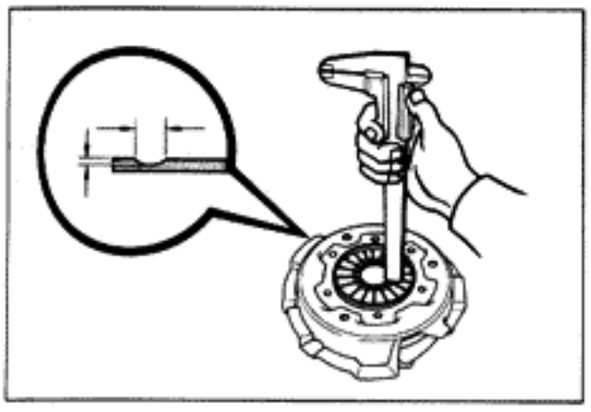

6. INSPECT DIAPHRAGM SPRING FOR WEAR

Using calipers, measure the diaphragm spring for depth and width of wear.

Limit: Depth 0.6 mm (0.024 in.)
Width 5.0 mm (0.197 in.)

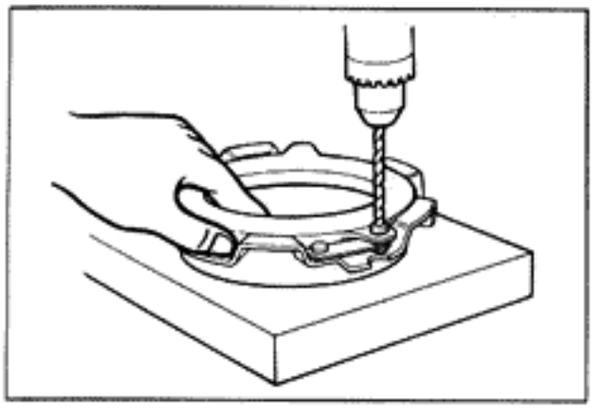

7. IF NECESSARY, REPLACE PRESSURE PLATE

(a) Drill out the rivet heads.

(b) Using a punch, drive out the rivets.

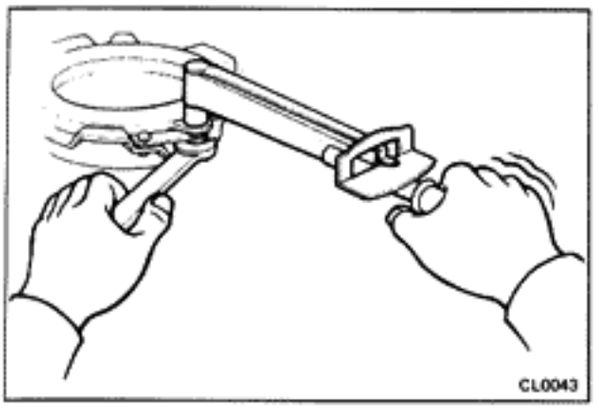

(c) Install a new pressure plate with special pressure plate bolts and nuts. Torque the nuts.

Torque: 250 kg-cm (18 ft-lb, 25 N-m)

(d) Stake the nuts.

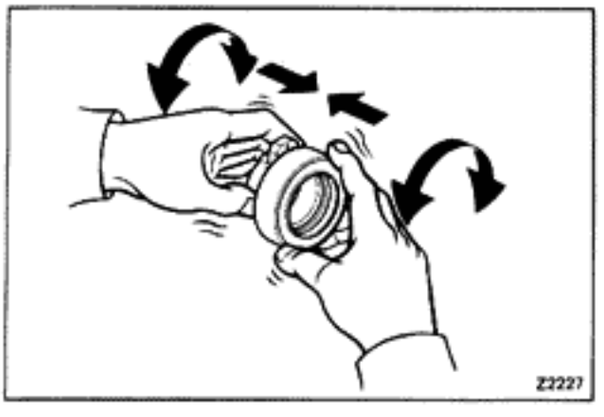

8. INSPECT RELEASE BEARING

Turn the bearing by hand while applying force in the axial direction.

NOTE: The bearing is permanently lubricated and requires no cleaning or lubrication.

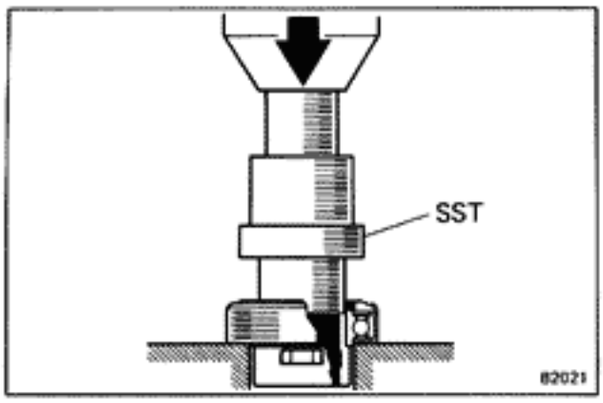

9. IF NECESSARY, REPLACE RELEASE BEARING

(a) Using a press and SST, press the release bearing from the hub.

SST 09315-00010

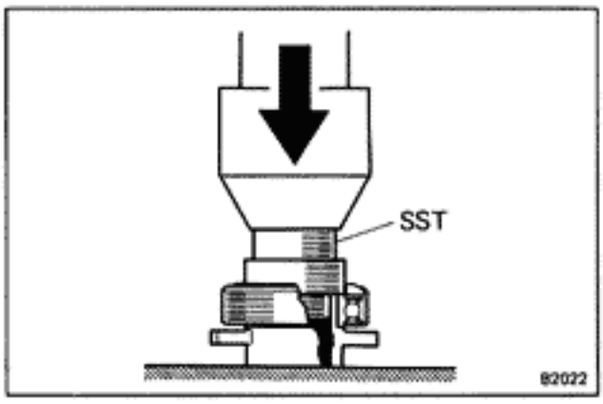

(b) Using a press and SST, press a new release bearing into the hub.

SST 09315-00010

(c) After installing the bearing, check that there is no drag on the bearing when it is turned under pressure.

INSTALLATION OF CLUTCH UNIT

(See page CL-7)

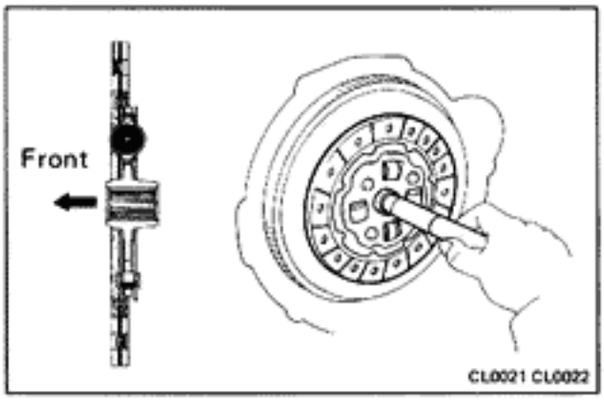

1. INSTALL DISC ON FLYWHEEL

Using SST, install the disc on the flywheel.

SST 09301-20020

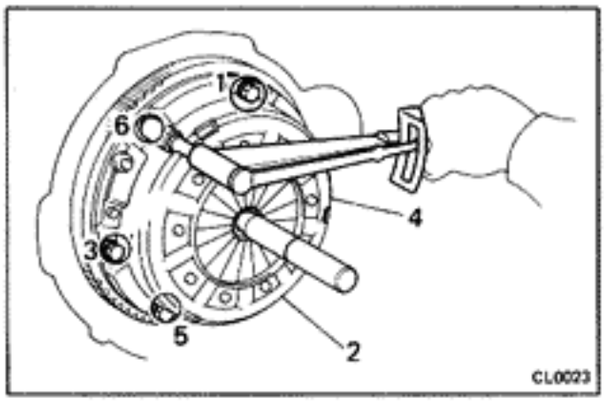

2. INSTALL CLUTCH COVER

Tighten the bolts evenly and gradually. Make several passes around the cover until the cover is snug. Torque the bolts.

Torque: 185 kg-cm (13 ft-lb, 18 N-m)

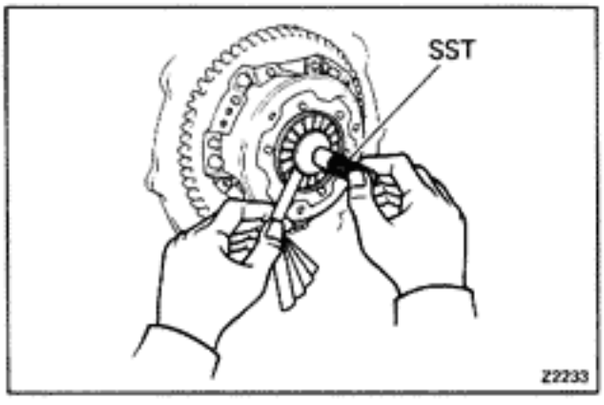

3. CHECK DIAPHRAGM SPRING TIP ALIGNMENT

Using a feeler gauge and SST, measure the gap between the spring tips and the tool.

SST 09302-30031

Maximum gap: 0.5 mm (0.020 in.)

If gap is excessive, adjust as follows.

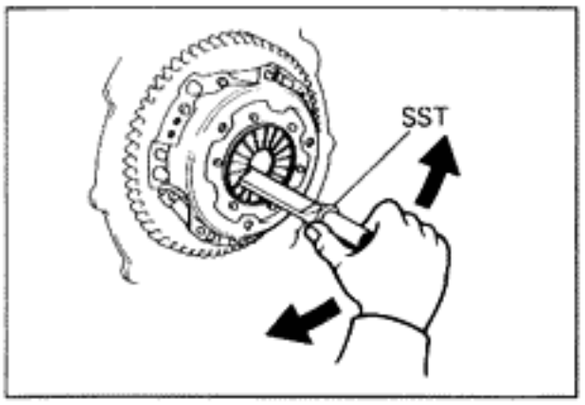

4. **IF NECESSARY, ADJUST SPRINGS**

Using SST, bend the springs until alignment is correct.

SST 09333-00012

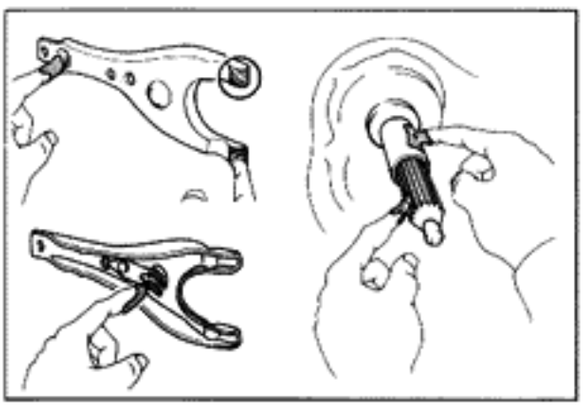

5. **APPLY MOLYBDENUM DISULPHIDE LITHIUM BASE GREASE (NLGI NO.2) OR MP GREASE**

(a) Apply molybdenum disulphide lithium base grease to the following parts:

- Release fork and hub contact point
- Release fork and push rod contact point
- Release fork pivot point
- Clutch disc spline
- Release bearing hub inside groove

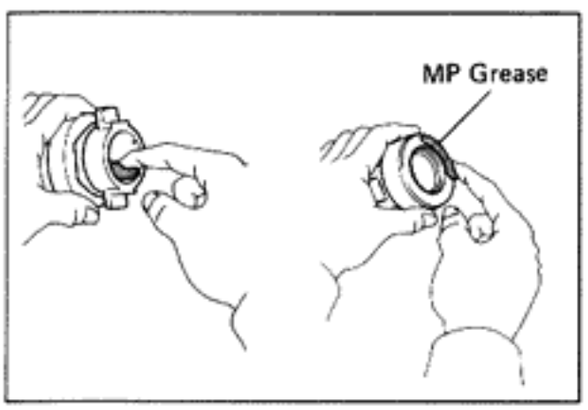

(b) Apply MP grease to the front of the release bearing.

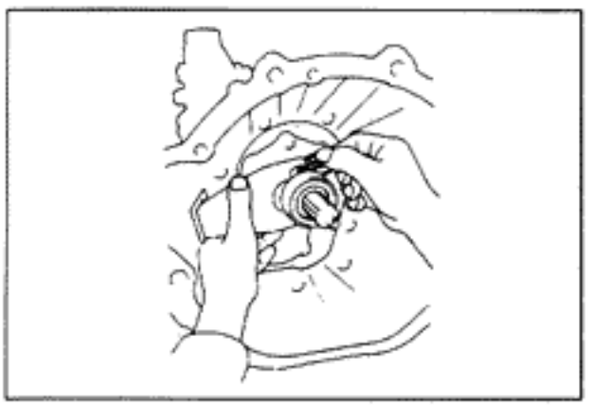

6. **INSTALL BOOT, FORK, HUB AND BEARING ON TRANSMISSION**

7. **INSTALL TRANSMISSION** **(See pages MT-23, 24)**

MANUAL TRANSMISSION

	Page
TROUBLESHOOTING	MT-2
W58 TRANSMISSION	MT-3
Removal of Transmission	MT-3
Components	MT-5
Disassembly of Transmission	MT-7
Inspection of Transmission Components	MT-14
Assembly of Transmission	MT-21
Installation of Transmission	MT-34

MT

TROUBLESHOOTING

Problem	Possible cause	Remedy	Page
Hard to shift or will not shift	Splines on input shaft dirty or burred Transmission faulty	Repair as necessary Disassemble and inspect transmission	MT-3 MT-3
Transmission jumps out of gear	Transmission faulty	Disassemble and inspect transmission	MT-3

W58 TRANSMISSION

REMOVAL OF TRANSMISSION

1. **REMOVE NEGATIVE BATTERY TERMINAL WIRE**
2. **DRAIN COOLANT FROM RADIATOR UPPER TANK**
3. **REMOVE UPPER HOSE FROM RADIATOR**

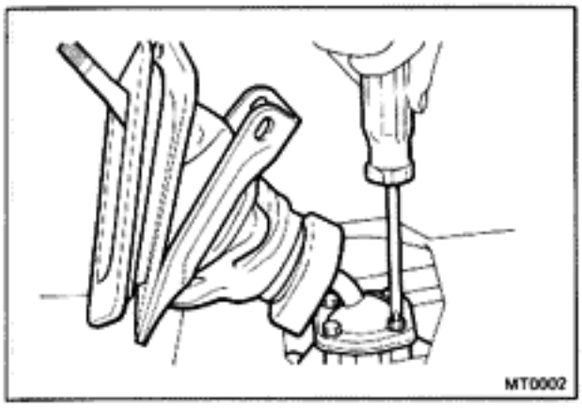

4. **REMOVE CONSOLE BOX**
5. **REMOVE SHIFT LEVER FROM INSIDE OF VEHICLE**

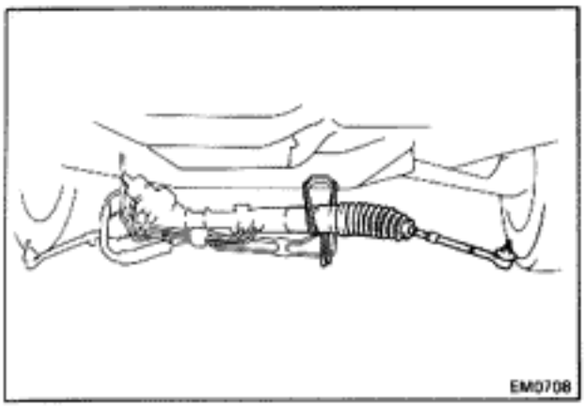

6. **RAISE VEHICLE AND DRAIN TRANSMISSION OIL**

   CAUTION: Be sure the vehicle is securely supported.

7. **REMOVE STEERING GEAR HOUSING**

   Remove the steering gear housing without disconnecting return and pressure tube, then suspend it.

   (See page SR-27)

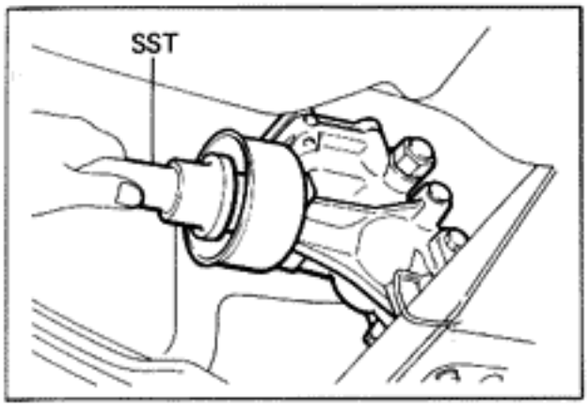

8. **REMOVE PROPELLER SHAFT**

   Remove the propeller shaft and insert SST into the extension housing.

   SST 09325-20010

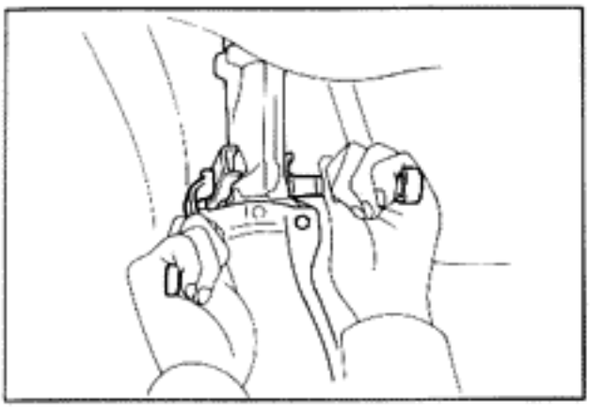

9. **REMOVE EXHAUST PIPE CLAMP BOLT FROM STIFFENER PLATE**

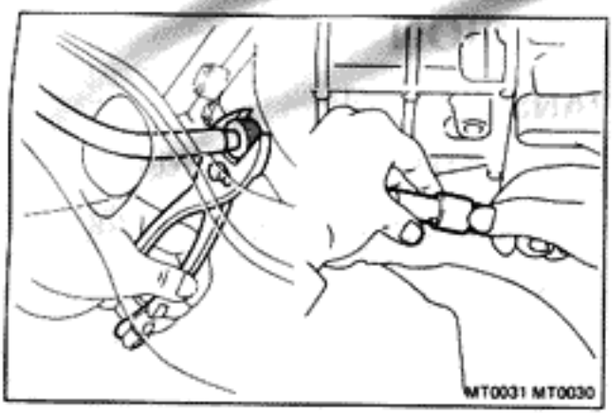

10. REMOVE SPEEDOMETER CABLE

11. DISCONNECT BACK-UP LIGHT SWITCH CONNECTOR

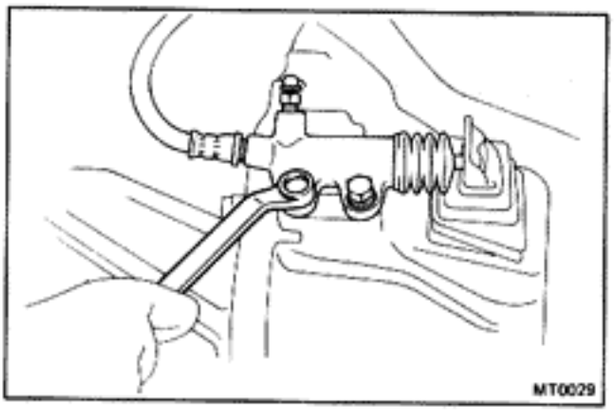

12. REMOVE CLUTCH RELEASE CYLINDER

13. REMOVE STARTER

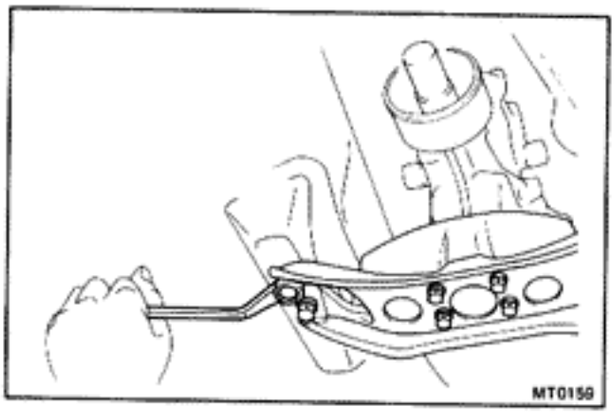

14. JACK UP TRANSMISSION SLIGHTLY

Raise the transmission enough to remove the weight from the rear support.

15. REMOVE ENGINE REAR MOUNTING

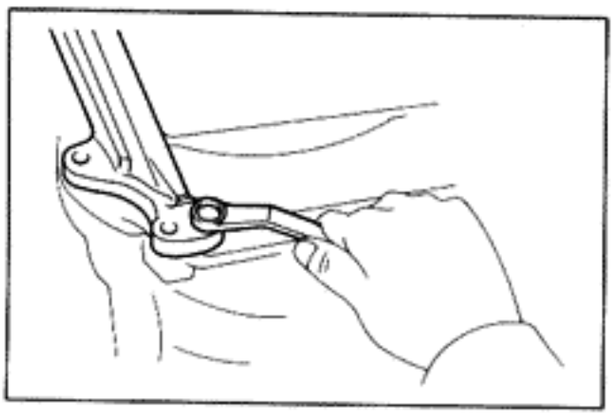

16. REMOVE TRANSMISSION ASSEMBLY

Pull out the transmission down and toward the rear.

COMPONENTS

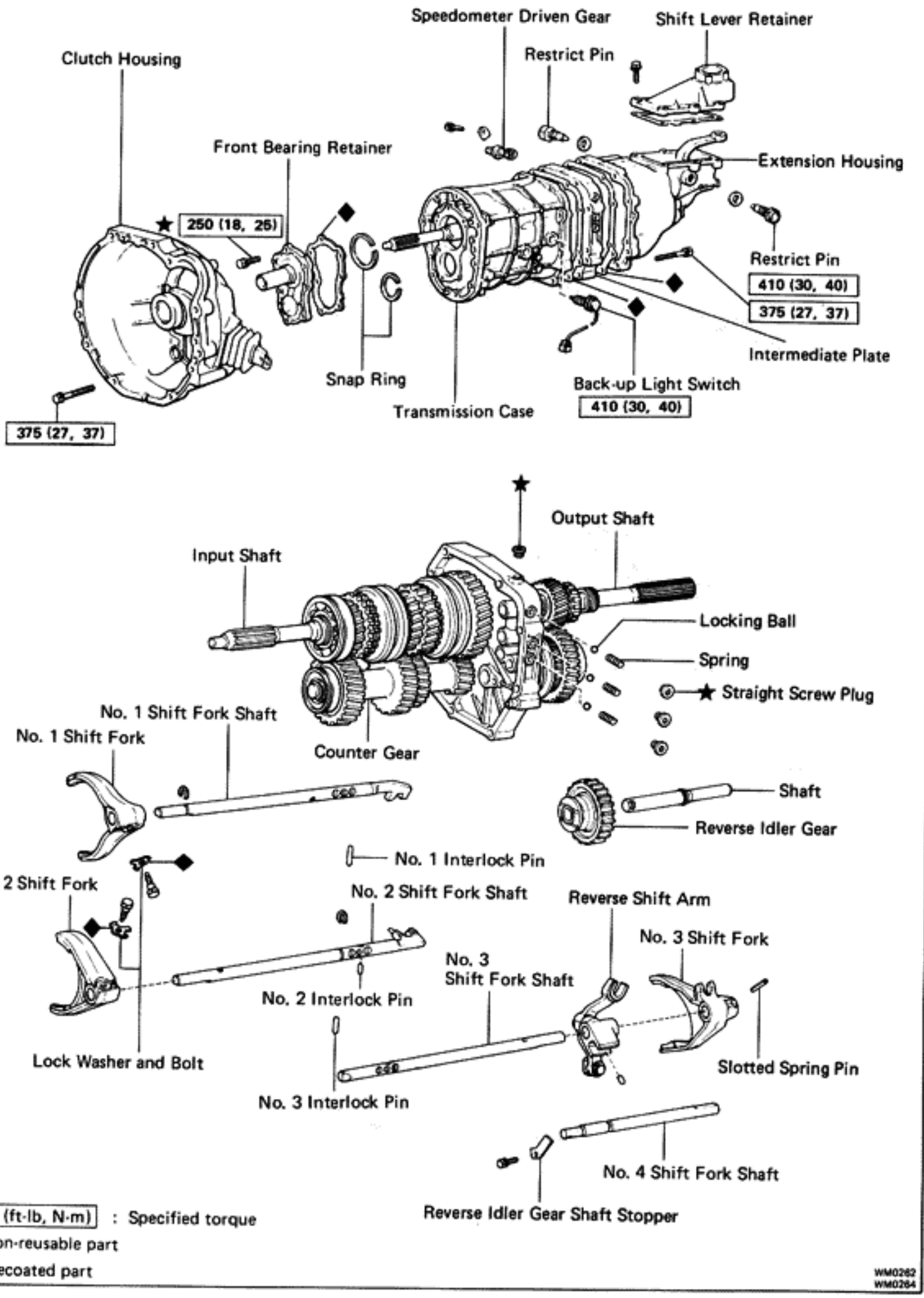

kg-cm (ft-lb, N-m) : Specified torque

♦ Non-reusable part

★ Precoated part

WM0262
WM0264

COMPONENTS (Cont'd)

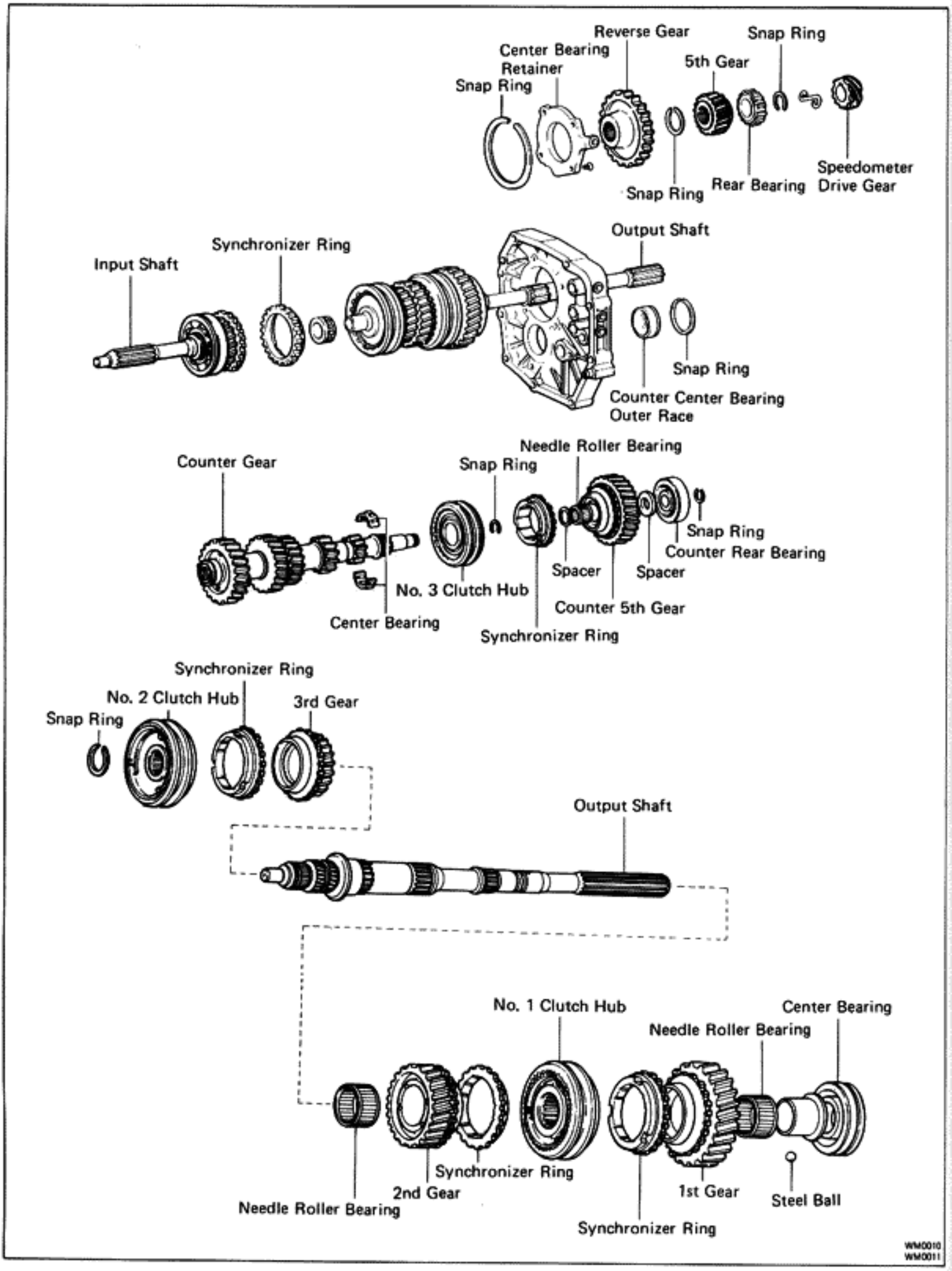

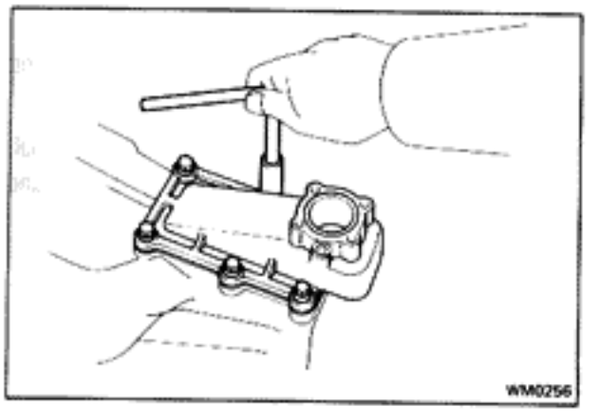

DISASSEMBLY OF TRANSMISSION

(See pages MT-5, 6)

1. **REMOVE BACK-UP LIGHT SWITCH, SPEEDOMETER DRIVEN GEAR, SHIFT LEVER RETAINER AND RESTRICT PINS**

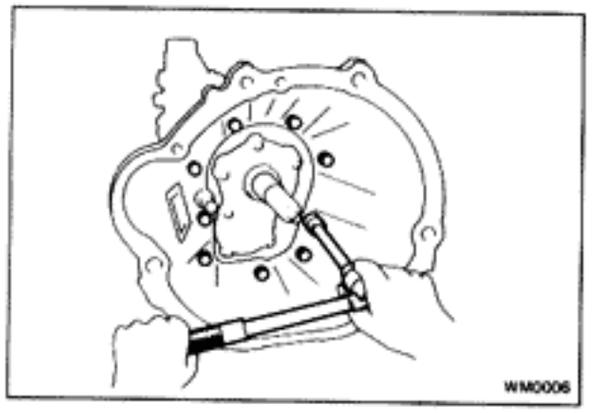

2. **REMOVE CLUTCH HOUSING FROM TRANSMISSION CASE**

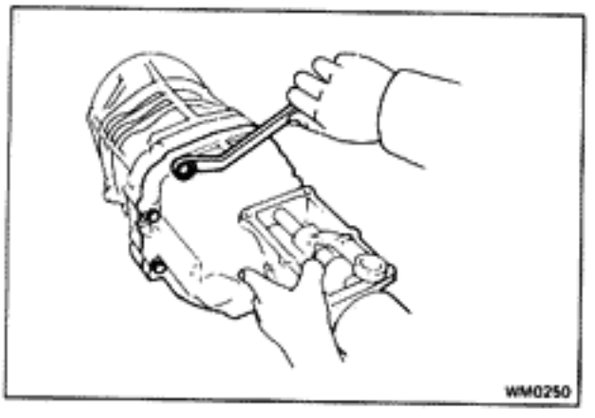

3. **REMOVE EXTENSION HOUSING**
   (a) Remove the shift lever housing set bolt.
   (b) Remove the nine bolts.
   (c) Using a plastic hammer, tap the extension housing.
   (d) Disengage the shift and select lever from the shift head.
   (e) Pull out the extension housing.

   NOTE: Leave the gasket attached to the intermediate plate.

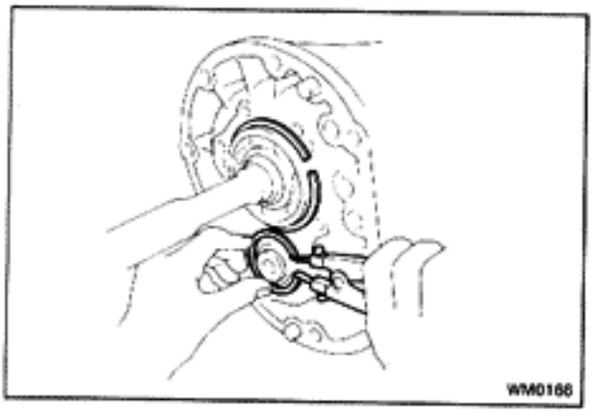

4. **REMOVE FRONT BEARING RETAINER AND BEARING SNAP RINGS**

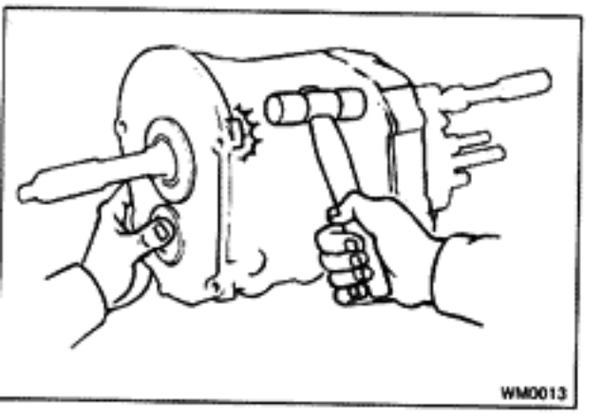

5. **SEPARATE INTERMEDIATE PLATE FROM TRANSMISSION CASE**
   (a) Using a plastic hammer, carefully tap the transmission case.
   (b) Pull the transmission case from the intermediate plate.

   NOTE: Leave the gasket attached to the intermediate plate.

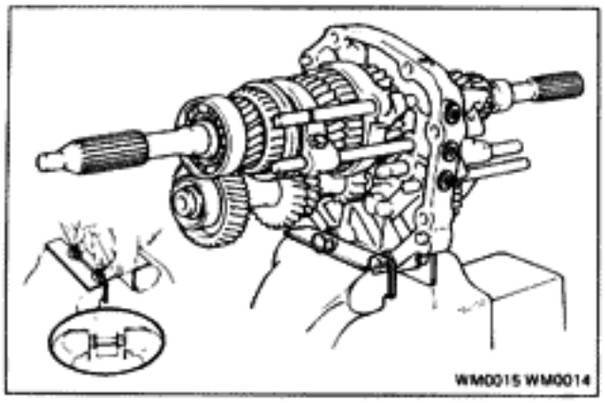

6. MOUNT INTERMEDIATE PLATE IN VISE

(a) Use two long clutch housing bolts, plate washers and suitable nuts as shown.

CAUTION: Install the plate washers in reverse of normal. Increase or decrease plate washers so that the bolt tip and the front tip surface of the nut are aligned.

(b) Mount the intermediate plate in a vise.

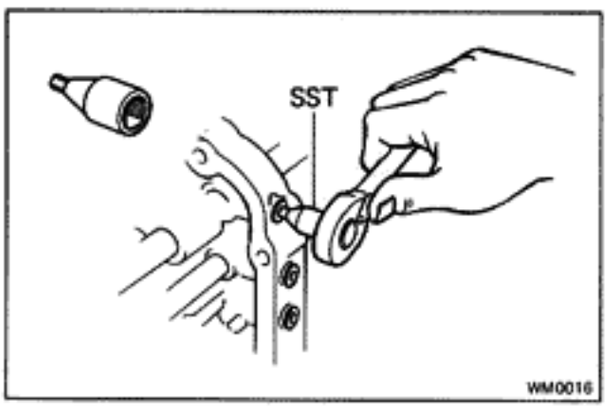

7. REMOVE LOCKING BALL AND SPRING

(a) Using SST, remove the four plugs.

SST 09313-30021

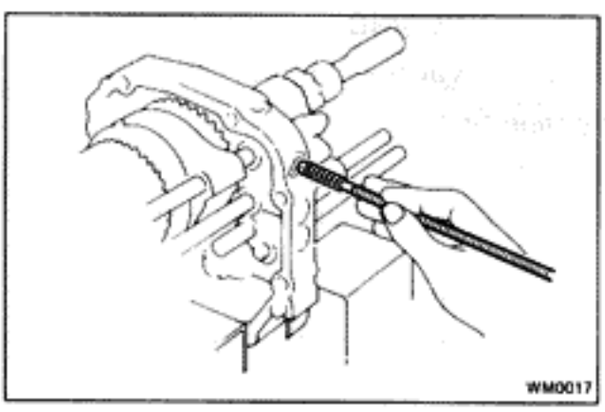

(b) Using a magnetic finger, remove the three springs and balls.

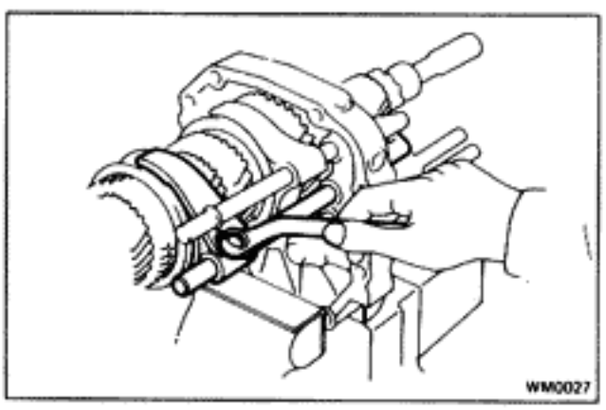

8. REMOVE SHIFT FORKS, SHIFT FORK SHAFTS AND REVERSE IDLER GEAR

(a) Pry out the lock washers of No. 1 and No. 2 shift fork, and remove the two set bolts.

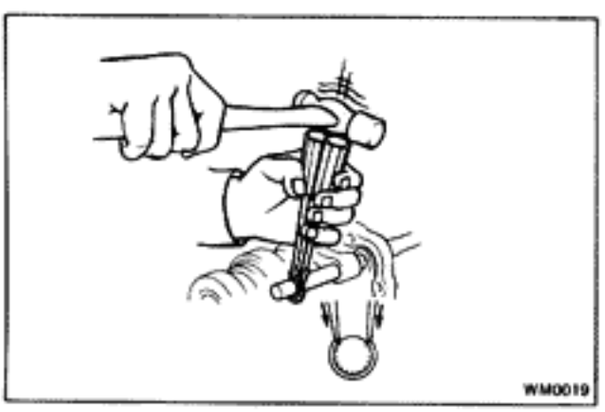

(b) Using two screwdrivers and a hammer, tap out the two snap rings of No. 1 and No. 2 fork shafts.

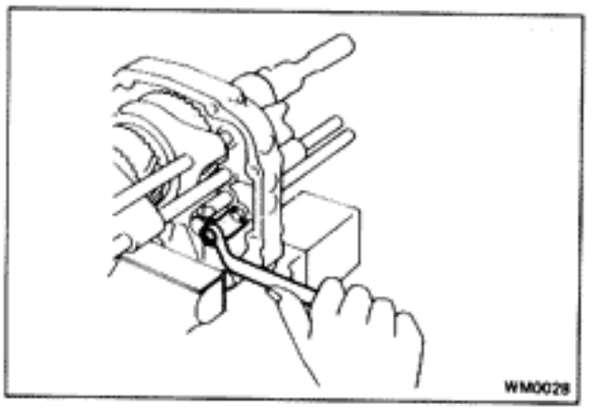

(c) Remove the reverse idler gear stopper.

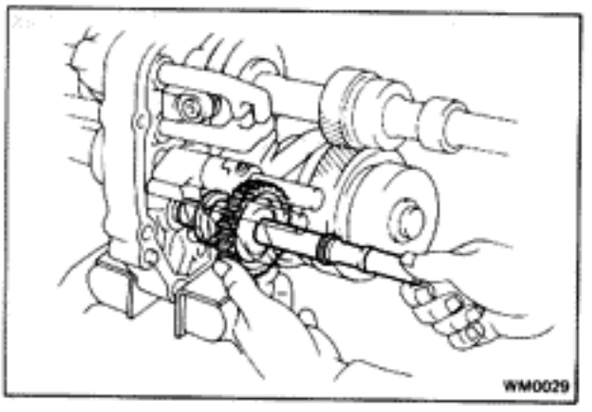

(d) Remove the reverse idler gear and shaft.

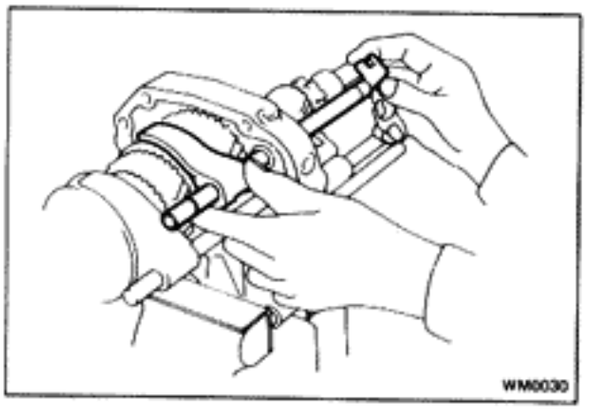

(e) Remove No. 1 shift fork and shaft.

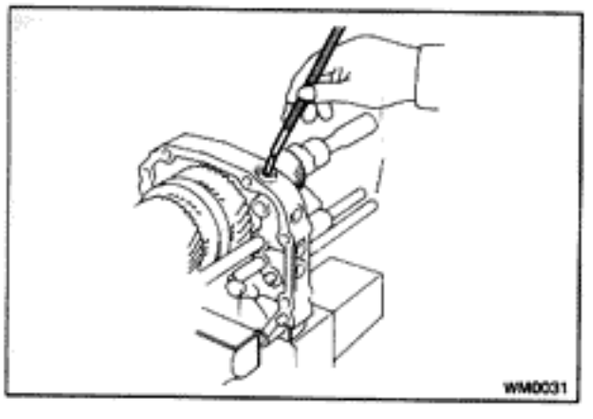

(f) Using a magnetic finger, remove No. 1 and No. 2 interlock pins.

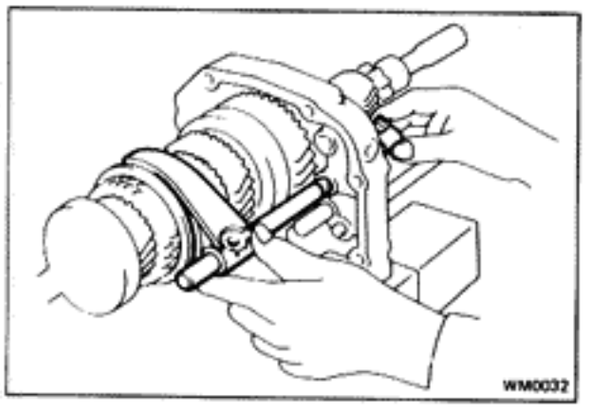

(g) Remove No. 2 shift fork and shaft.

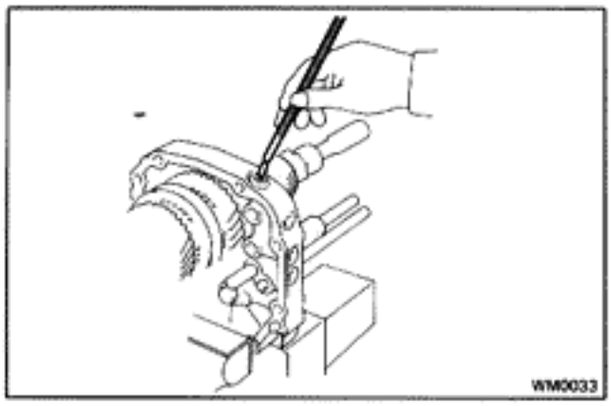

(h) Using a magnetic finger, remove No. 3 interlock pin.

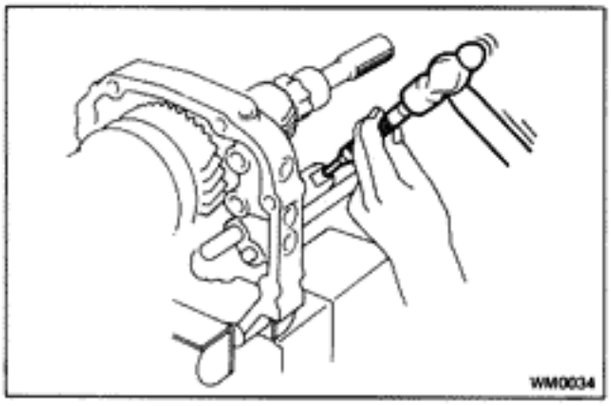

(i) Using a pin punch and hammer, drive out No. 3 fork shaft pin.

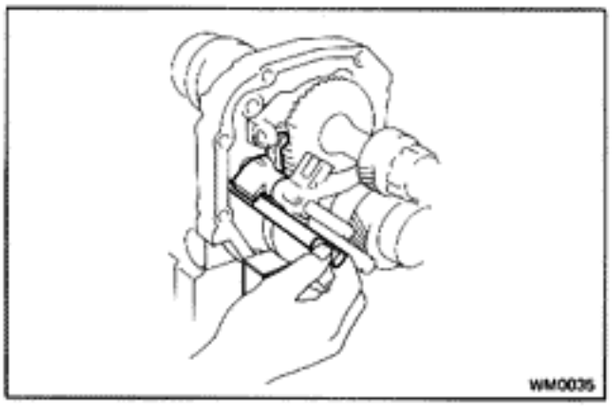

(j) Pull out No. 4 shift fork shaft.

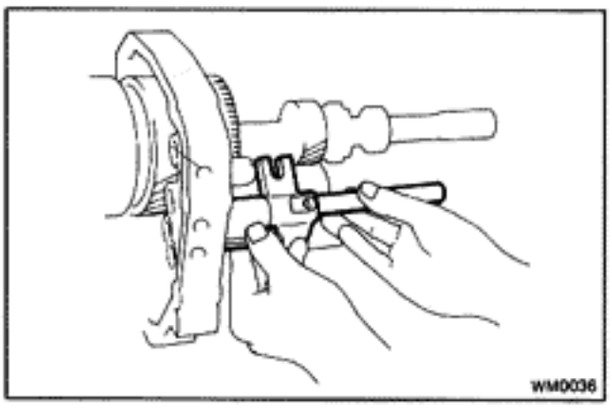

(k) Remove No. 3 shift fork, No. 3 fork shaft and reverse shift arm with the pin.

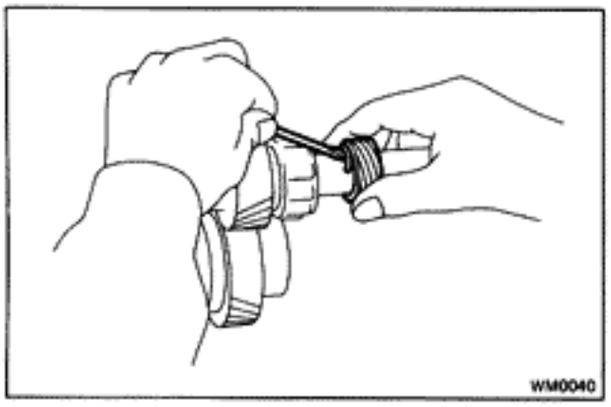

9. REMOVE SPEEDOMETER DRIVE GEAR

Pry out both ends of the clip and remove the drive gear.

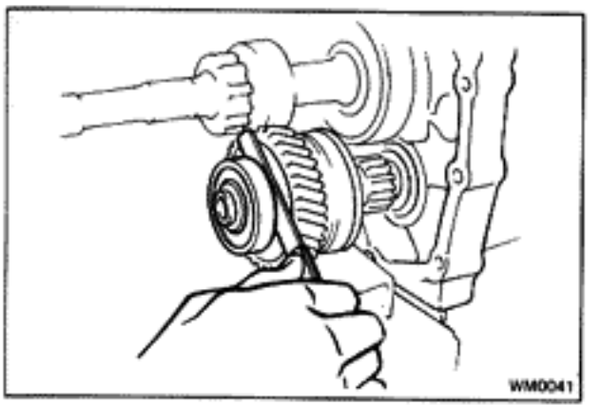

10. MEASURE COUNTER FIFTH GEAR THRUST CLEARANCE

Using a feeler gauge, measure the counter 5th gear thrust clearance.

Standard clearance: **0.10 — 0.41 mm (0.0039 — 0.0161 in.)**
Maximum clearance: **0.46 mm (0.0181 in.)**

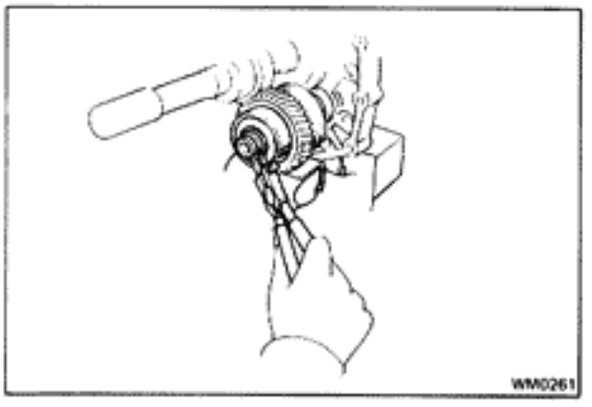

11. REMOVE COUNTER REAR BEARING, SPACER, COUNTER FIFTH GEAR AND NEEDLE ROLLER BEARING

(a) Using snap ring pliers, remove the snap ring.

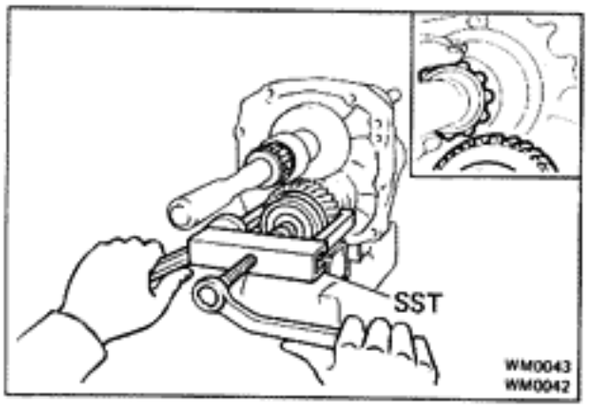

(b) Using SST, remove the rear bearing, spacer, 5th gear and bearing.

SST 09213-36020

CAUTION: Be careful not to catch the output shaft rear bearing roller on the counter 5th gear.

(c) Remove the spacer.

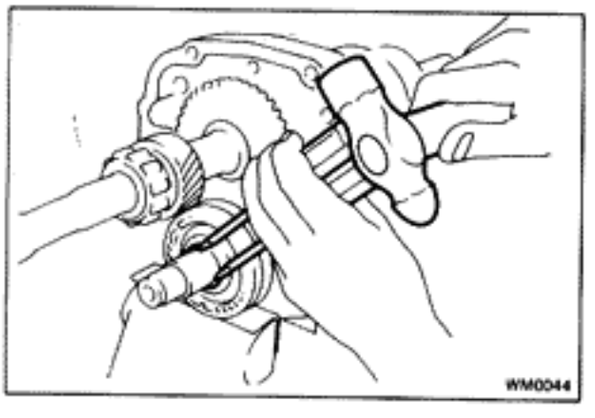

12. REMOVE NO. 3 HUB SLEEVE ASSEMBLY

(a) Using two screwdrivers and a hammer, tap out the snap ring.

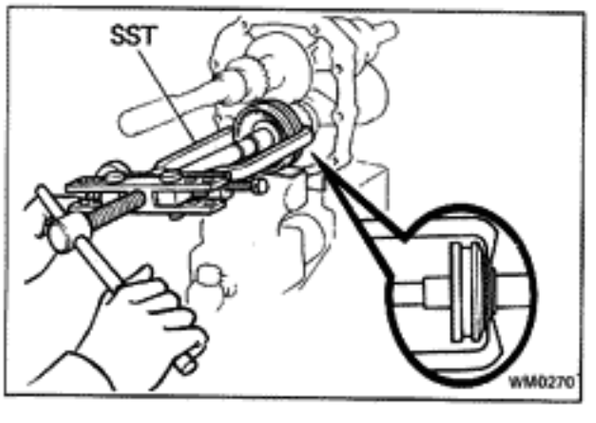

(b) Using SST, remove No. 3 clutch hub.

SST 09950-20016

CAUTION: Latch the claw of the SST onto the clutch hub, not the shifting key retainer.

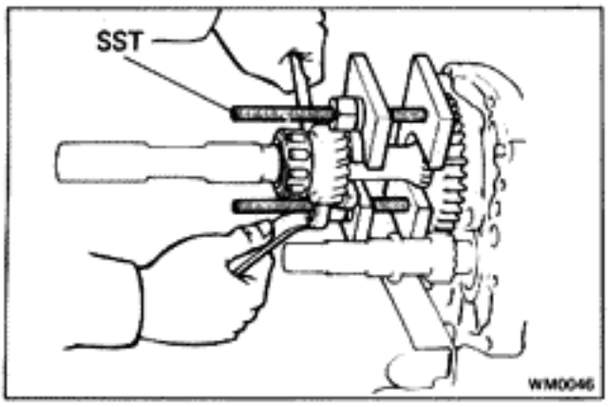

13. REMOVE OUTPUT SHAFT REAR BEARING AND FIFTH GEAR

(a) Using two screwdrivers and a hammer, tap out the snap ring.

(b) Using SST, remove the rear bearing and 5th gear.

SST 09312-20011

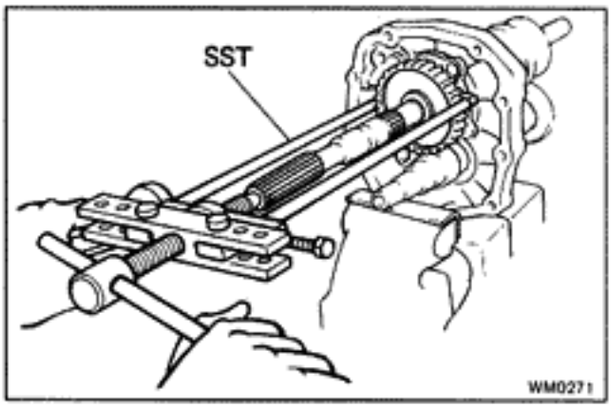

14. REMOVE REVERSE GEAR

(a) Using snap ring pliers, remove the snap ring.

(b) Using SST, remove the reverse gear.

SST 09950-20016

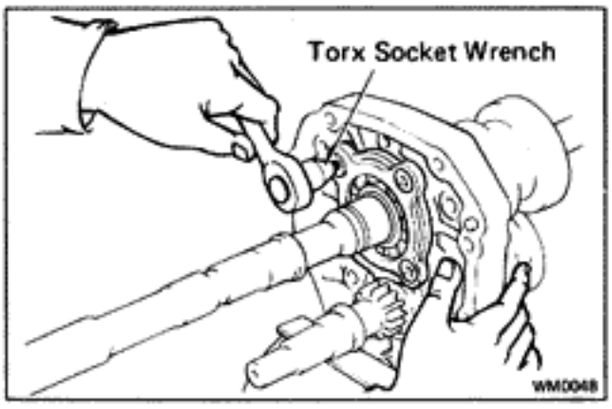

15. REMOVE CENTER BEARING RETAINER

(a) Using a torx socket wrench, unscrew the torx screws and remove the retainer.

(b) Using snap ring pliers, remove the snap ring.

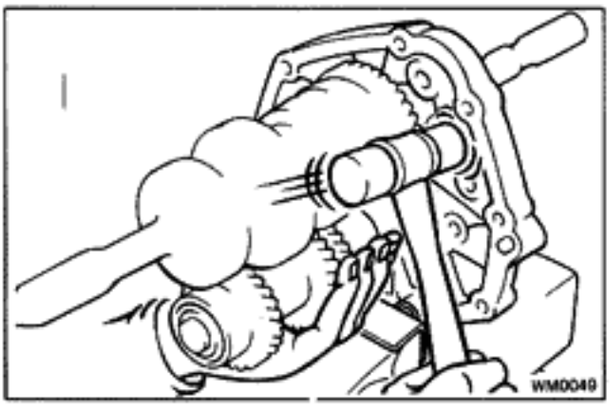

16. REMOVE OUTPUT SHAFT AND COUNTER GEAR AS A UNIT FROM INTERMEDIATE PLATE

(a) Remove the output shaft, input shaft and counter gear as a unit from the intermediate plate by pulling on the counter gear and tapping on the intermediate plate with a plastic hammer.

(b) Remove the input shaft from output shaft.

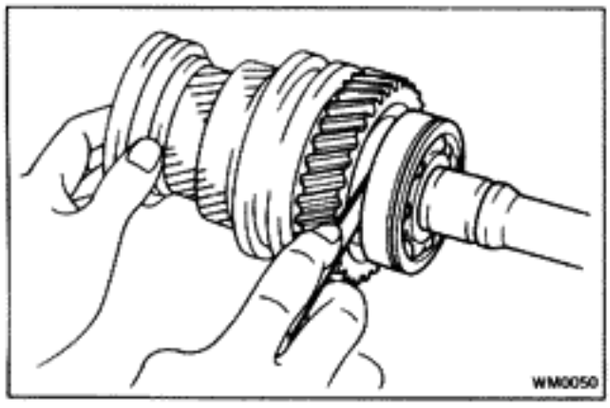

17. MEASURE EACH GEAR THRUST CLEARANCE

Using a feeler gauge, measure the thrust clearance of each gear.

Standard clearance: 0.10 – 0.25 mm (0.0039 – 0.0098 in.)

Maximum clearance: 0.30 mm (0.0118 in.)

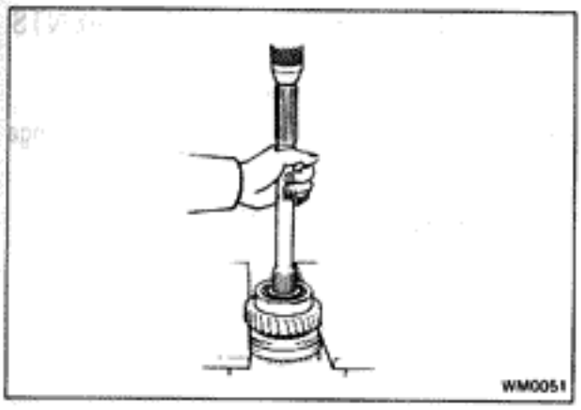

18. REMOVE OUTPUT SHAFT CENTER BEARING AND FIRST GEAR ASSEMBLY

(a) Shift No. 1 hub sleeve onto the 2nd gear.

(b) Using a press, remove the center bearing, 1st gear, needle roller bearing, inner race and synchronizer ring.

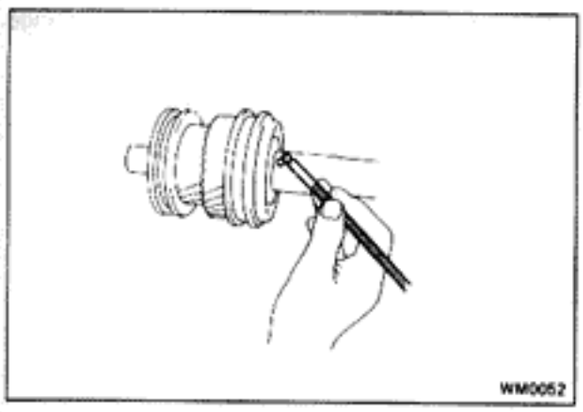

19. REMOVE LOCKING BALL

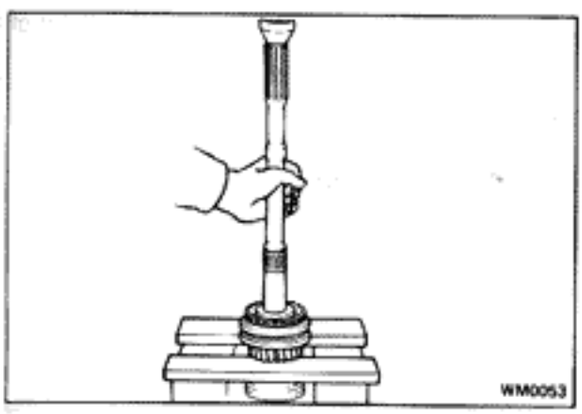

20. REMOVE NO. 1 HUB SLEEVE ASSEMBLY, SECOND GEAR AND NEEDLE ROLLER BEARING

Using a press, remove the parts from the shaft as an assembly.

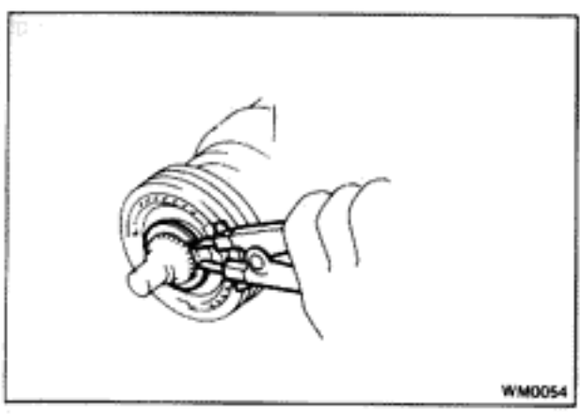

21. REMOVE NO. 2 HUB SLEEVE ASSEMBLY AND THIRD GEAR

(a) Using snap ring pliers, remove the snap ring.

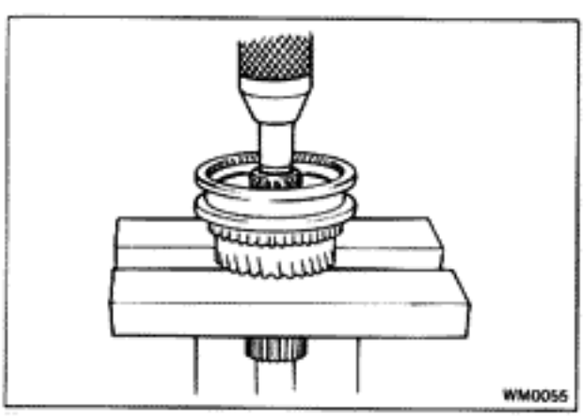

(b) Using a press, remove No. 2 hub sleeve, synchronizer ring and 3rd gear.

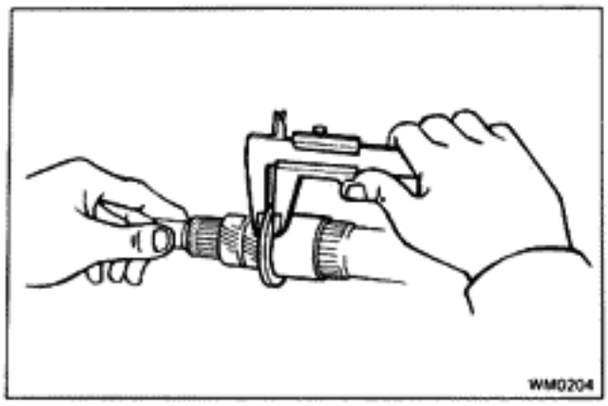

INSPECTION OF TRANSMISSION COMPONENTS

1. INSPECT OUTPUT SHAFT AND INNER RACE

(a) Using calipers, measure the output shaft flange thickness.

Minimum thickness: 5.60 mm (0.2205 in.)

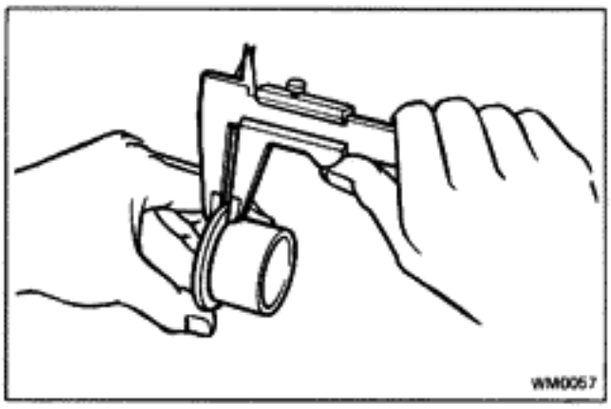

(b) Using calipers, measure the inner race flange thickness.

Minimum thickness: 4.70 mm (0.1850 in.)

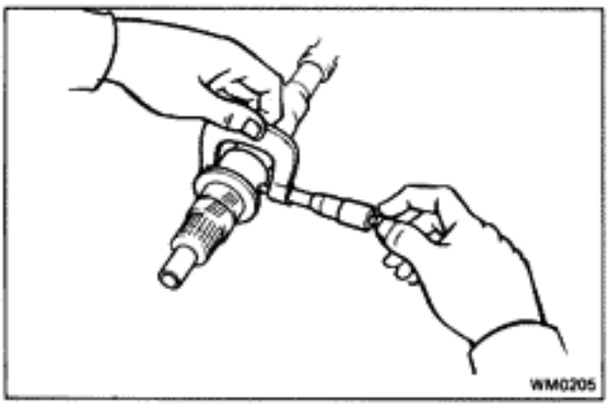

(c) Using a micrometer, measure the outer diameter of the output shaft journal.

Minimum diameter:

2nd gear 42.85 mm (1.6870 in.)
3rd gear 37.80 mm (1.4882 in.)

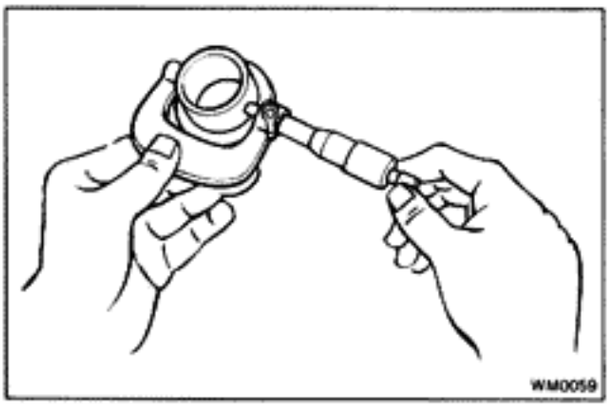

(d) Using a micrometer, measure the outer diameter of the inner race.

Minimum diameter: 42.85 mm (1.6870 in.)

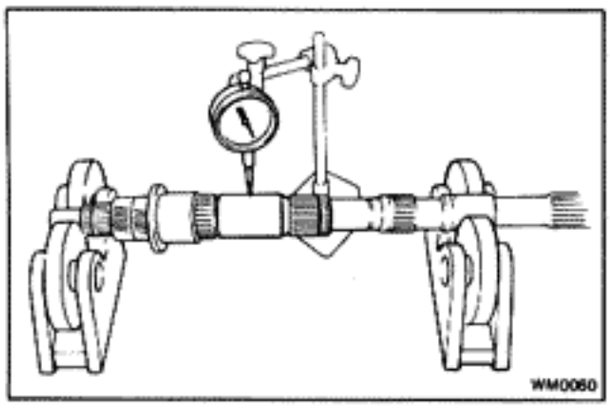

(e) Using a dial indicator, check the shaft runout.

Maximum runout: 0.06 mm (0.0024 in.)

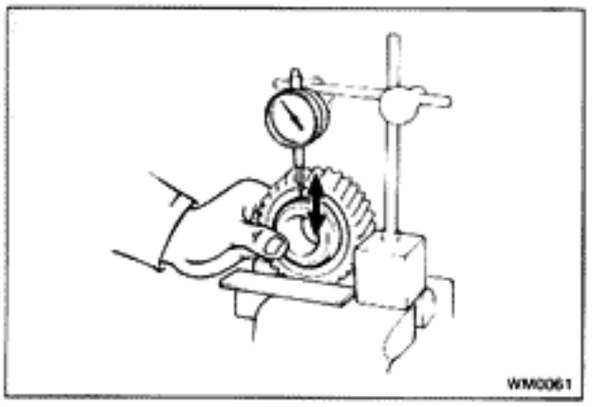

2. CHECK OIL CLEARANCE OF FIRST GEAR

Using a dial indicator, measure the oil clearance between the gear and inner race with the needle roller bearing installed.

Standard clearance: 0.009 — 0.060 mm (0.0004 — 0.0024 in.)
Maximum clearance: 0.15 mm (0.0059 in.)

If the clearance exceeds the limit, replace the gear, inner race and needle roller bearing.

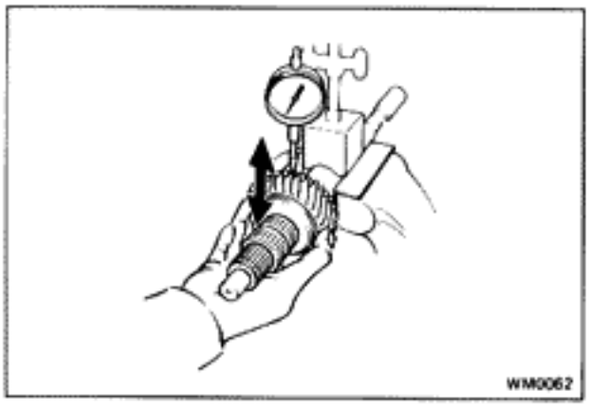

3. CHECK OIL CLEARANCE OF SECOND AND COUNTER FIFTH GEAR

Using a dial indicator, measure the oil clearance between the gear and output shaft with the needle roller bearing installed.

Standard clearance:
2nd gear 0.009 — 0.060 mm (0.0004 — 0.0024 in.)
5th gear 0.009 — 0.062 mm (0.0004 — 0.0024 in.)
Maximum clearance: 0.15 mm (0.0059 in.)

If the clearance exceeds the limit, replace the gear, output shaft and needle roller bearing.

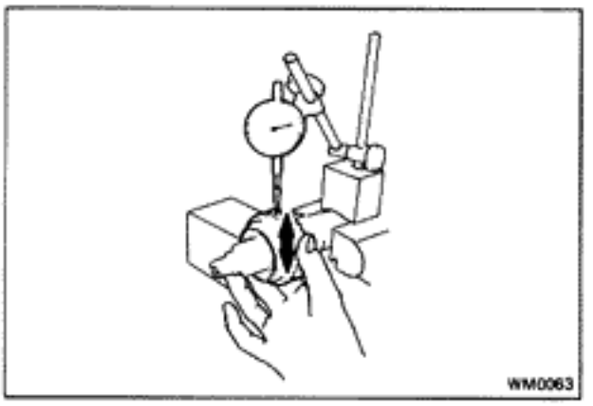

4. CHECK OIL CLEARANCE OF THIRD GEAR

Using a dial indicator, measure the oil clearance between the gear and output shaft.

Standard clearance: 0.060 — 0.103 mm (0.0024 — 0.0041 in.)
Maximum clearance: 0.20 mm (0.0079 in.)

If the clearance exceeds the limit, replace the gear and output shaft.

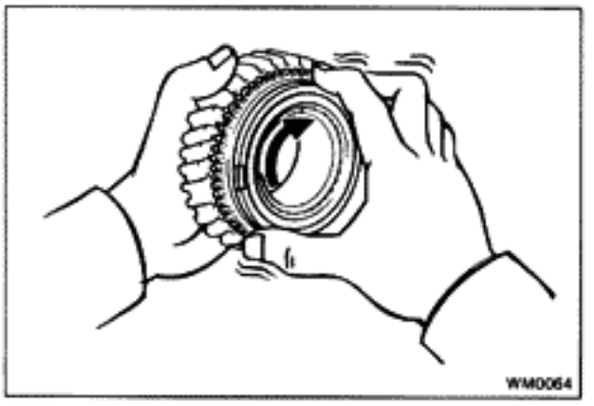

5. INSPECT SYNCHRONIZER RINGS

(a) Turn the ring and push it in to check the braking action.

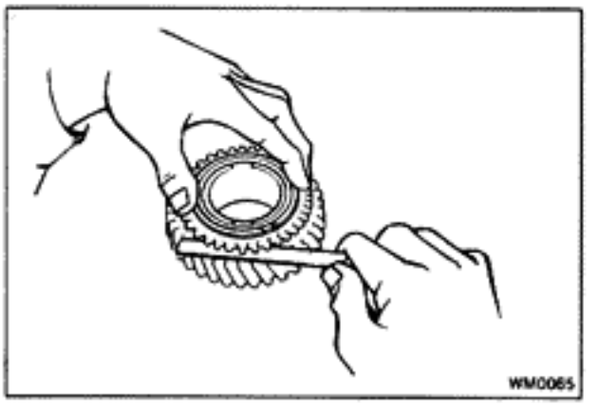

(b) Measure the clearance between the synchronizer ring back and the gear spline end.

Standard clearance: 0.7 — 1.7 mm (0.028 — 0.067 in.)
Minimum clearance: 0.5 mm (0.020 in.)

If the clearance is less than the limit, replace the synchronizer ring.

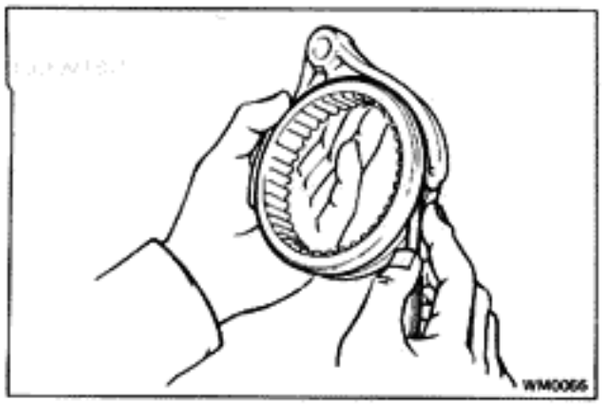

6. MEASURE CLEARANCE OF SHIFT FORKS AND HUB SLEEVES

Using a feeler gauge, measure the clearance between the hub sleeve and shift fork.

Maximum clearance: 1.0 mm (0.039 in.)

If the clearance exceeds the limit, replace the shift fork.

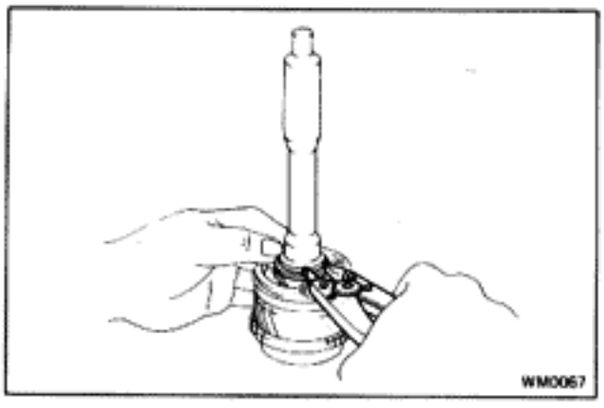

7. IF NECESSARY, REPLACE INPUT SHAFT BEARING

(a) Using snap ring pliers, remove the snap ring.

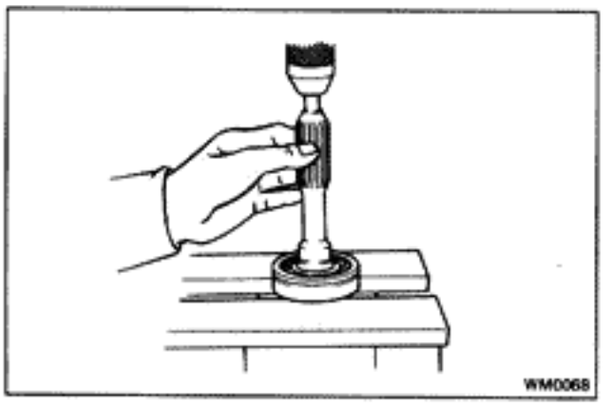

(b) Using a press, remove the bearing.

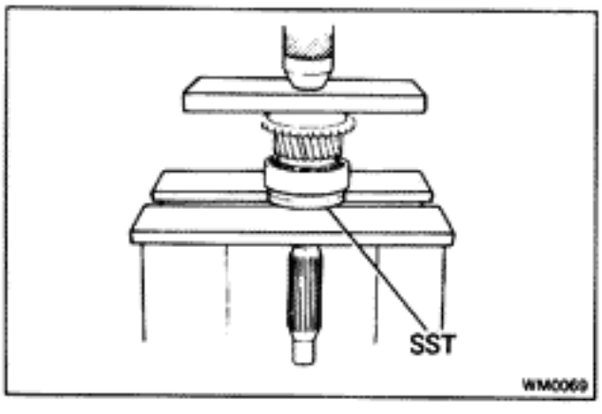

(c) Using a press and SST, install a new bearing.

SST 09506-35010

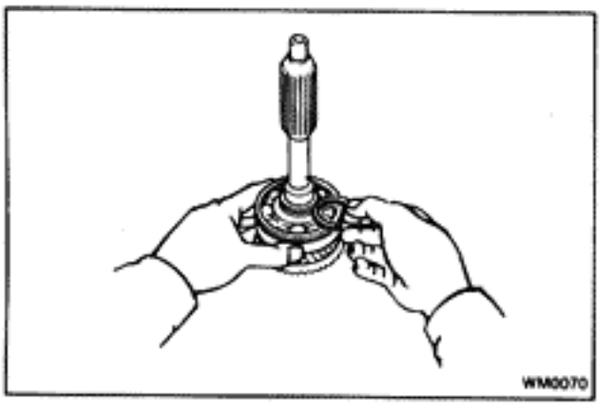

(d) Select a snap ring that will allow minimum axial play and install it on the shaft.

Mark	Thickness	mm (in.)
1	2.05 – 2.10	(0.0807 – 0.0827)
2	2.10 – 2.15	(0.0827 – 0.0846)
3	2.15 – 2.20	(0.0846 – 0.0866)
4	2.20 – 2.25	(0.0866 – 0.0886)
5	2.25 – 2.30	(0.0886 – 0.0906)
11	2.30 – 2.35	(0.0906 – 0.0925)
12	2.35 – 2.40	(0.0925 – 0.0945)

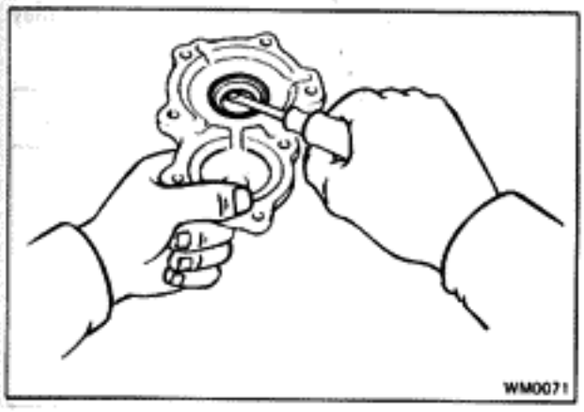

8. IF NECESSARY, REPLACE FRONT BEARING RETAINER OIL SEAL

(a) Using a screwdriver, pry out the oil seal.

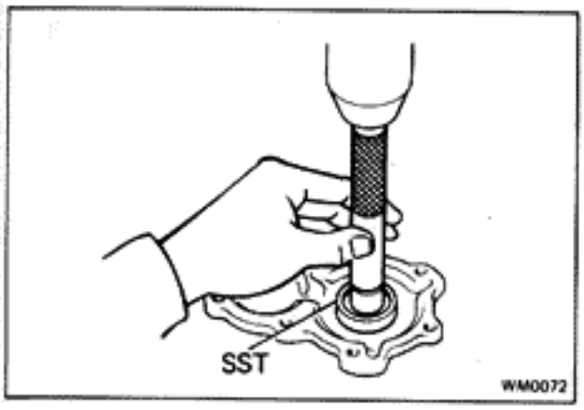

(b) Using SST, press in a new oil seal.

SST 09608-20012 (09608-03020, 09608-00080)

Oil seal depth: 11.4 — 12.0 mm from retainer end (0.449 — 0.472 in.)

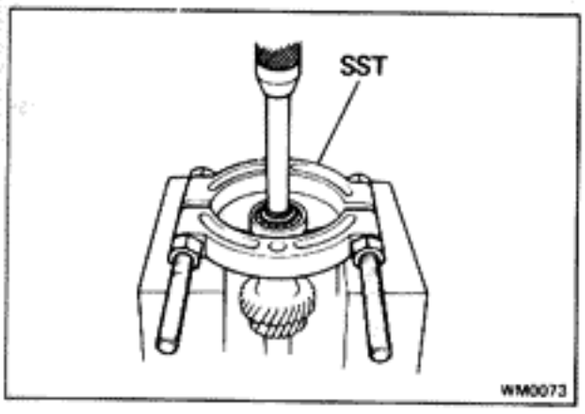

9. IF NECESSARY, REPLACE COUNTER GEAR FRONT BEARING AND SIDE RACE

(a) Using snap ring pliers, remove the snap ring.

(b) Using a press and SST, press out the bearing.

SST 09950-00020

(c) Check the side race for wear or damage.

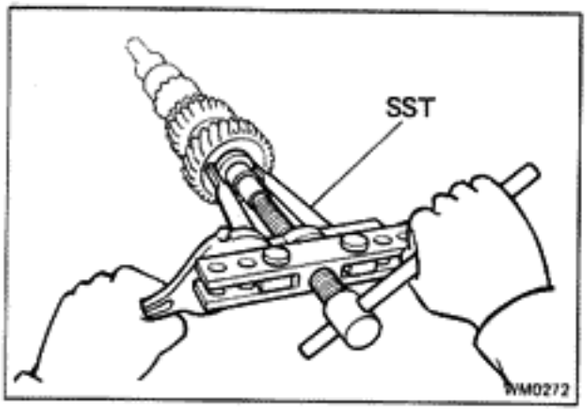

(d) If necessary, remove the side race.

Using a SST and socket wrench, remove the side race.

SST 09950-20016

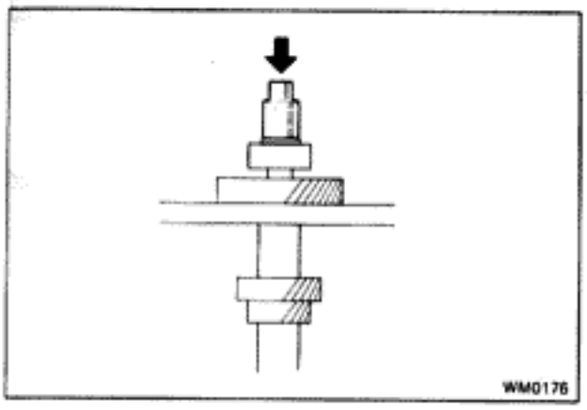

(e) Using a socket wrench, press in a new bearing, side race and inner race.

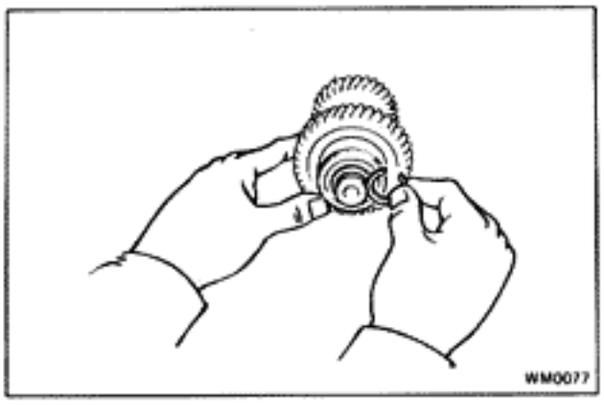

(f) Select a snap ring that will allow minimum axial play and install it on the shaft.

Mark	Thickness	mm (in.)
1	2.05 – 2.10	(0.0807 – 0.0827)
2	2.10 – 2.15	(0.0827 – 0.0846)
3	2.15 – 2.20	(0.0846 – 0.0866)
4	2.20 – 2.25	(0.0866 – 0.0886)
5	2.25 – 2.30	(0.0886 – 0.0906)
6	2.30 – 2.35	(0.0906 – 0.0925)
7	2.35 – 2.40	(0.0925 – 0.0945)

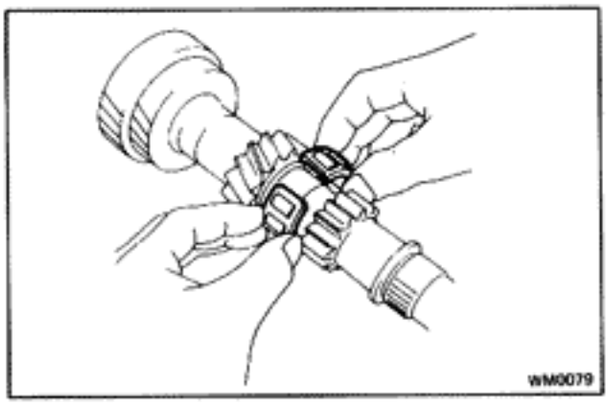

10. IF NECESSARY, REPLACE COUNTER GEAR CENTER BEARING

(a) Remove the bearing from the counter gear.

(b) Install a new bearing on the counter gear.

NOTE: Engage the roller cages.

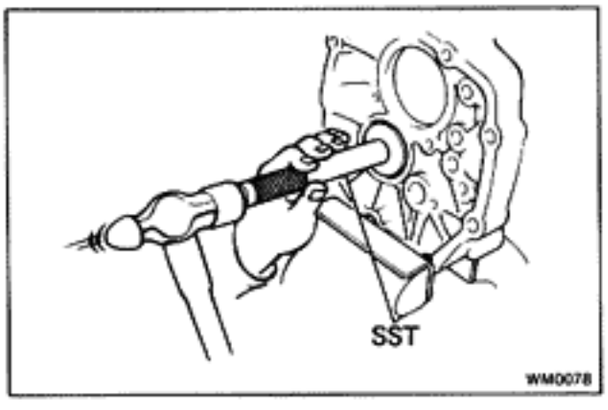

(c) Using SST, tap out the bearing outer race.

SST 09608-35014 (09608-06020, 09608-06090)

NOTE: The outer race will be installed later as the transmission is assembled.

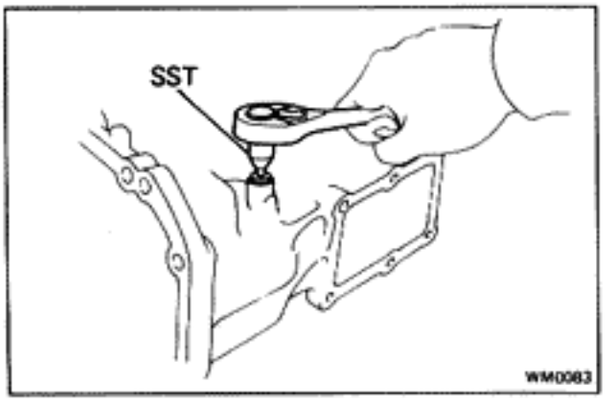

11. IF NECESSARY, REPLACE REVERSE RESTRICT PIN

(a) Using SST, remove the screw plug.

SST 09313-30021

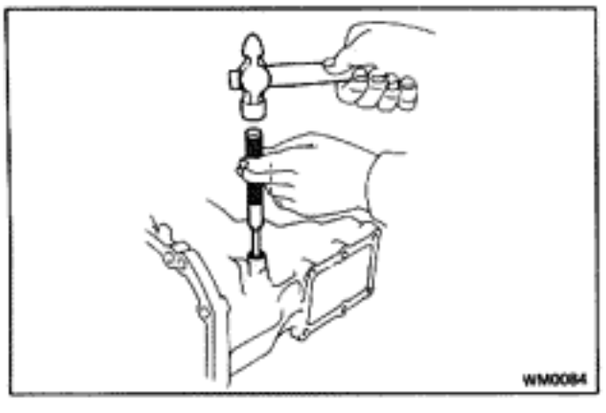

(b) Using a pin punch and hammer, drive out the slotted spring pin.

(c) Pull off the lever housing and slide out the shaft.

(d) Install the lever housing.

(e) Using a pin punch and hammer, drive in the slotted spring pin.

(f) Apply liquid sealer to the plug.

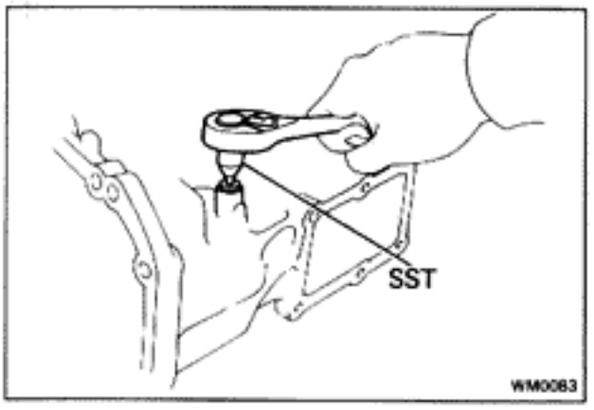

(g) Install and torque the screw plug.

Torque: 250 kg-cm (18 ft-lb, 25 N·m)

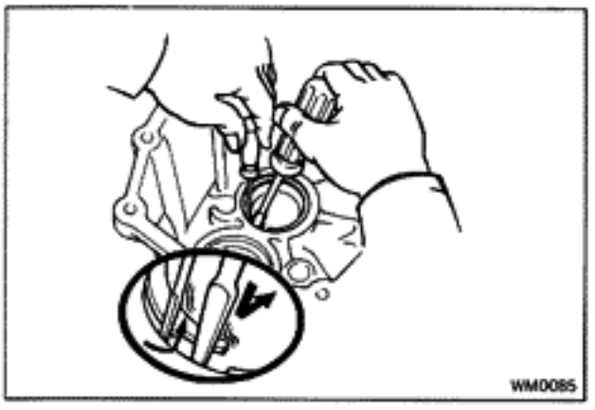

12. IF NECESSARY, REPLACE REAR BEARING OUTER RACE

(a) Remove the outer race from the extension housing.

(1) Using two screwdrivers, remove the snap ring.

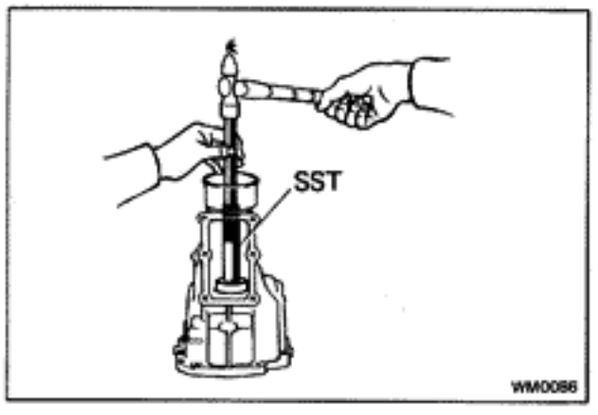

(2) Using SST, tap out the outer race.

SST 09608-35014 (09608-06020, 09608-06090)

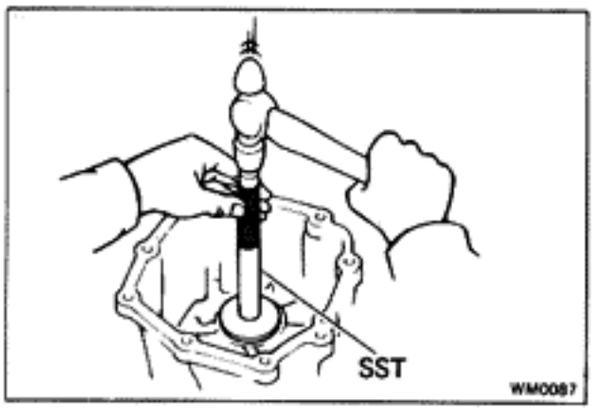

(b) Install the bearing outer race.

(1) Using SST, install a new outer race.

SST 09608-35014 (09608-06020, 09608-06100)

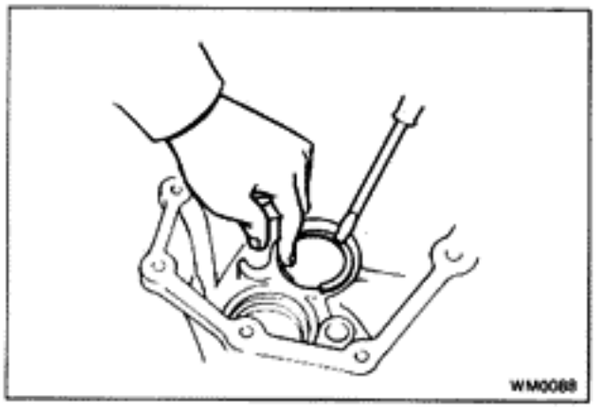

(2) Install the snap ring.

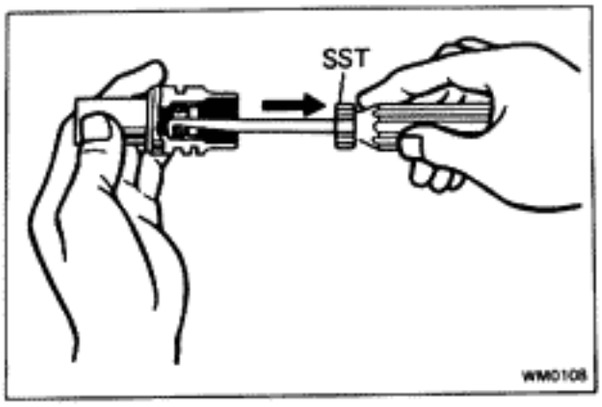

13. **REPLACE OIL SEAL ON SPEEDOMETER DRIVEN GEAR**

(a) Using SST, remove the oil seal.

SST 09921-00010

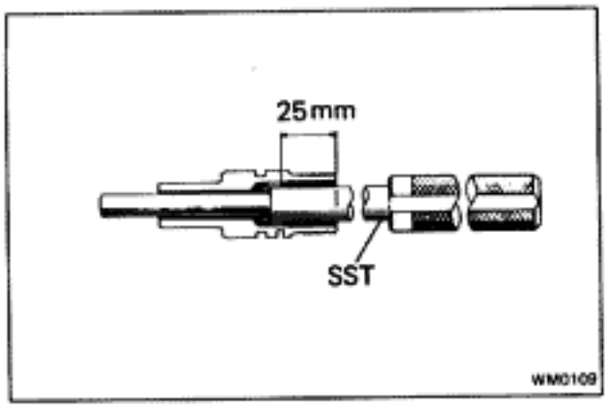

(b) Using SST, install a new oil seal.

SST 09201-60011

Oil seal depth: 25 mm (0.98 in.)

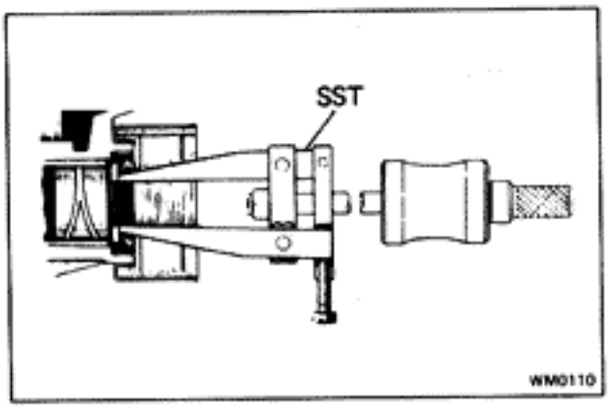

14. **IF NECESSARY, REPLACE OIL SEAL AND BUSHING**

(a) Using SST, remove the oil seal.

SST 09308-00010 or
09308-10010 w/ output shaft installed

(b) Heat the extension housing end to 80 – 100°C (176 – 212°F) in an oil bath.

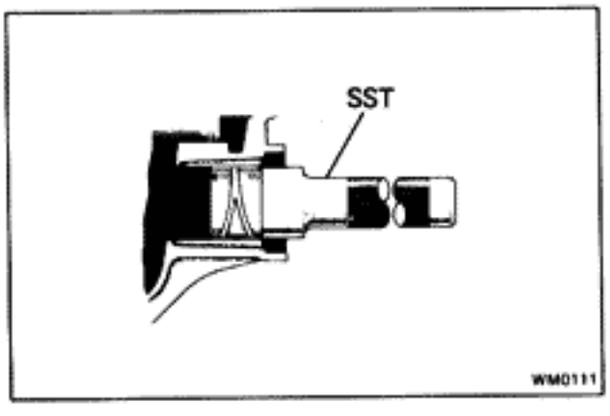

(c) Using SST, remove the bushing and install a new bushing.

SST 09307-30010

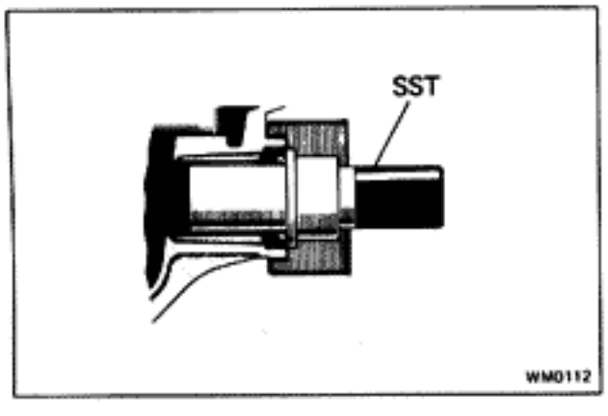

(d) Using SST, drive in a new oil seal.

SST 09325-20010

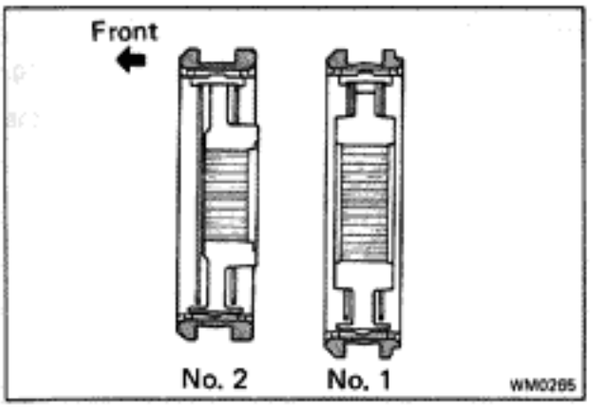

ASSEMBLY OF TRANSMISSION

(See pages MT-5, 6)

1. INSERT NO. 1 AND NO. 2 CLUTCH HUB INTO HUB SLEEVE

(a) Install the clutch hub and shifting keys to the hub sleeve.

(b) Install the shifting key springs under the shifting keys.

CAUTION: Install the key springs positioned so that their end gaps are not in line.

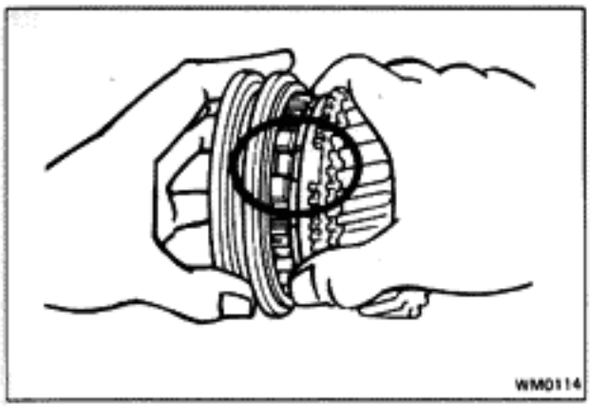

2. INSTALL THIRD GEAR AND NO. 2 CLUTCH HUB ON OUTPUT SHAFT

(a) Apply gear oil to the shaft.

(b) Place the synchronizer ring on the gear and align the ring slots with the shifting keys.

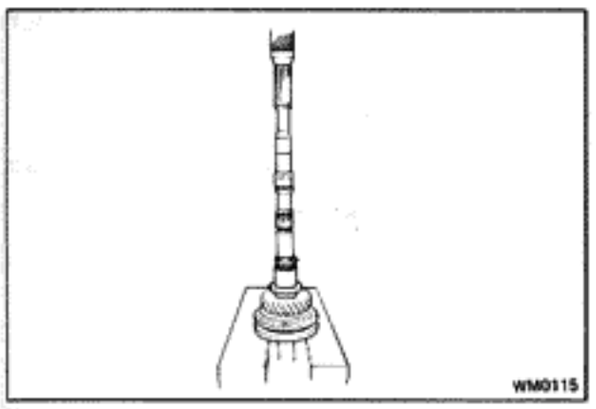

(c) Using a press, install the 3rd gear and No. 2 clutch hub.

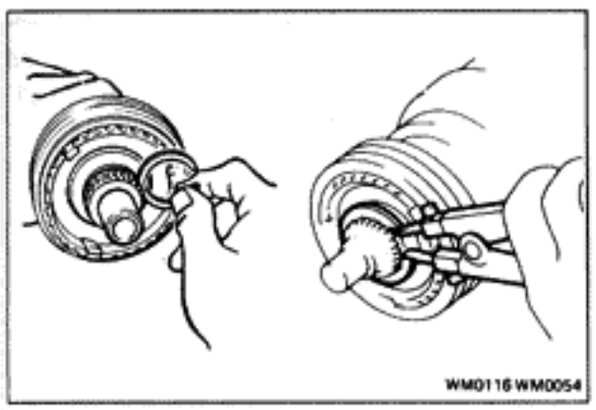

3. INSTALL SNAP RING

Select a snap ring that will allow minimum axial play, and install it on the shaft.

Mark	Thickness	mm (in.)
D	1.80 — 1.85	(0.0709 — 0.0728)
11	1.86 — 1.91	(0.0732 — 0.0752)
12	1.92 — 1.97	(0.0756 — 0.0776)
13	1.98 — 2.03	(0.0780 — 0.0799)
14	2.04 — 2.09	(0.0803 — 0.0823)
15	2.10 — 2.15	(0.0827 — 0.0846)

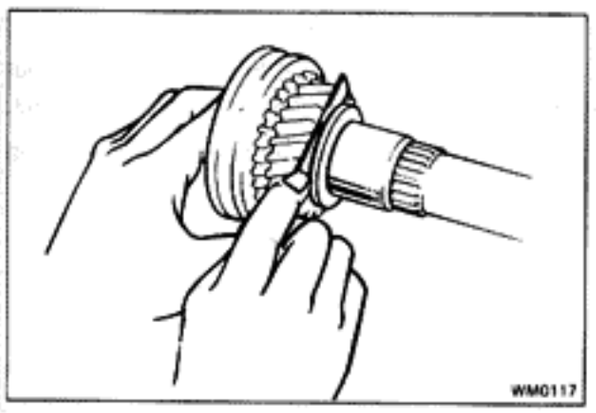

4. MEASURE THIRD GEAR THRUST CLEARANCE

Using a feeler gauge, measure the 3rd gear thrust clearance.

Standard clearance: 0.10 — 0.25 mm (0.0039 — 0.0098 in.)

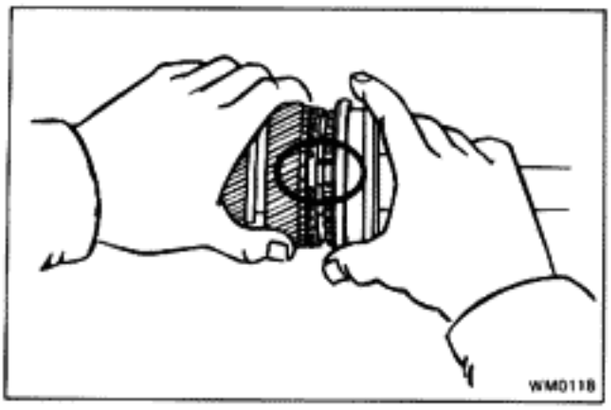

5. INSTALL SECOND GEAR AND NO. 1 CLUTCH HUB

(a) Apply gear oil to the shaft and needle roller bearing.

(b) Place the synchronizer ring on the gear and align the ring slots with the shifting keys.

(c) Install the needle roller bearing in the 2nd gear.

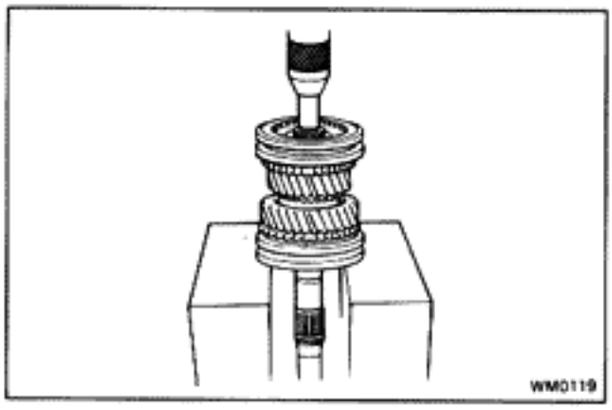

(d) Using a press, install the 2nd gear and No. 1 clutch hub.

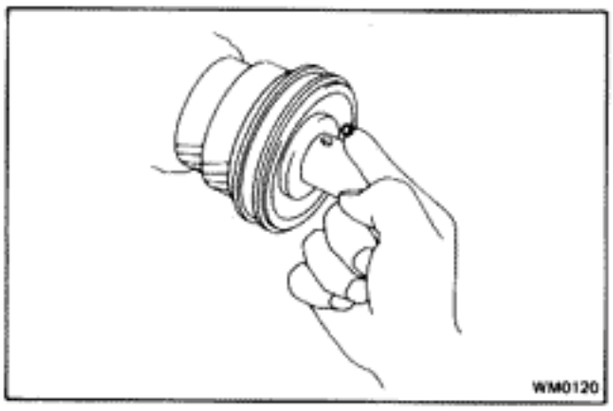

6. INSTALL LOCKING BALL AND FIRST GEAR ASSEMBLY

(a) Install the locking ball in the shaft.

(b) Apply gear oil to the bearing.

(c) Assemble the 1st gear, synchronizer ring, needle roller bearing and bearing inner race.

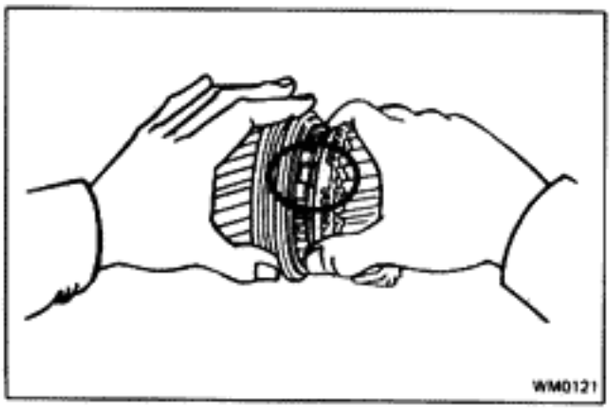

(d) Install the assembly on the output shaft with the synchronizer ring slots aligned with the shifting keys and turn the inner race to align it with the locking ball.

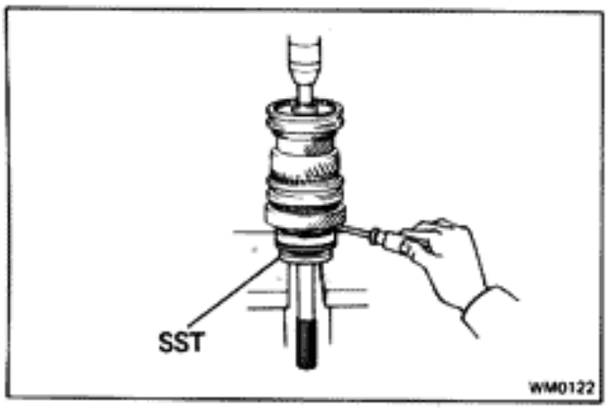

7. INSTALL OUTPUT SHAFT CENTER BEARING

Using SST and a press, install the bearing on the output shaft with the outer race snap ring groove toward the rear.

NOTE: Hold the 1st gear inner race to prevent it from falling.

SST 09506-35010

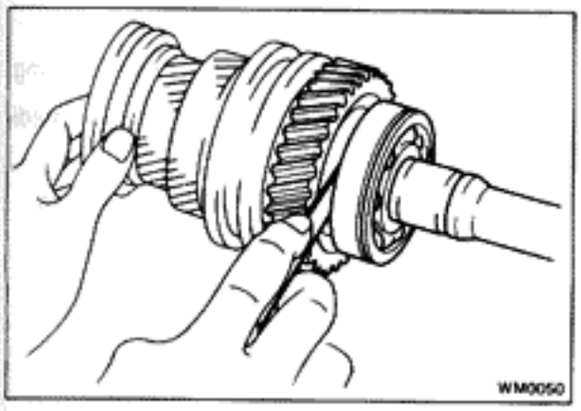

8. MEASURE FIRST AND SECOND GEAR THRUST CLEARANCE

Using a feeler gauge, measure the 1st and 2nd gear thrust clearance.

Standard clearance: **0.10 — 0.25 mm (0.0039 — 0.0098 in.)**

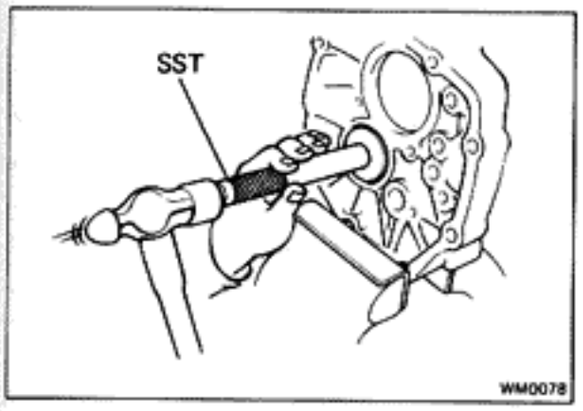

9 INSTALL OUTPUT SHAFT TO INTERMEDIATE PLATE

(a) Before installing the output shaft, use SST to remove the counter gear center bearing outer race.

SST 09608-35014 (09608-06020, 09608-06090)

NOTE: Install the outer race after installing the counter gear.

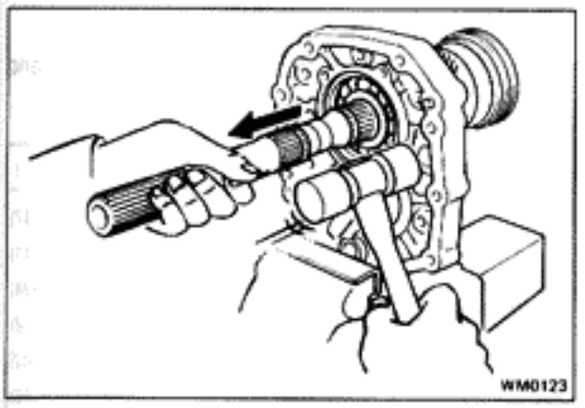

(b) Install the output shaft into the intermediate plate by pulling on the output shaft and tapping on the intermediate plate.

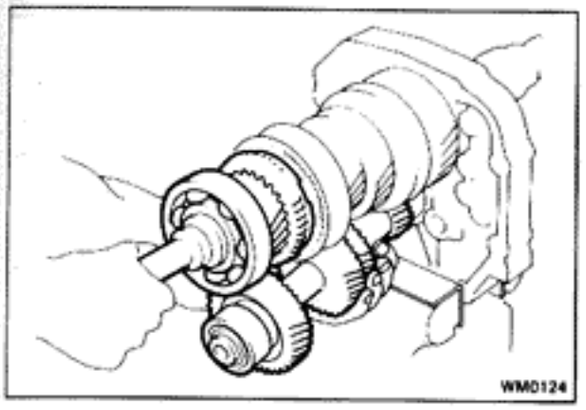

10. INSTALL INPUT SHAFT AND COUNTER GEAR

(a) Install the input shaft and counter gear together.

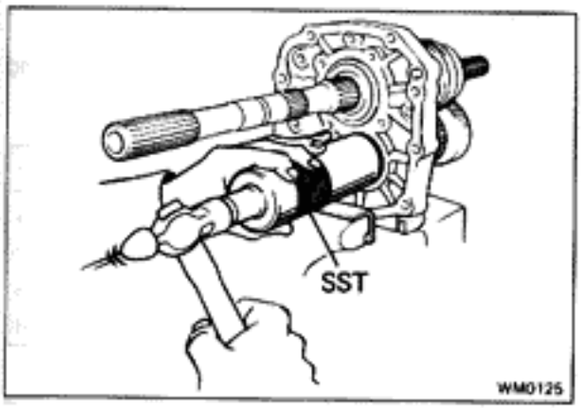

(b) Using SST, install the counter gear center bearing outer race.

SST 09316-60010 (09316-00010, 09316-00070)

NOTE: Be careful not to damage the bearing rollers.

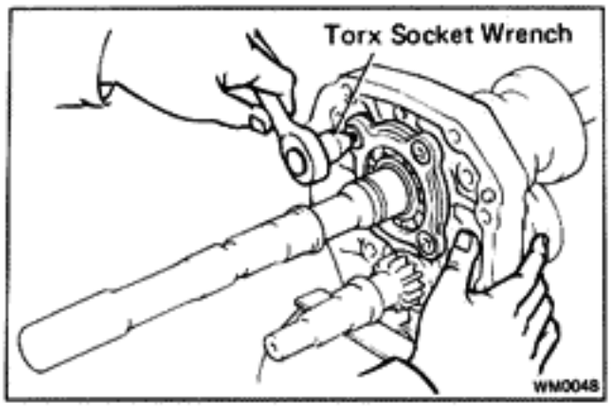

11. INSTALL BEARING RETAINER

(a) Using snap ring pliers, install the bearing snap ring.

NOTE: Be sure the snap ring is flush with the intermediate plate surface.

(b) Using a torx socket wrench, tighten the screws.

Torque: 130 kg-cm (9 ft-lb, 13 N·m)

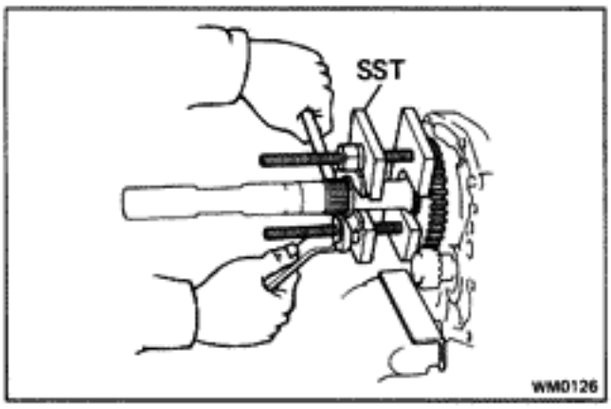

12. INSTALL REVERSE GEAR

Using SST, install the reverse gear.

SST 09312-20011

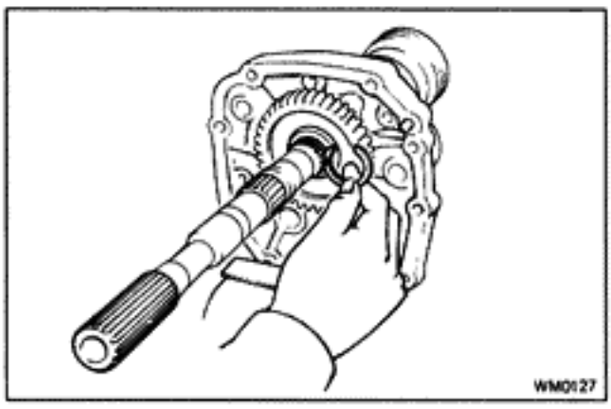

13. INSTALL SNAP RING

Select a snap ring that will allow minimum axial play and install it on the shaft.

Mark	Thickness mm (in.)	Mark	Thickness mm (in.)
5	2.25 – 2.30 (0.0886 – 0.0906)	17	2.61 – 2.66 (0.1028 – 0.1047)
11	2.30 – 2.35 (0.0906 – 0.0925)	18	2.67 – 2.72 (0.1051 – 0.1071)
12	2.35 – 2.40 (0.0925 – 0.0945)	19	2.73 – 2.78 (0.1075 – 0.1094)
13	2.40 – 2.45 (0.0945 – 0.0965)	20	2.79 – 2.84 (0.1098 – 0.1118)
14	2.45 – 2.50 (0.0965 – 0.0984)	21	2.85 – 2.90 (0.1122 – 0.1142)
15	2.50 – 2.55 (0.0984 – 0.1004)	22	2.91 – 2.96 (0.1146 – 0.1165)
16	2.55 – 2.60 (0.1004 – 0.1024)	23	2.97 – 3.02 (0.1169 – 0.1189)

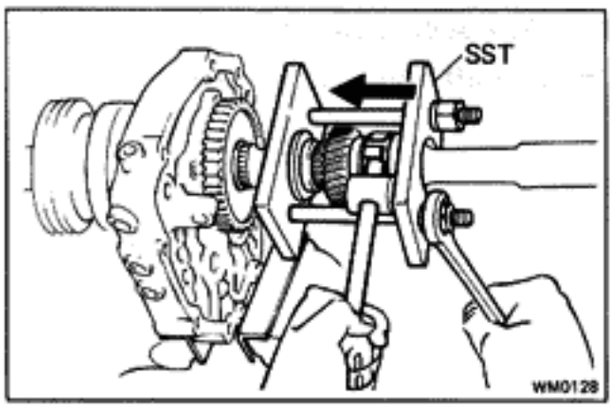

14. INSTALL FIFTH GEAR AND OUTPUT SHAFT REAR BEARING

Using SST, install the 5th gear and rear bearing.

SST 09312-20011

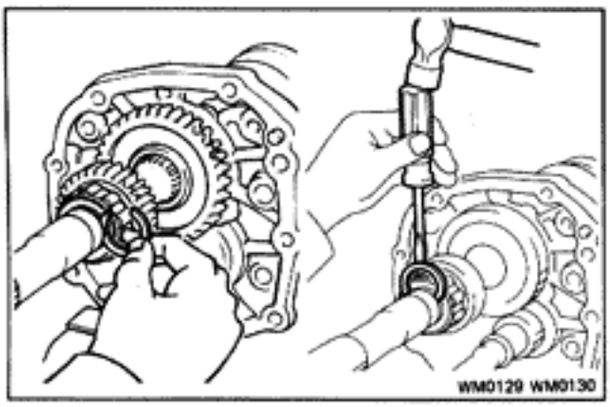

15. INSTALL SNAP RING

Select a snap ring that will allow minimum axial play and install it on the shaft.

Mark	Thickness mm (in.)	Mark	Thickness mm (in.)
8	2.31 – 2.36 (0.0909 – 0.0929)	12	2.55 – 2.60 (0.1004 – 0.1024)
9	2.37 – 2.42 (0.0933 – 0.0953)	13	2.61 – 2.66 (0.1028 – 0.1047)
10	2.43 – 2.48 (0.0957 – 0.0976)	14	2.68 – 2.73 (0.1055 – 0.1075)
11	2.49 – 2.54 (0.0980 – 0.1000)	15	2.74 – 2.79 (0.1079 – 0.1098)

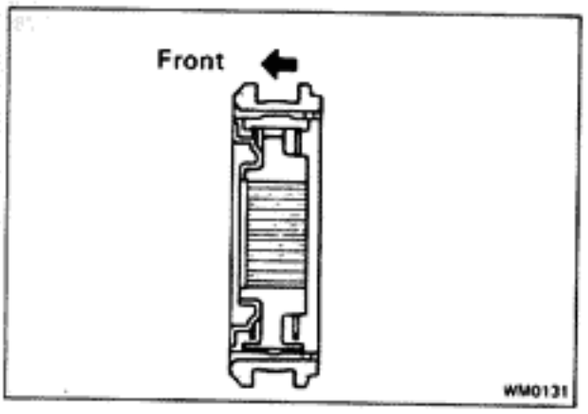

16. INSERT NO. 3 CLUTCH HUB INTO HUB SLEEVE

(a) Install No. 3 clutch hub and the shifting keys to the hub sleeve.

(b) Install the shifting key springs under the shifting keys.

CAUTION: Install the key springs positioned so that their end gaps are not in line.

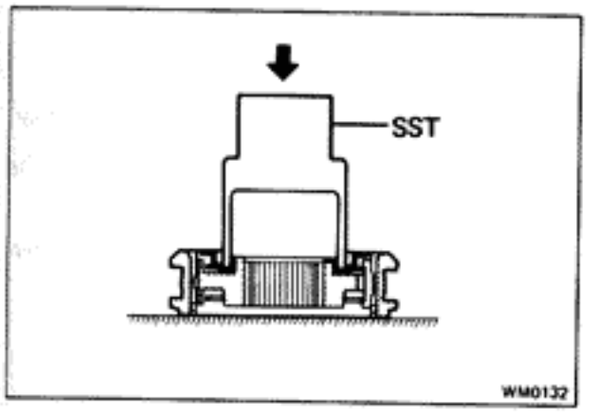

(c) Using SST, install the shifting key retainer.

SST 09238-47012

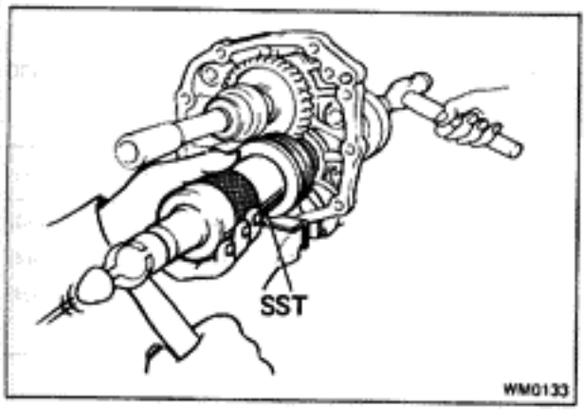

17. INSTALL NO. 3 CLUTCH HUB

Using SST, drive in No. 3 clutch hub.

SST 09316-60010 (09316-00010)

NOTE: When installing the clutch hub, support the countershaft in front with a 3-5 lb hammer or equivalent.

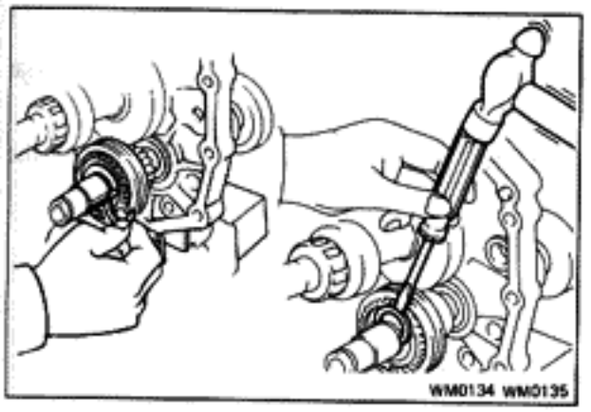

18. INSTALL SNAP RING

Select a snap ring that will allow minimum axial play and install it on the shaft.

Mark	Thickness	mm (in.)
2	2.06 – 2.11	(0.0811 – 0.0831)
3	2.12 – 2.17	(0.0835 – 0.0854)
4	2.18 – 2.23	(0.0858 – 0.0878)
5	2.24 – 2.29	(0.0882 – 0.0902)

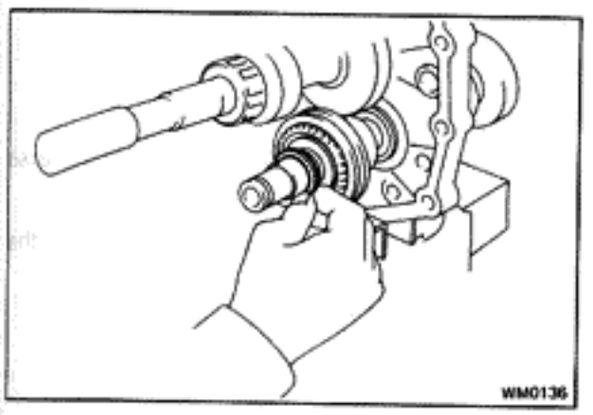

19. INSTALL SPACER, SYNCHRONIZER RING, NEEDLE ROLLER BEARING AND COUNTER FIFTH GEAR

(a) Install the bearing spacer.

(b) Apply gear oil to the needle roller bearings.

(c) Assemble the counter 5th gear, synchronizer ring and needle roller bearings.

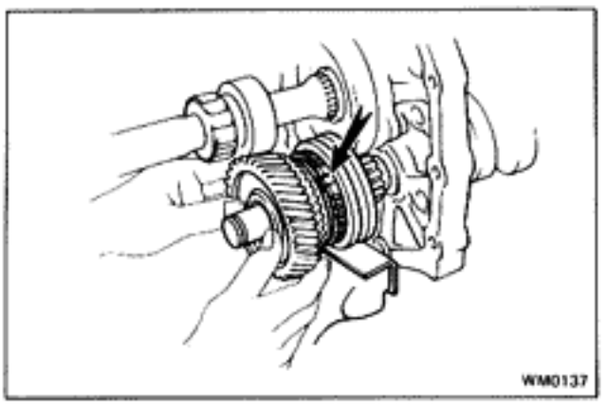

(d) Install the 5th gear assembly with the synchronizer ring slots aligned with the shifting keys.

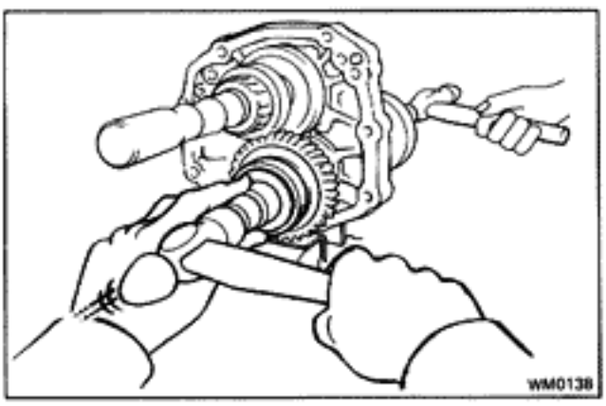

20. INSTALL SPACER AND BEARING

(a) Install the spacer.

(b) Install the bearing with the ball shield toward the rear.

(c) Using a hammer and socket wrench, drive in the bearing.

NOTE: When driving in the bearing, support the counter-shaft in front with a 3—5 lb. hammer or equivalent.

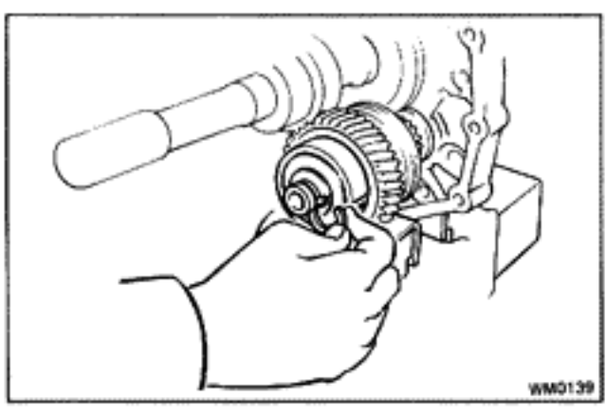

21. INSTALL SNAP RING

Select a snap ring that will allow minimum axial play and install it on the shaft.

Mark	Thickness mm (in.)	Mark	Thickness mm (in.)
1	1.90 – 1.95 (0.0748 – 0.0768)	5	2.14 – 2.19 (0.0843 – 0.0862)
2	1.96 – 2.01 (0.0772 – 0.0791)	6	2.20 – 2.25 (0.0866 – 0.0886)
3	2.02 – 2.07 (0.0795 – 0.0815)	7	2.26 – 2.31 (0.0890 – 0.0909)
4	2.08 – 2.13 (0.0819 – 0.0839)		

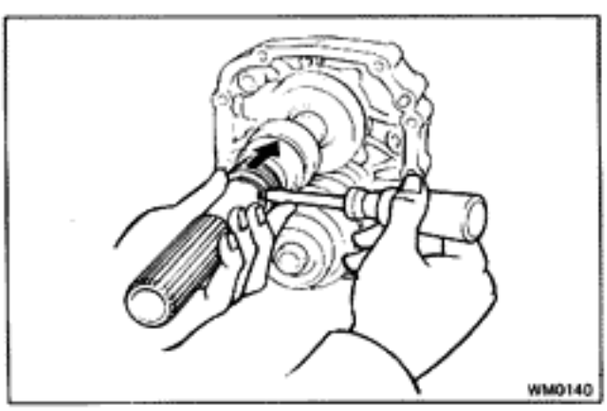

22. INSTALL SPEEDOMETER DRIVE GEAR

(a) Put a clip on the output shaft and install the drive gear clip into the slot.

(b) Slide the drive gear with clip and fit the clip into the holes.

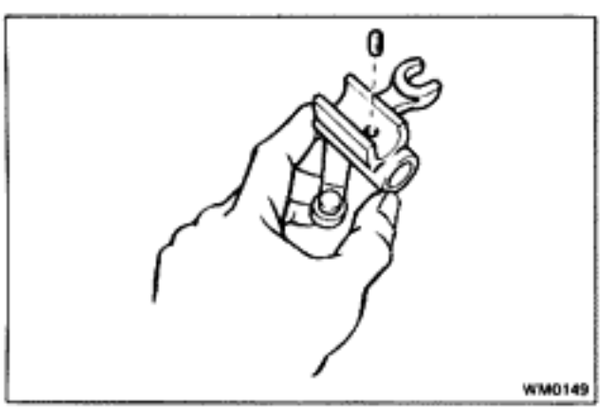

23. INSTALL SHIFT FORKS, SHIFT FORK SHAFTS AND REVERSE IDLER GEAR

(a) Install the reverse idler gear and shaft.

(b) Install No. 3 shift fork, No. 3 fork shaft and reverse shift arm.

(1) Coat the pin with MP grease and insert it into the reverse shift head hole.

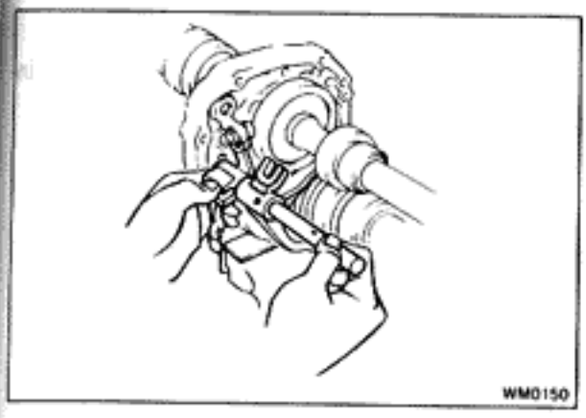

(2) Insert No. 3 shift fork shaft through No. 3 shift fork and the reverse shift arm.

(3) Align No. 3 shift fork with the No. 3 hub sleeve groove. Put the reverse shift arm into the pivot of bearing retainer and align the reverse shift arm shoe with the reverse idler gear groove. Install No. 3 shift fork shaft to the intermediate plate.

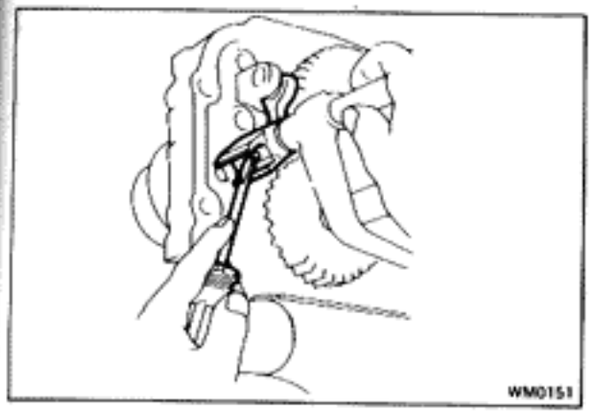

(c) Install No. 4 shift fork shaft.

(1) Push the pin, which was inserted into the reverse shift arm hole, into the groove of No. 3 shift fork shaft.

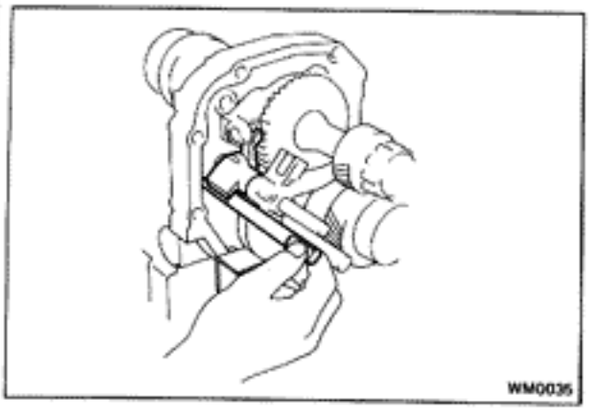

(2) Install No. 4 shift fork shaft to the intermediate plate over the reverse shift arm.

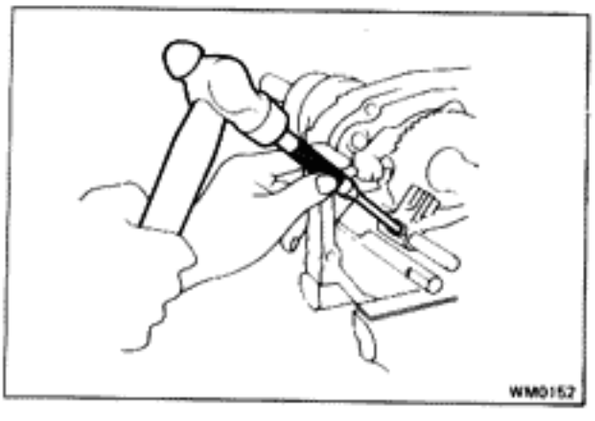

(d) Using a pin punch, drive in the slotted spring pin until it is flush with the fork.

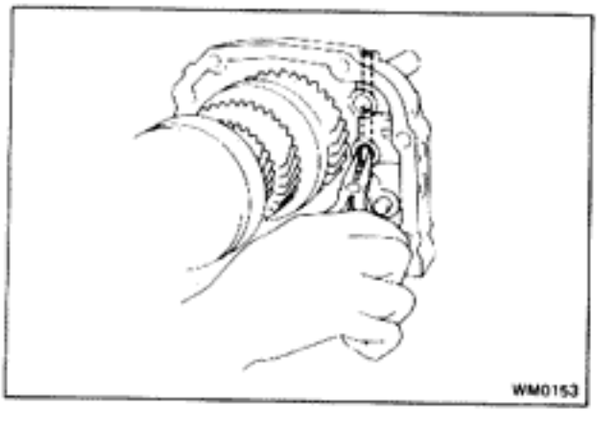

(e) Apply MP grease to No. 3 interlock pin and install the pin into the intermediate plate hole.

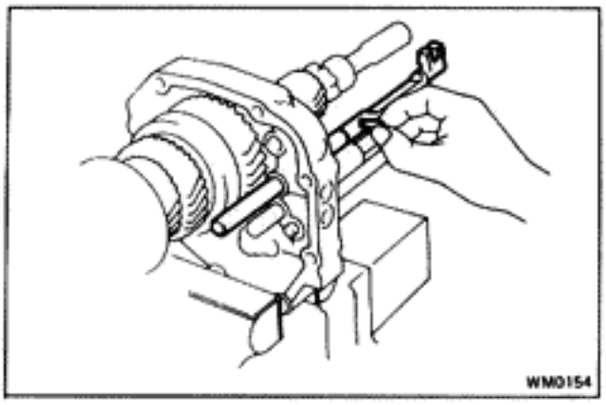

(f) Install No. 2 shift fork and fork shaft.

(1) Apply MP grease to No. 2 interlock pin and install the pin into the shaft hole.

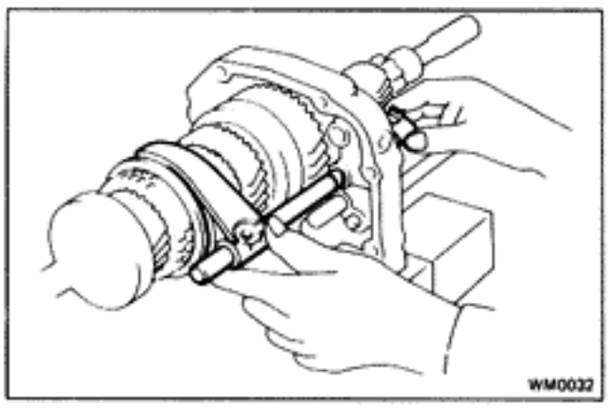

(2) Place No. 2 shift fork into the groove of No. 2 hub sleeve.

(3) Install No. 2 fork shaft to the shift fork through the intermediate plate.

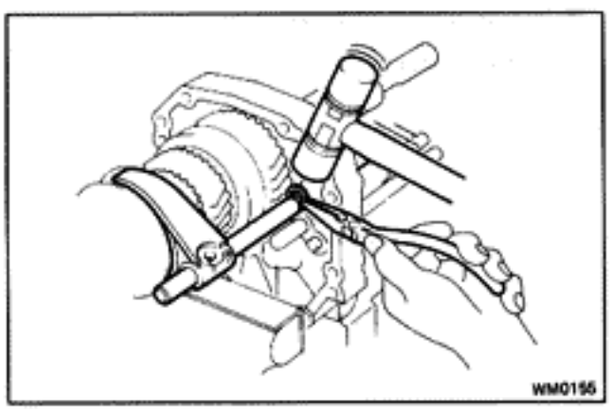

(g) Install the snap ring of No. 2 fork shaft.

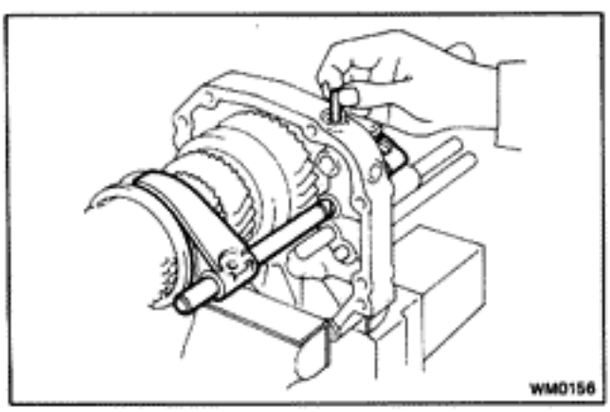

(h) Apply MP grease to No. 1 interlock pin and install the pin into the intermediate plate.

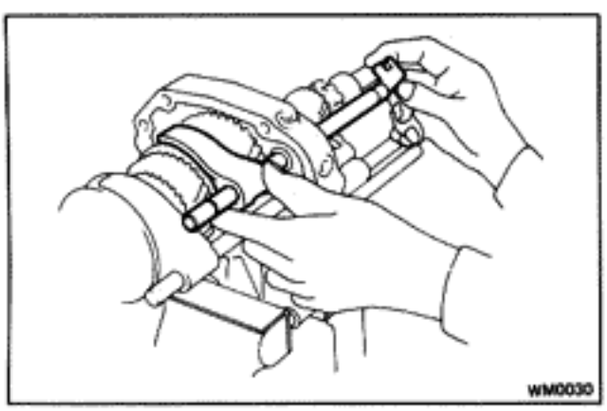

(i) Install No. 1 shift fork and fork shaft.

(1) Install No. 1 shift fork into the groove of No. 1 hub sleeve.

(2) Insert No. 1 fork shaft to the shift fork through the intermediate plate.

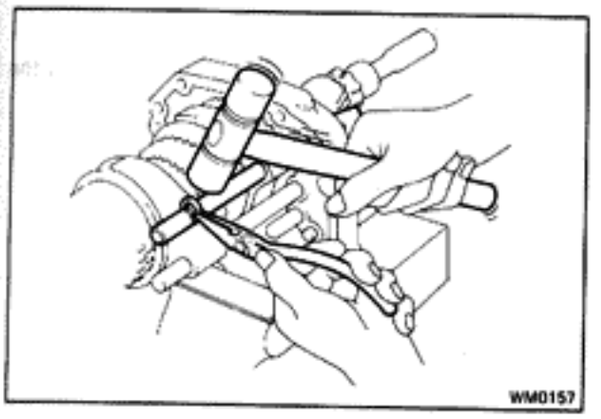

(j) Install the snap ring of No. 1 fork shaft.

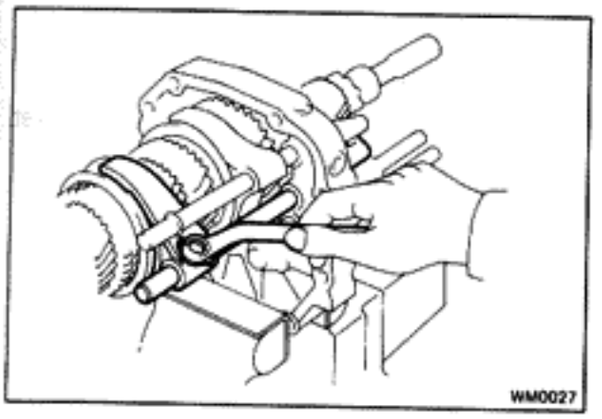

(k) Install the shift fork set bolts with lock washers.
Torque: 125 kg-cm (9 ft-lb, 12 N·m)

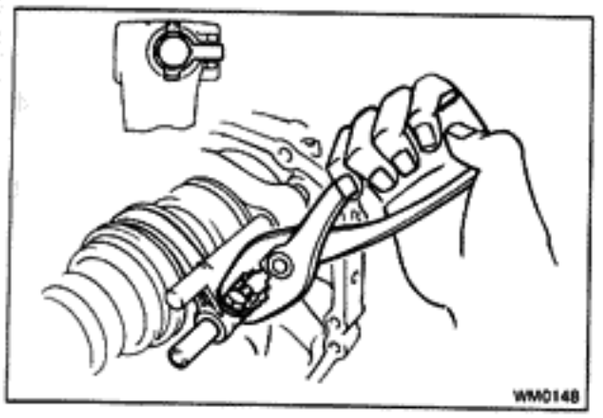

(l) Using pliers, stake the bolts with lock washers.

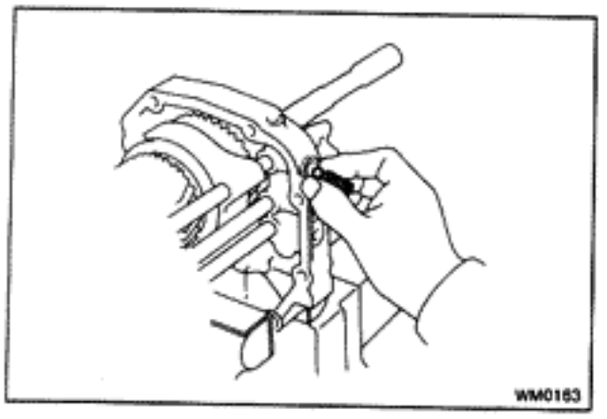

24. INSTALL LOCKING BALL AND SPRING

(a) Install the balls and springs into each hole.

(b) Apply liquid sealer to the plugs.

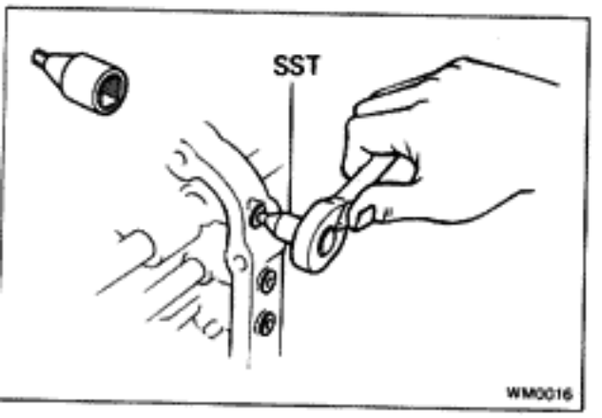

(c) Using SST, tighten the four plugs.
SST 09313-30021
Torque: 250 kg-cm (18 ft-lb, 25 N·m)

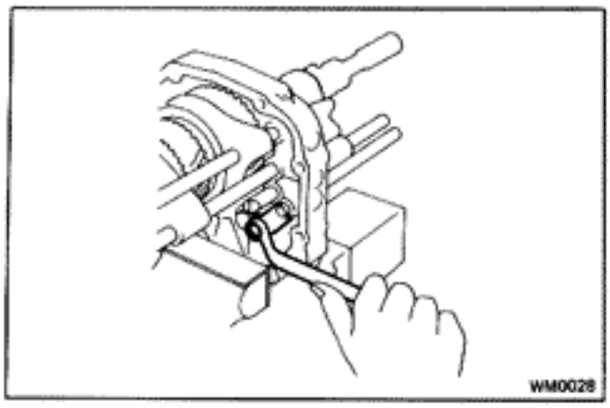

25. INSTALL REVERSE IDLER GEAR SHAFT STOPPER

Install the reverse idler gear shaft stopper and tighten the bolt.

Torque: 250 kg-cm (18 ft-lb, 25 N·m)

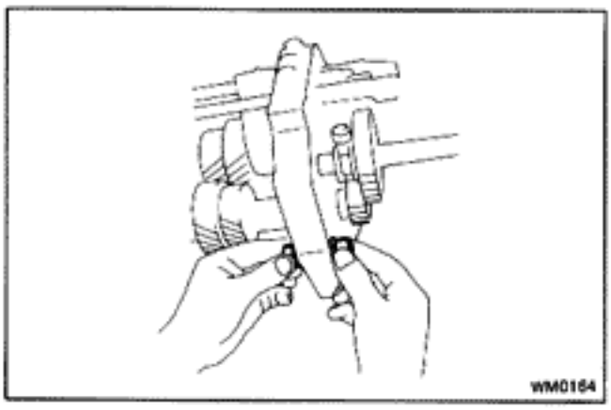

26. DISMOUNT INTERMEDIATE PLATE FROM VISE

(a) Dismount the intermediate plate from the vise.

(b) Remove the bolts, nuts, plate washers and gasket.

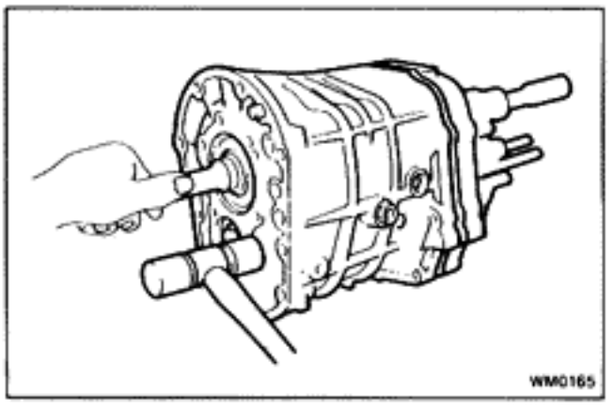

27. INSTALL TRANSMISSION CASE TO INTERMEDIATE PLATE

(a) Align each bearing outer race and each shift fork shaft end with the case holes.

(b) Using a plastic hammer, tap on the case to install it.

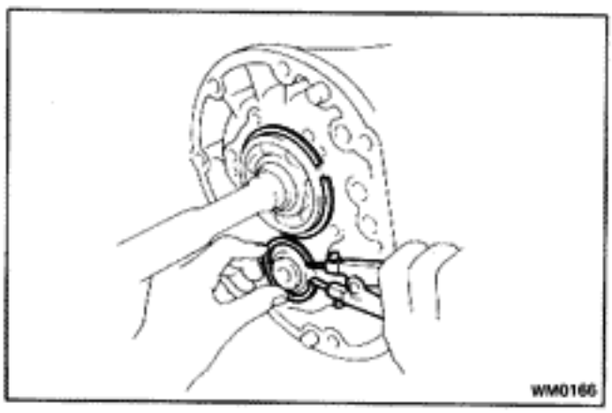

28. INSTALL BEARING SNAP RINGS

Using snap ring pliers, install the two snap rings.

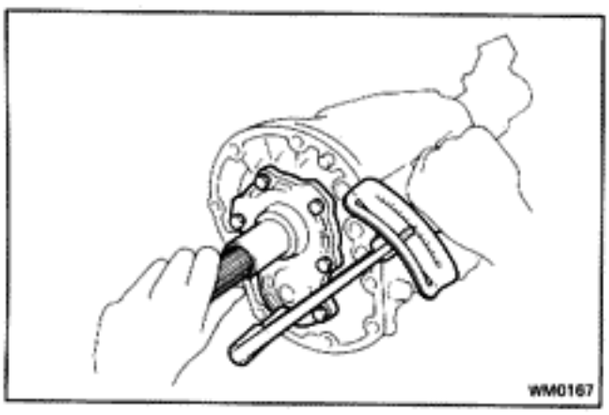

29. INSTALL FRONT BEARING RETAINER

(a) Install the bearing retainer with a new gasket.

(b) Apply liquid sealer to the bolts.

(c) Install and torque the bolts.

Torque: 250 kg-cm (18 ft-lb, 25 N·m)

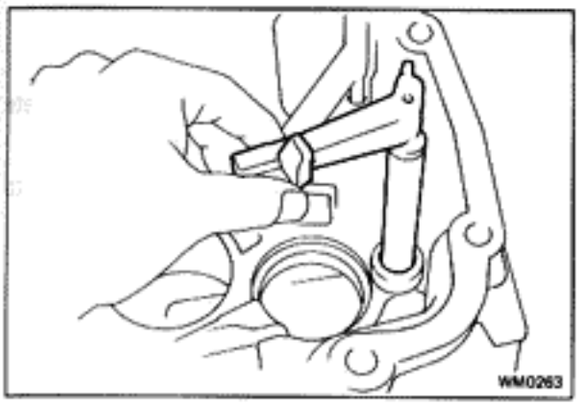

30. INSTALL EXTENSION HOUSING

(a) Place a new gasket in position on the intermediate plate.

(b) Insert shift and select lever into the extension housing.

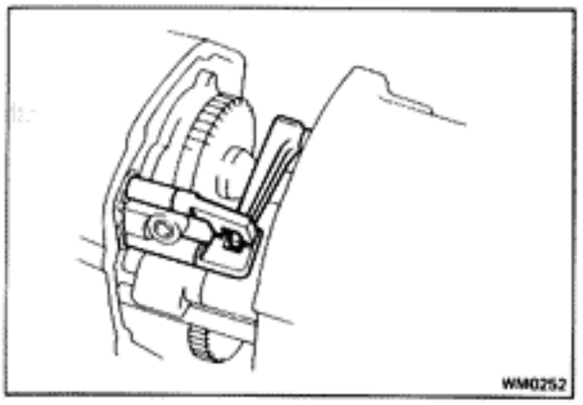

(c) Connect the shift and select lever to the shift fork shaft.

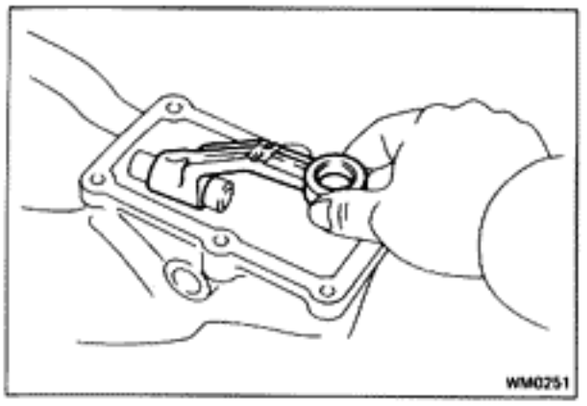

(d) Install shift lever housing to shift and select lever shaft push in the extension housing.

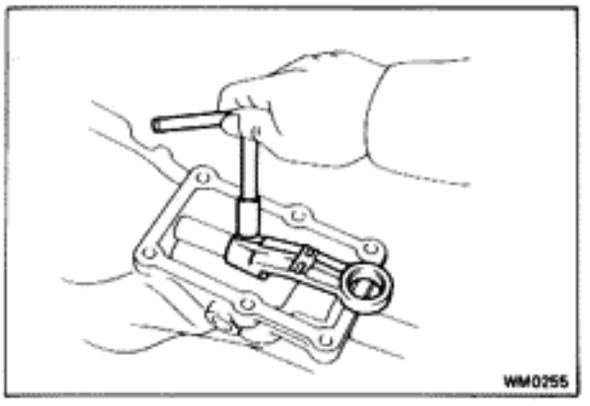

(e) Install and torque the bolt.

Torque: 400 kg-cm (29 ft-lb, 39 N·m)

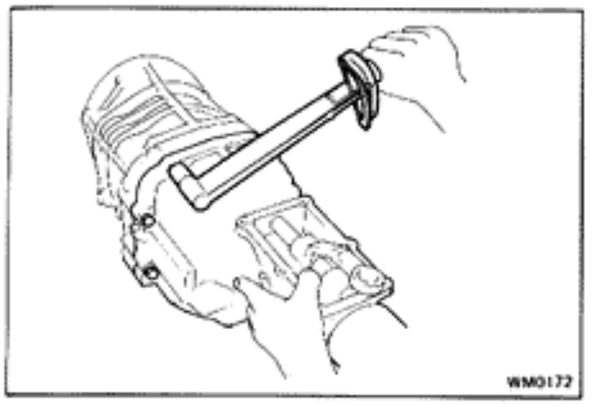

31. INSTALL AND TORQUE EXTENSION HOUSING BOLTS

Torque: 375 kg-cm (27 ft-lb, 37 N·m)

32. AFTER INSTALLING EXTENSION HOUSING, CHECK FOLLOWING ITEMS:

(a) Check to see that input shaft and output shaft rotate smoothly.

(b) Check to see that shifting can be made smoothly to all positions.

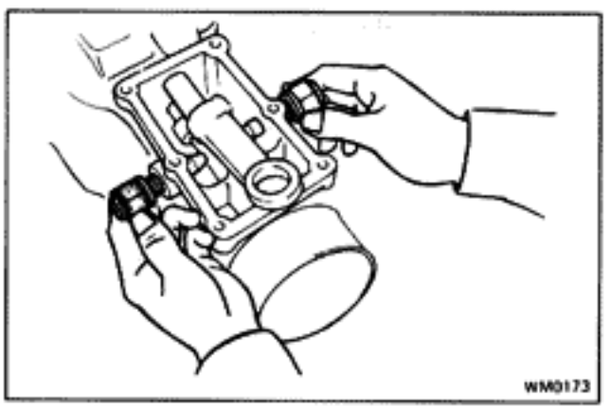

33. INSTALL RESTRICT PINS

(a) Install the restrict pins together with a gasket.

NOTE: Install the black pin on the reverse gear and 5th gear side.

(b) Torque the restrict pins.

Torque: 410 kg-cm (30 ft-lb, 40 N·m)

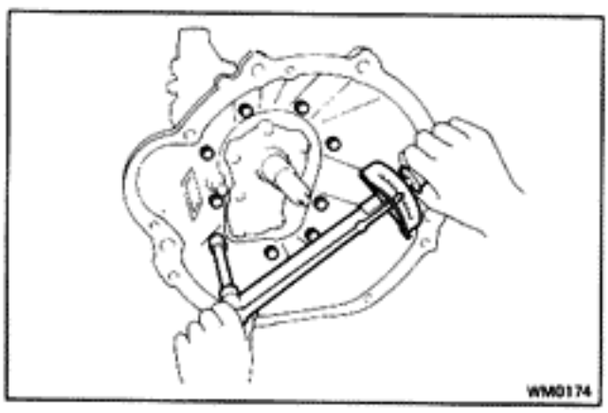

34. INSTALL CLUTCH HOUSING

(a) Install the clutch housing.

(b) Install and torque the bolts.

Torque: 375 kg-cm (27 ft-lb, 37 N·m)

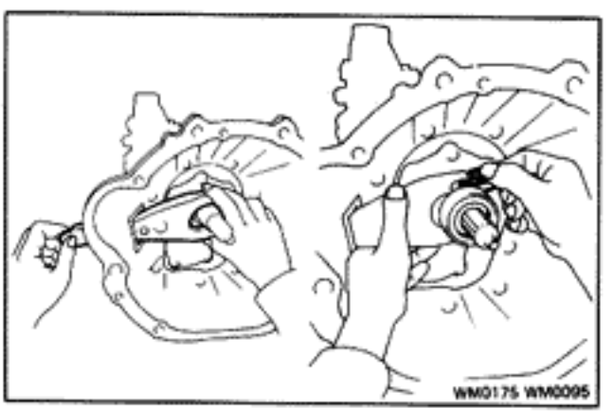

35. INSTALL RELEASE FORK AND BEARING

Apply molybdenum disulphide lithium base grease to the following parts:

- Release bearing hub inside groove
- Input shaft spline
- Release fork contact surface

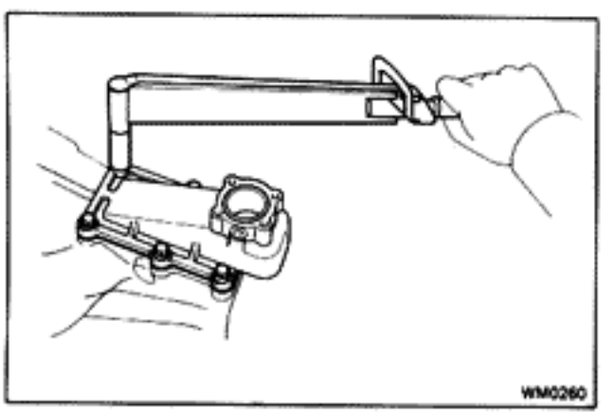

36. INSTALL SHIFT LEVER RETAINER

(a) Install the shift lever retainer with a new gasket.

(b) Install and torque the six bolts.

Torque: 185 kg-cm (13 ft-lb, 18 N·m)

37. INSTALL SPEEDOMETER DRIVEN GEAR

(a) Install the speedometer driven gear.

(b) Install the bolt with lock plate.

(c) Torque the bolt.

Torque: 130 kg-cm (9 ft-lb, 13 N·m)

38. INSTALL BACK-UP LIGHT SWITCH

(a) Install and torque the back-up light switch.

Torque: 410 kg-cm (30 ft-lb, 40 N·m)

(b) Install the wire clamp.

INSTALLATION OF TRANSMISSION

1. PLACE TRANSMISSION AT INSTALLATION POSITION, AND INSTALL TRANSMISSION MOUNT BOLTS

(a) Align the input shaft spline with the clutch disc, and push the transmission fully into position.

(b) Install the two set bolts of the upper transmission, and torque the bolts.

Torque: 650 kg-cm (47 ft-lb, 64 N·m)

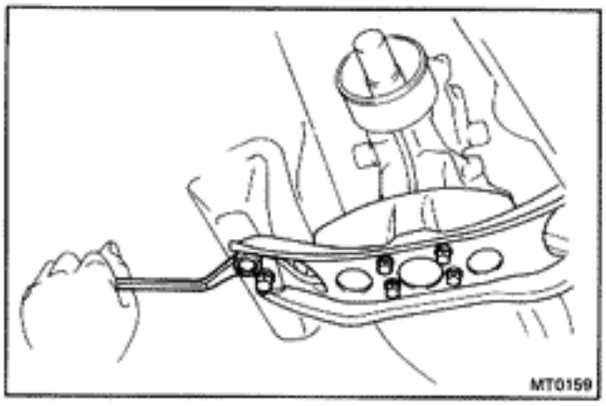

2. INSTALL ENGINE REAR MOUNTING

Install the eight bolts, and torque them.

Torque: 250 kg-cm (18 ft-lb, 25 N·m)

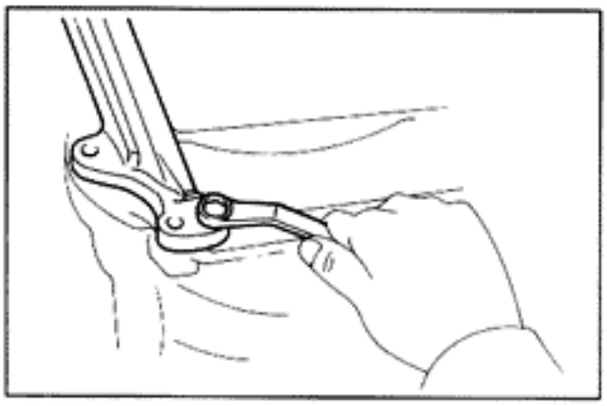

3. INSTALL TRANSMISSION BOLTS

Install and torque the bolts.

Torque: 650 kg-cm (47 ft-lb, 64 N·m)

4. INSTALL EXHAUST PIPE CLAMP BOLT

Install and torque the bolt.

Torque: 375 kg-cm (27 ft-lb, 37 N·m)

5. INSTALL STARTER

Install the starter, and torque the lower bolt.

Torque: 650 kg-cm (47 ft-lb, 64 N·m)

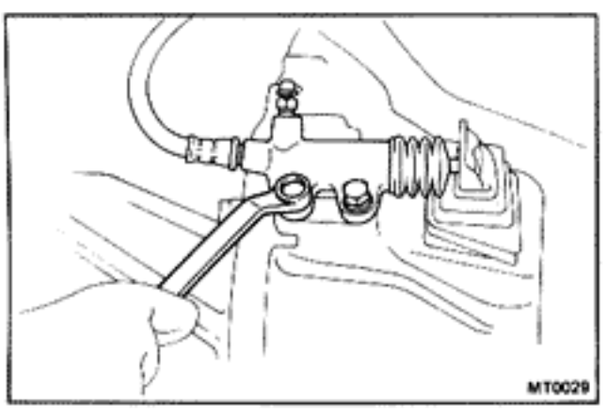

6. INSTALL CLUTCH RELEASE CYLINDER

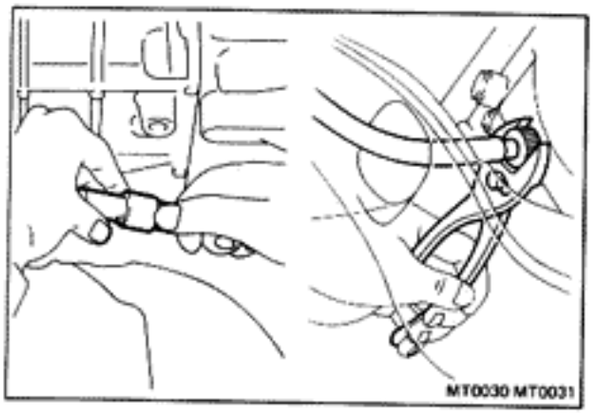

7. **CONNECT BACK-UP LIGHT SWITCH CONNECTOR**
8. **INSTALL SPEEDOMETER CABLE**

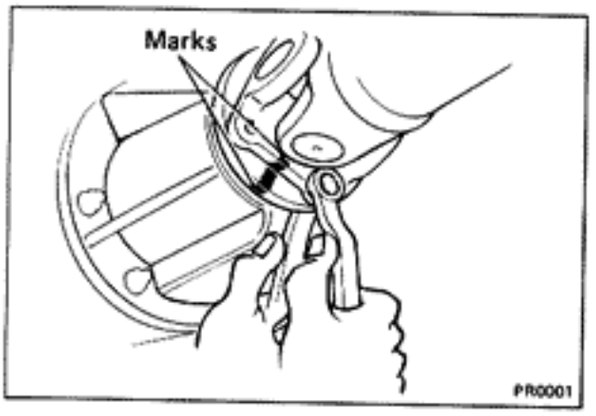

9. **INSTALL PROPELLER SHAFT**
   Install and torque the bolts.
   Torque: 430 kg-cm (31 ft-lb, 42 N·m)
10. **INSTALL STEERING GEAR HOUSING (w/PS)**
11. **FILL WITH TRANSMISSION OIL**
    Oil grade: API service GL-4 or GL-5
    SAE 75W-90 or 80W-90
    Capacity: 2.4 liters (2.5 US qts, 2.1 Imp. qts)
12. **INSTALL RADIATOR UPPER HOSE AND FILL COOLANT**
13. **CONNECT NEGATIVE BATTERY TERMINAL WIRE**

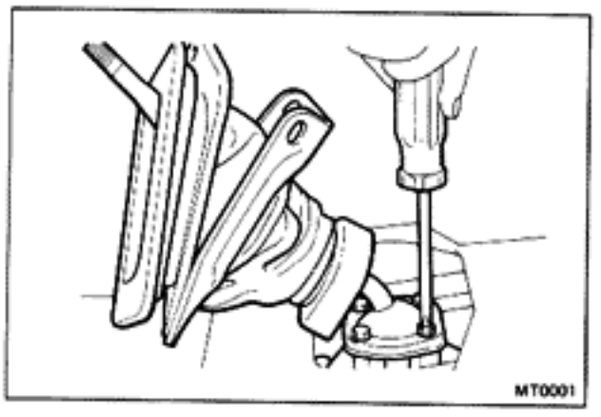

14. **INSTALL SHIFT LEVER**
15. **INSTALL CONSOLE BOX**
16. **PERFORM ROAD TEST**
    Check for abnormal noise and smooth operation.

AUTOMATIC TRANSMISSION

	Page
TROUBLESHOOTING	AT-2
ATF INSPECTION	AT-5
ADJUSTMENTS	AT-5
ELECTRIC CONTROL	AT-6
STALL TEST	AT-22
TIME LAG TEST	AT-23
HYDRAULIC TEST	AT-24
ROAD TEST	AT-25
OPERATING MECHANISM FOR EACH GEAR	AT-29
AUTOMATIC SHIFT DIAGRAM	AT-30
ON-VEHICLE REPAIR	AT-32
REMOVAL OF TRANSMISSION	AT-42
DISASSEMBLY OF TRANSMISSION	AT-45
COMPONENT GROUP DISASSEMBLY, INSPECTION AND ASSEMBLY	AT-51
Oil Pump	AT-52
Overdrive Input Shaft and Clutch	AT-55
Overdrive Case and Brake	AT-60
Front Clutch	AT-63
Rear Clutch	AT-67
Center Support Assembly	AT-69
Planetary Gear Output Shaft	AT-75
Transmission Case and Rear Brake Pistons	AT-80
Valve Body	AT-83
Extension Housing	AT-103
Torque Converter	AT-103
Electrical Parts	AT-104
ASSEMBLY OF TRANSMISSION	AT-105
INSTALLATION OF TRANSMISSION	AT-116

TROUBLESHOOTING

GENERAL NOTES

1. Troubles occuring with the ECT can be caused by either the engine, ECT electrical control or the automatic transmission itself. These three areas should be distinctly isolated before proceeding with troubleshooting.

2. Troubleshooting should begin with the simpliest operation, working up in order of difficulty, but initially determine whether the trouble lies within the engine, electrical control or transmission.

3. Proceed with the inspection as follows:

Read Diagnostic Code (See page AT-8)	Read the diagnostic code (trouble code) from overdrive indicator light or super monitor display, and perform repairs accordingly.
Preliminary Check	Check following: • Fluid level • Throttle cable mark • Shift linkage • Neutral start switch • Idling rpm ("N" or "P" range 650 rpm) • Tire inflation pressure
Stall Test (See page AT-22)	Check engine, torque converter, clutch and brake.
Time Lag Test (See page AT-23)	Check Automatic Transmission Assembly • Check clutch, brake and gear for wear.
Electric Control System Check (See page AT-6)	
Measure Line Pressure (See page AT-24)	Check valve body and fluid circuit leakage.
Road Test	Confirm if trouble lies within ATM. If noisy or vibrating, cause possibly with either compressor, engine, propeller shaft, tires, etc.

TROUBLESHOOTING (Cont'd)

Problem	Possible cause	Remedy	Page
Fluid discolored or smells burnt	Fluid contaminated	Replace fluid	MA-10
	Torque converter faulty	Replace torque converter	AT-103
	Transmission faulty	Disassemble and inspect transmission	AT-45
Vehicle does not move in any forward range or reverse	Manual linkage out of adjustment	Adjust linkage	AT-5
	Valve body or primary regulator faulty	Inspect valve body	AT-83
	Park lock pawl faulty	Inspect park pawl	AT-37
	Torque converter faulty	Replace torque converter	AT-103
	Converter drive plate broken	Replace drive plate	AT-44
	Oil pump intake screen blocked	Clean screen	AT-28
	Transmission faulty	Disassemble and inspect transmission	AT-45
Shift lever position incorrect	Manual linkage out of adjustment	Adjust linkage	AT-5
	Manual valve and lever faulty	Inspect valve body	AT-83
	Transmission faulty	Disassemble and inspect transmission	AT-45
Harsh engagement into any drive range	Throttle cable out of adjustment	Adjust throttle cable	AT-5
	Valve body or primary regulator faulty	Inspect valve body	AT-83
	Accumulator pistons faulty	Inspect accumulator pistons	AT-112
	Transmission faulty	Disassemble and inspect transmission	AT-45
Delayed 1-2, 2-3 or 3-OD up-shift, or down-shifts from 4-3 or 3-2 then shifts back to 4 or 3	Electric control faulty	Inspect electric control	AT-6
	Valve body faulty	Inspect valve body	AT-83
	Solenoid valve faulty	Inspect valve body	AT-83
Slips on 1-2, 2-3 or 3-OD up-shift, or slips or shudders on take-off	Manual linkage out of adjustment	Adjust linkage	AT-5
	Throttle cable out of adjustment	Adjust throttle cable	AT-5
	Valve body faulty	Inspect valve body	AT-83
	Solenoid valve faulty	Inspect valve body	
	Transmission faulty	Disassemble and inspect transmission	AT-45

TROUBLESHOOTING (Cont'd)

Problem	Possible cause	Remedy	Page
Drag, binding or tie-up on 1-2, 2-3 or 3-OD up-shift	Manual linkage out of adjustment	Adjust linkage	AT-5
	Valve body faulty	Inspect valve body	AT-83
	Transmission faulty	Disassemble and inspect transmission	AT-45
No Lock-up in 2nd, 3rd or OD	Electric control faulty	Inspect electric control	AT-6
	Valve body faulty	Inspect valve body	AT-83
	Solenoid valve faulty	Inspect valve body	AT-83
	Transmission faulty	Disassemble and inspect transmission	AT-45
Harsh down-shift	Throttle cable out of adjustment	Adjust throttle cable	AT-5
	Throttle cable and cam faulty	Inspect throttle cable and cam	AT-37
	Accumulator pistons faulty	Inspect accumulator pistons	AT-112
	Valve body faulty	Inspect valve body	AT-83
	Transmission faulty	Disassemble and inspect transmission	AT-45
No down-shift when coasting	Valve body faulty	Inspect valve body	AT-83
	Solenoid valve faulty	Inspect solenoid valve	AT-19
	Electric control faulty	Inspect electric control	AT-6
Down-shift occurs too quickly or late while coasting	Throttle cable faulty	Inspect throttle cable	AT-37
	Valve body faulty	Inspect valve body	AT-83
	Transmission faulty	Disassemble and inspect transmission	AT-45
	Solenoid valve faulty	Inspect solenoid valve	AT-19
	Electric control faulty	Inspect electric control	AT-6
No. OD-3, 3-2 or 2-1 kickdown	Solenoid valve faulty	Inspect solenoid valve	AT-19
	Electric control faulty	Inspect electric control	AT-6
	Valve body faulty	Inspect valve body	AT-83
No engine braking in "2" or "L" range	Solenoid valve faulty	Inspect solenoid valve	AT-19
	Electric control faulty	Inspect electric control	AT-6
	Valve body faulty	Inspect valve body	AT-83
	Transmission faulty	Disassemble and inspect transmission	AT-45
Vehicle does not hold in "P"	Manual linkage out of adjustment	Adjust linkage	AT-5
	Parking lock pawl cam and spring faulty	Inspect cam and spring	AT-37

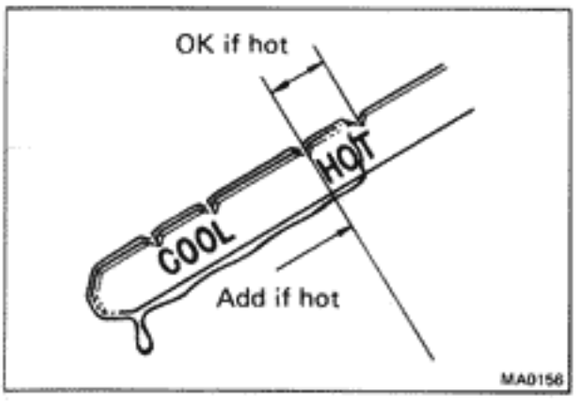

ATF INSPECTION

1. **CHECK FLUID LEVEL (See page MA-13)**
2. **CHECK FLUID CONDITION**
   If the ATF smells burnt or is black, replace it.
3. **REPLACE ATF (See page MA-10)**

ADJUSTMENTS

ADJUSTMENT OF THROTTLE CABLE

1. **DEPRESS ACCELERATOR PEDAL ALL THE WAY AND CHECK THAT THROTTLE VALVE OPENS FULLY**
   If the throttle valve does not open fully, adjust the accelerator link.
2. **FULLY DEPRESS ACCELERATOR**
3. **LOOSEN ADJUSTMENT NUTS**
4. **ADJUST THROTTLE CABLE**
   (a) Adjust the cable housing so that the distance between the end of the boot and the stopper on the cable is correct.
   Distance: 0 — 1 mm (0 — 0.04 in.)
   (b) Tighten the adjusting nuts.
   (c) Recheck the adjustments.

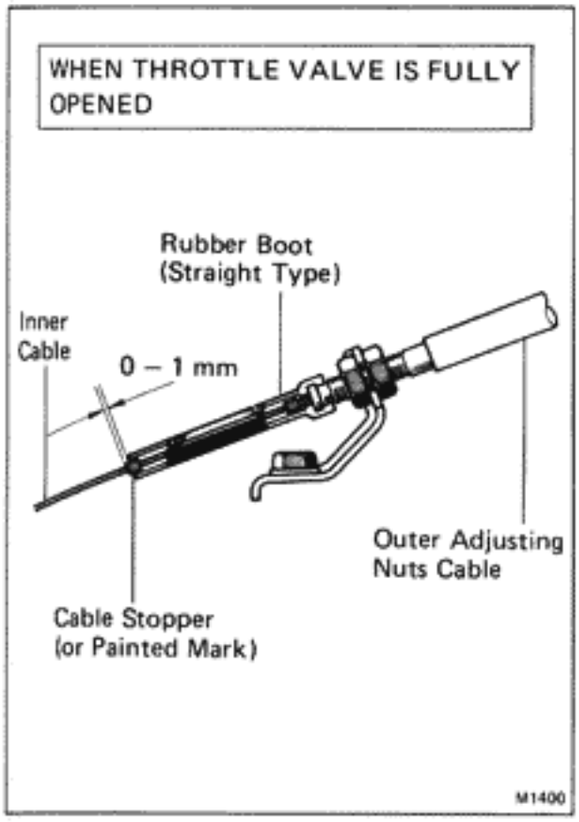

ADJUSTMENT OF FLOOR SHIFT LINKAGE

ADJUST SHIFT LINKAGE

(a) Loosen the nut on the shift linkage.
(b) Push the manual lever fully rearward.
(c) Return the lever two notches to the NEUTRAL position.
(d) Set the shift selector in "N".
(e) While holding the selector lightly toward the "R" range side, tighten the shift linkage nut.

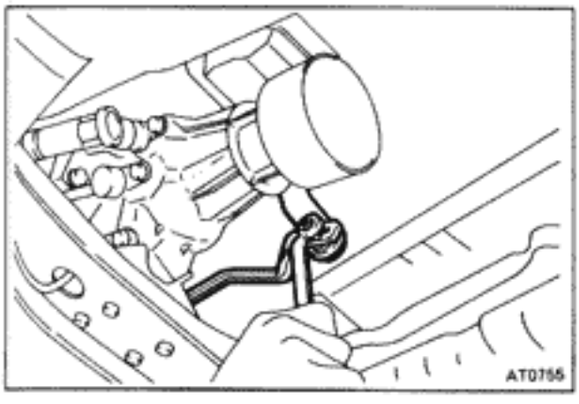

ADJUSTMENT OF NEUTRAL START SWITCH

If the engine will start with the shift selector in any range other than "N" or "P", adjustment is required.

1. **LOOSEN NEUTRAL START SWITCH BOLT AND SET SHIFT SELECTOR IN "N" RANGE**
2. **ADJUST NEUTRAL START SWITCH**
   (a) Disconnect the neutral start switch connector.
   (b) Connect the ohmmeter between the terminals.
   (c) Adjust the switch to the point where there is continuity between N and B terminals.
   (d) Connect the neutral start switch connector.
3. **TORQUE NEUTRAL START SWITCH BOLT**
   Torque: 55 kg-cm (48 in.-lb, 5.4 N·m)

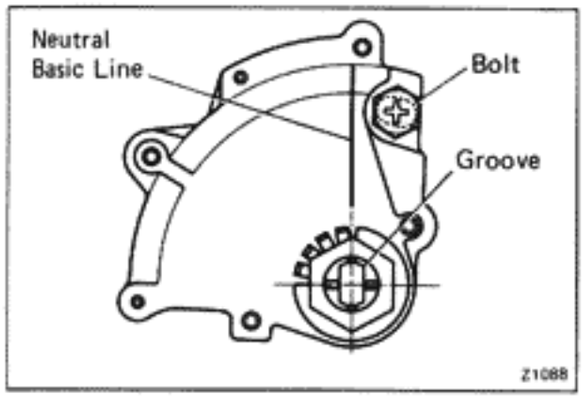

ELECTRIC CONTROL

CIRCUIT

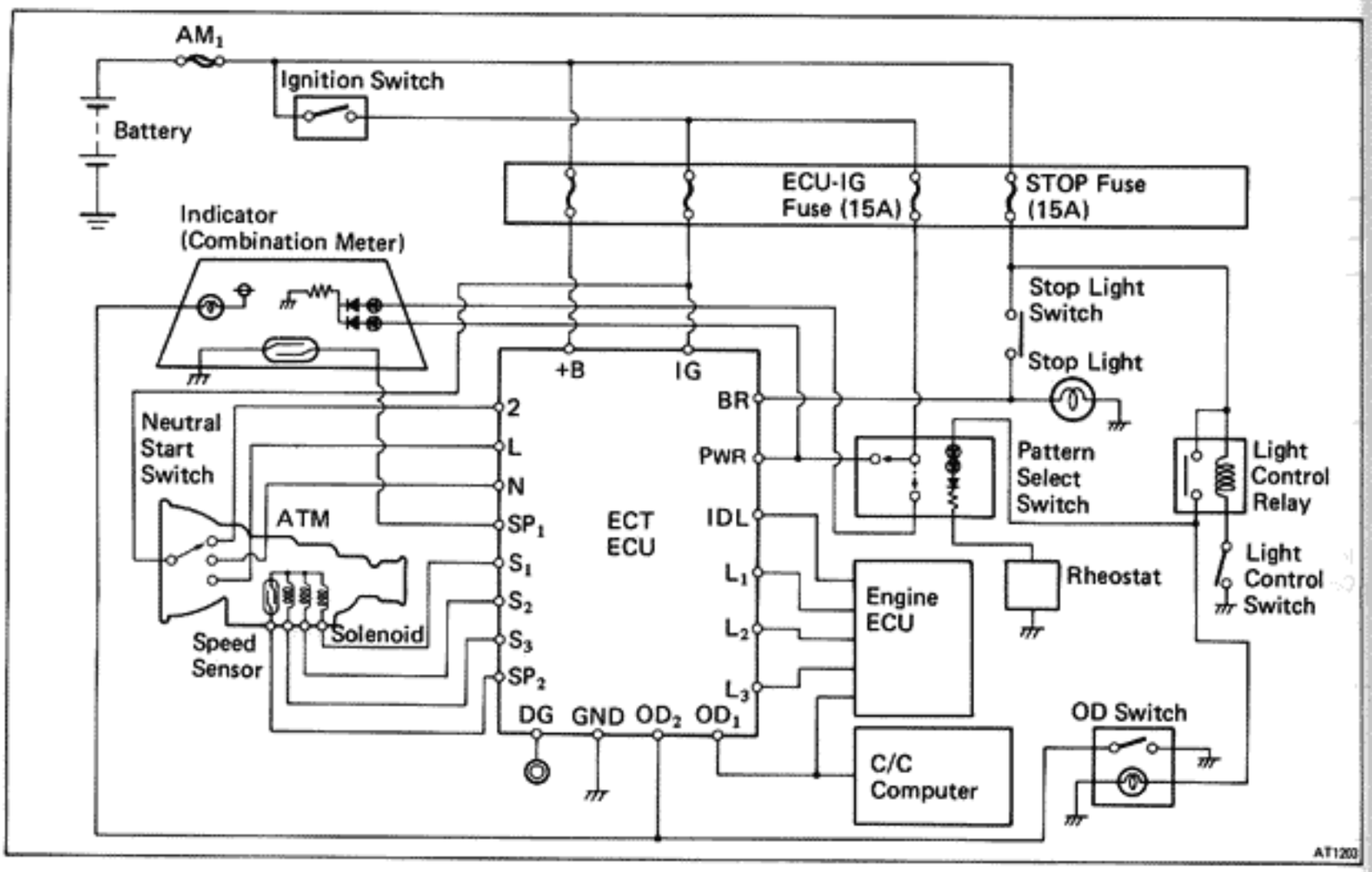

COMPONENTS

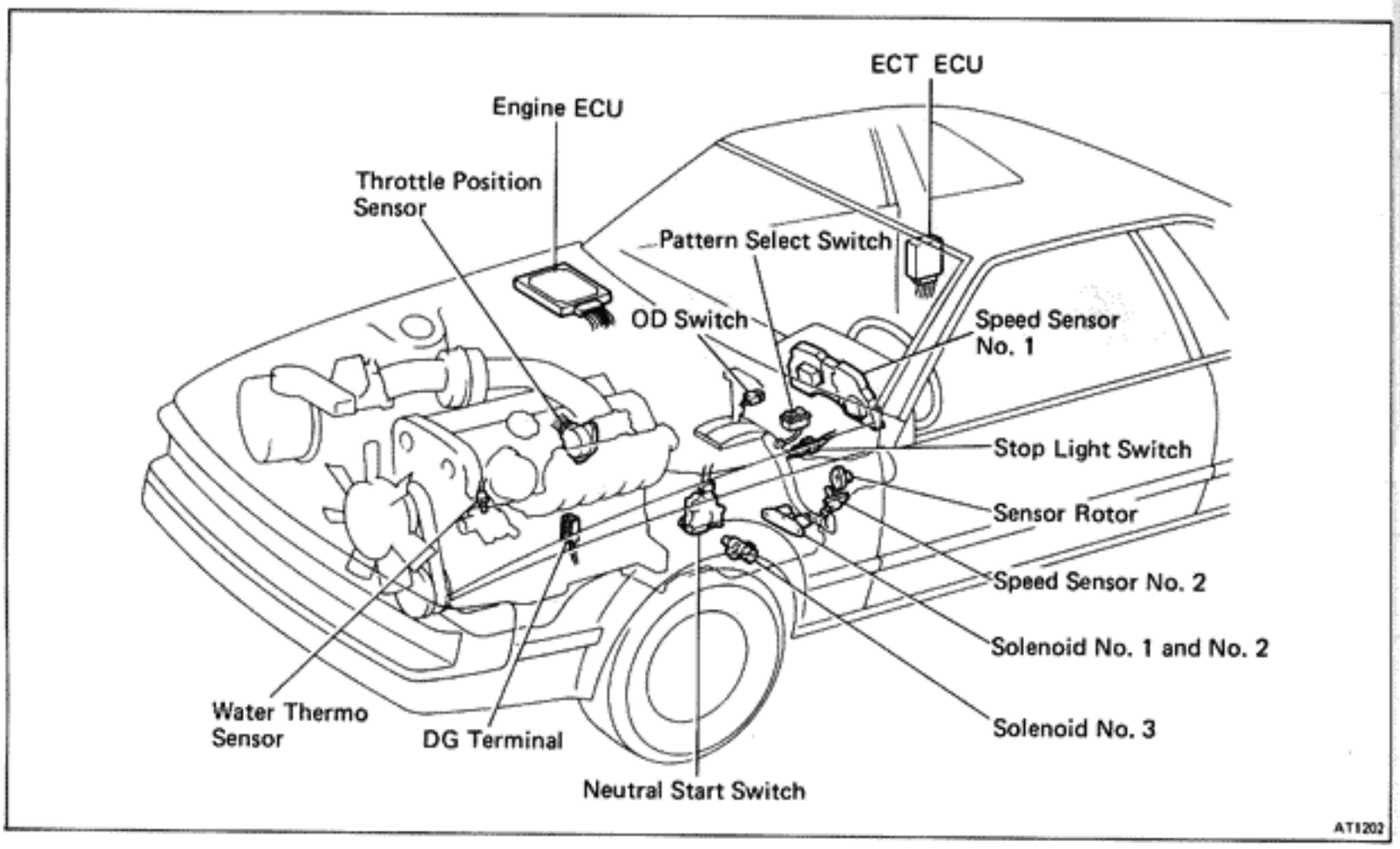

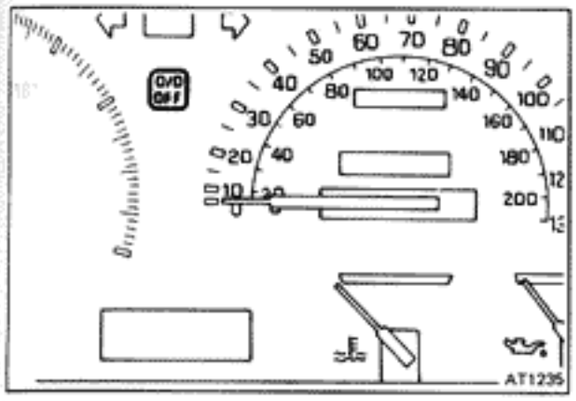

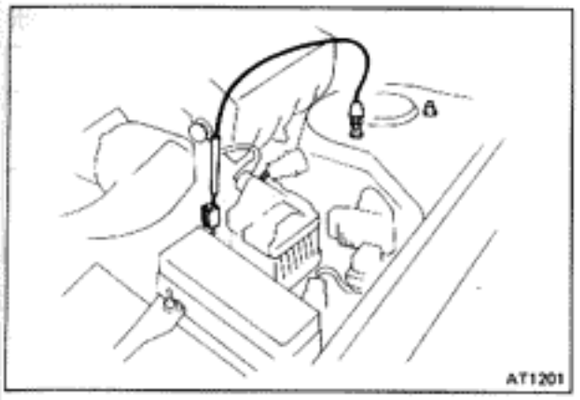

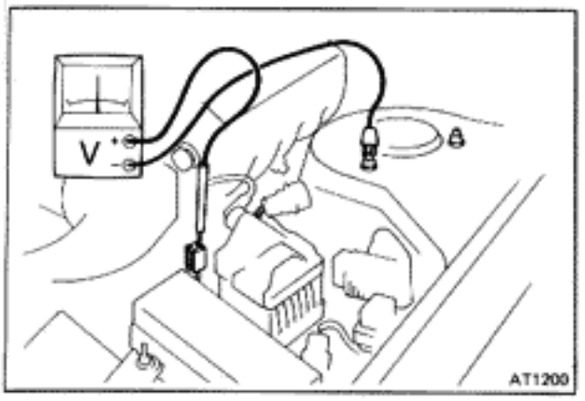

TROUBLESHOOTING OF ELECTRICAL CONTROL CIRCUIT

Description

1. A self-diagnosis function is built into the electrical control system. Warning is indicated by the overdrive OFF indicator light.

   NOTE: Warning and diagnostic codes can be read only when the overdrive switch is ON. If OFF, the overdrive light is lit continuously and will not blink.

   (a) If a malfunction occurs within the speed sensors (No. 1 or 2) or solenoids (No.1 or 2), the overdrive OFF light will blink to warn the driver.

   However, there will be no warning of a malfunction with solenoid No. 3.

   (b) The diagnostic code can be read by the number of blinks of the overdrive indicator light when DG terminal and body ground are short-circuited. (See page AT-8)

   (c) The throttle position sensor or brake signal are not indicated, but inspection can be made by checking the voltage at DG terminal.

   (d) The signals to each gear can be checked by measuring the voltage at DG terminal.

2. The diagnostic code (trouble code) is retained in memory by the CPU (of ECT ECU) and due to back-up voltage, is not canceled out when the engine is turned off. Consequently, after repair, it is necessary to turn the ignition switch off and remove the fuse STOP (15A) or disconnect the ECT ECU connector to cancel out the diagnostic (trouble) code. (See page AT-10)

   NOTE:

   - Low battery voltage will cause faulty operation of the diagnosis system. Therefore, always check the battery first.
   - Use a voltmeter and ohmmeter that have an impedance of at least 10 KΩ/V.

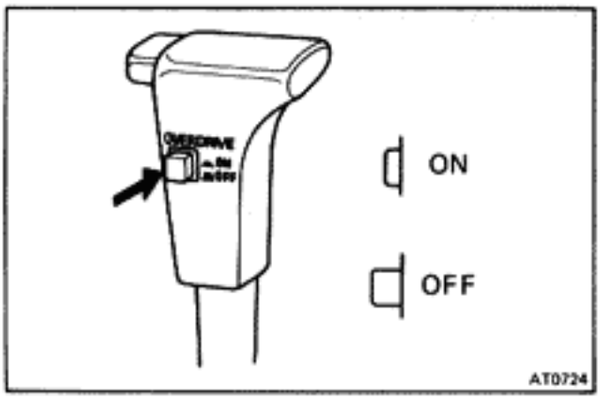

OUTPUT OF DIAGNOSTIC CODE

1. Turn the ignition switch and OD switch ON. Do not start the engine.

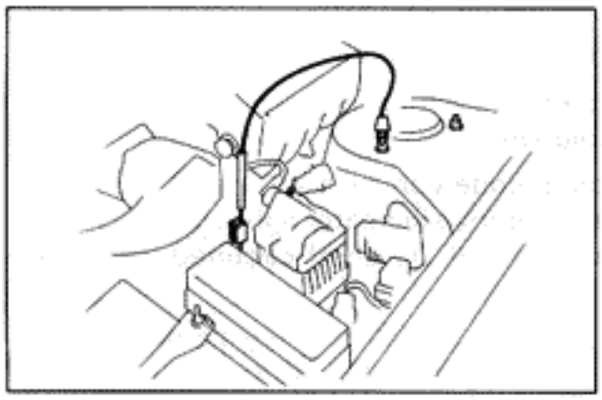

2. Using a service wire, short the DG terminal and body ground.

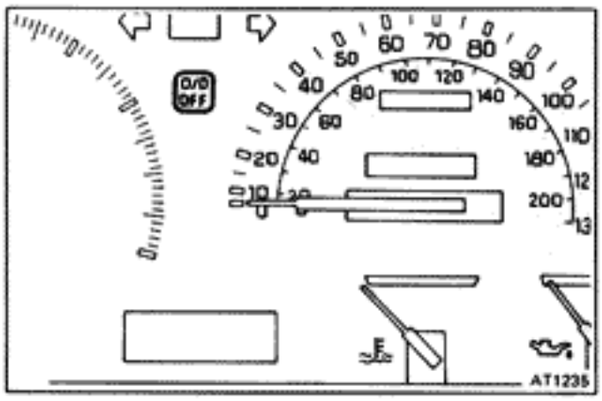

3. Read the diagnostic code as indicated by the number of flashes of the "OD OFF light".

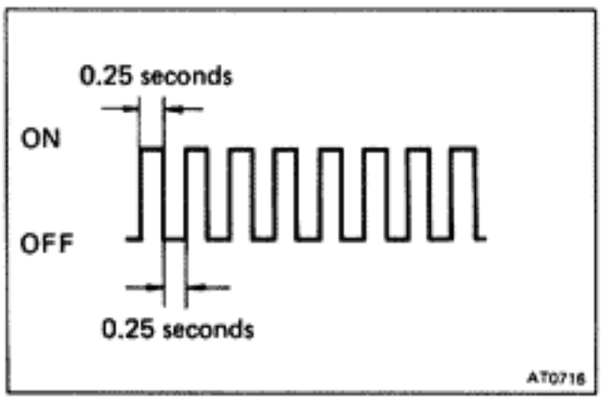

Diagnostic Codes Indication

(a) If the system is operating normally (no malfunction), the light will blink once every 0.25 seconds.

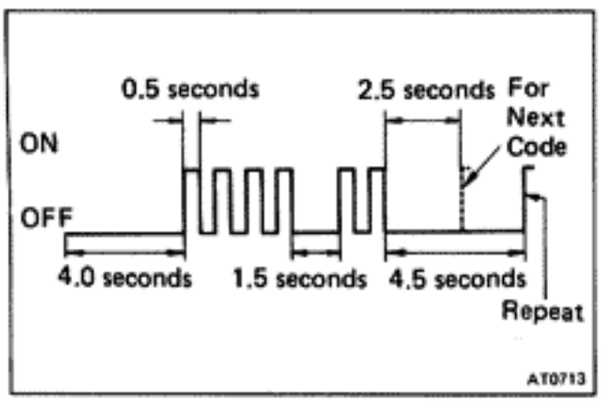

(b) In event of a malfunction, the light will blink once every 0.5 seconds. The first number of blinks will equal the first digit of a two digit diagnostic code.

After a 1.5 seconds pause, the 2nd number of blinks will equal the 2nd number of a two digit diagnostic code. If there are two or more codes, there will be a 2.5 seconds pause between each.

NOTE: In event of a number of trouble codes, indication will begin from the smaller value and continue in order to the larger.

4. After the diagnosis check, remove the service wire from the DG terminal.

Diagnostic Code

Code No.	Light Pattern	Diagnosis System
42		Defective No. 1 speed sensor (in combination meter) Severed wire harness or short circuit
61		Defective No. 2 speed sensor (in ATM) Severed wire harness or short circuit
62		Severed No. 1 solenoid or short circuit Severed wire harness or short circuit
63		Severed No. 2 solenoid or short circuit Severed wire harness or short circuit
64		Severed No. 3 solenoid or short circuit Severed wire harness or short circuit

NOTE: If codes 62, 63 or 64 appear, there is an electrical malfunction with the solenoid.
Causes due to mechanical failure such as a stuck switch will not appear.

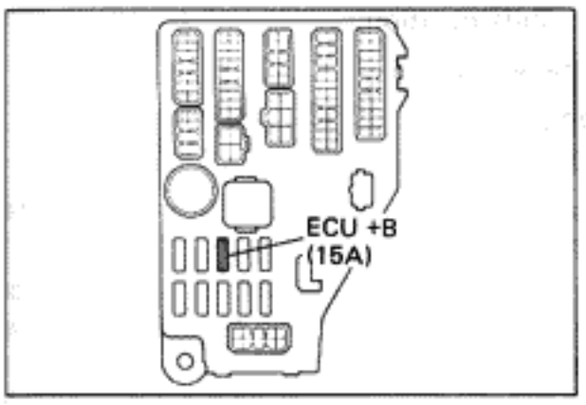

CANCEL OUT DIAGNOSTIC CODE

1. After repair of the trouble area, the diagnostic code retained in memory by the ECT ECU must be canceled out by removing the fuse ECU +B (15A) for 10 seconds or more depending on ambient temperature (the lower the temperature, the longer the fuse must be left out) with the ignition switch off.

   NOTE:

   - Cancellation can also be done by removing the battery negative (—) terminal, but in this case other memory systems (clock, radio ETR, etc.) will also be canceled out.
   - The diagnostic code can also be canceled out by disconnecting the ECT ECU connector.
   - If the diagnostic code is not canceled out, it will be retained by the ECT ECU and appear along with a new code in event of future trouble.

2. After cancellation, perform a road test, if necessary, to confirm that a "normal code" is now read on the OD OFF light.

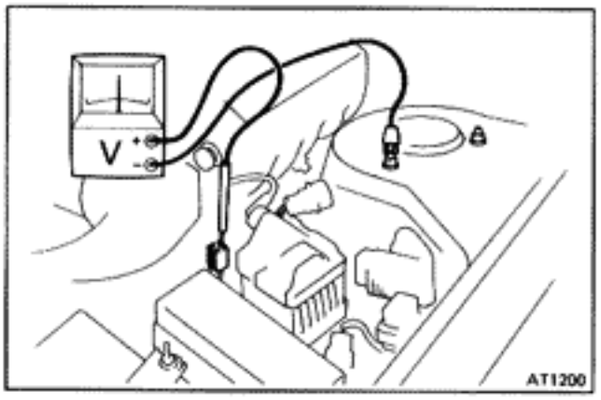

INSPECT TERMINAL ECT VOLTAGE

1. Inspect the throttle position sensor system.
   (a) Turn the ignition switch to ON. Do not start the engine.
   (b) Connect a voltmeter to the DG terminal and body ground.

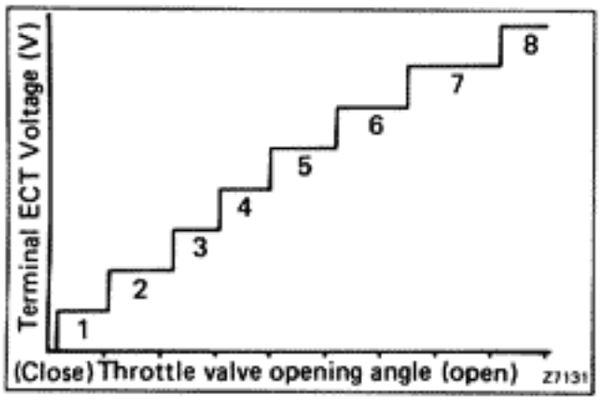

   (c) While slowly depressing the accelerator pedal, check that DG terminal voltage rises in sequence.

If the voltage is in proportion to the throttle opening angle and does not change, there is a malfunction with the throttle position sensor or circuit.

2. Inspect brake signal.
   (a) Depress the accelerator pedal to where DG terminal indicates 8V.
   (b) Depress the brake pedal and check the voltage reading for DG terminal.

Brake pedal depressed ... 0V
Brake pedal released 8V

If not as indicated, there is a malfunction with either the stop light switch or circuit.

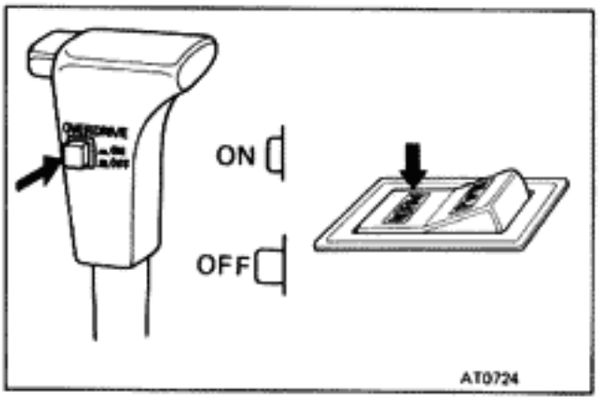

3. Inspect each up shift position.
   (a) Warm up the engine.

Coolant temperature: 80°C (176°F)

   (b) Turn the OD switch ON.
   (c) Place the pattern select switch in "Normal" and the shift selector in "D" range.
   (d) During a road test (above 10 km/h or 6 mph) check that voltage at the DG terminal is as indicated below for each up-shift position.

Terminal ECT (V)	Gear position
0	1st
2	2nd
3	2nd Lock-up
4	3rd
5	3rd Lock-up
6	OD
7	OD Lock-up

(e) If voltage rises from 0V to 7V in the sequence shown, the control system is okay.

(f) The voltage could rise anywhere between 0V — 8V before the vehicle reaches 10 km/h or 6 mph in first gear. The voltage jump depends on what percent the throttle valve is opened. This is a normal reading.
Above 10 km/h or 6 mph, the voltmeter indicates the current gear.

NOTE: Determine the gear position by a light shock or change in engine rpm when shifting.

TROUBLESHOOTING

NOTE:

- If diagnostic code No. 42, 61, 62 or 63 occur, the overdrive indicator light will begin to blink immediately to warn the driver. However, an impact or shock may cause the blinking to stop although the code will still be retained in the ECT ECU memory until canceled out.
- There is no warning for diagnostic code No. 64.
- In event of a simultaneous malfunction of both speed sensors No. 1 and No. 2, no diagnostic code will appear and fail-safe will not function. However, when driving in "D" range, the transmission will not up-shift from first gear regardless of the vehicle speed.

Trouble No. 1 Blinking overdrive indicator light (while driving)

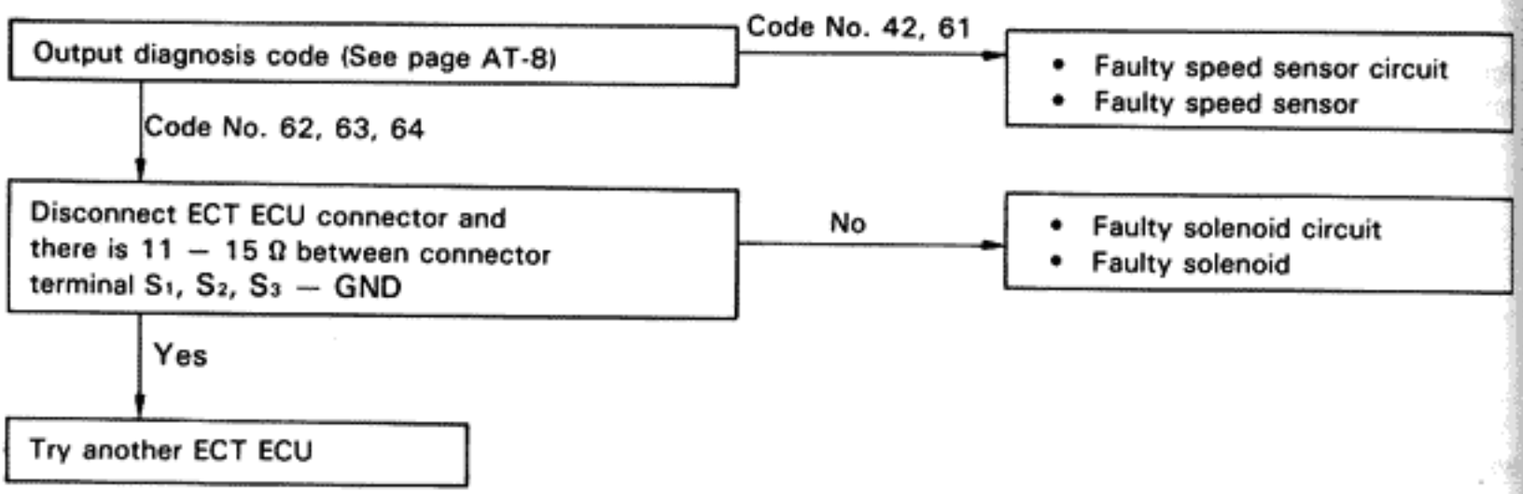

Trouble No. 2 No shifting

Warm up engine
Coolant temp: 80°C (176°F)
ATF temp: 50 — 80°C (122 — 176°F)

↓

Output diagnostic code
(See page AT-8)

Diagnosis code → Proceed to trouble No. 1 (AT-12)

↓ No indicate

Connect a voltmeter to the DG terminal and body.
Does DG terminal voltage vary with changes in throttle opening?

Yes ↓

No →

Is voltage between ECT ECU terminals BR and GND as follows?
0V: Brake pedal released
12V: Brake pedal depressed

No → Brake signal faulty

↓ Yes

- Computer power sourse and earth faulty
- Throttle position signal faulty
- DG terminal wire open or short

Disconnect ECT ECU connector and road test.
Does the transmission operate in the respective gear when in the following ranges while driving?
D range ..... Overdrive
2 range ..... 3rd gear
L range ..... 1st gear

No → Transmission faulty

↓ Yes

Continued on page AT-14

Continued from page AT-13

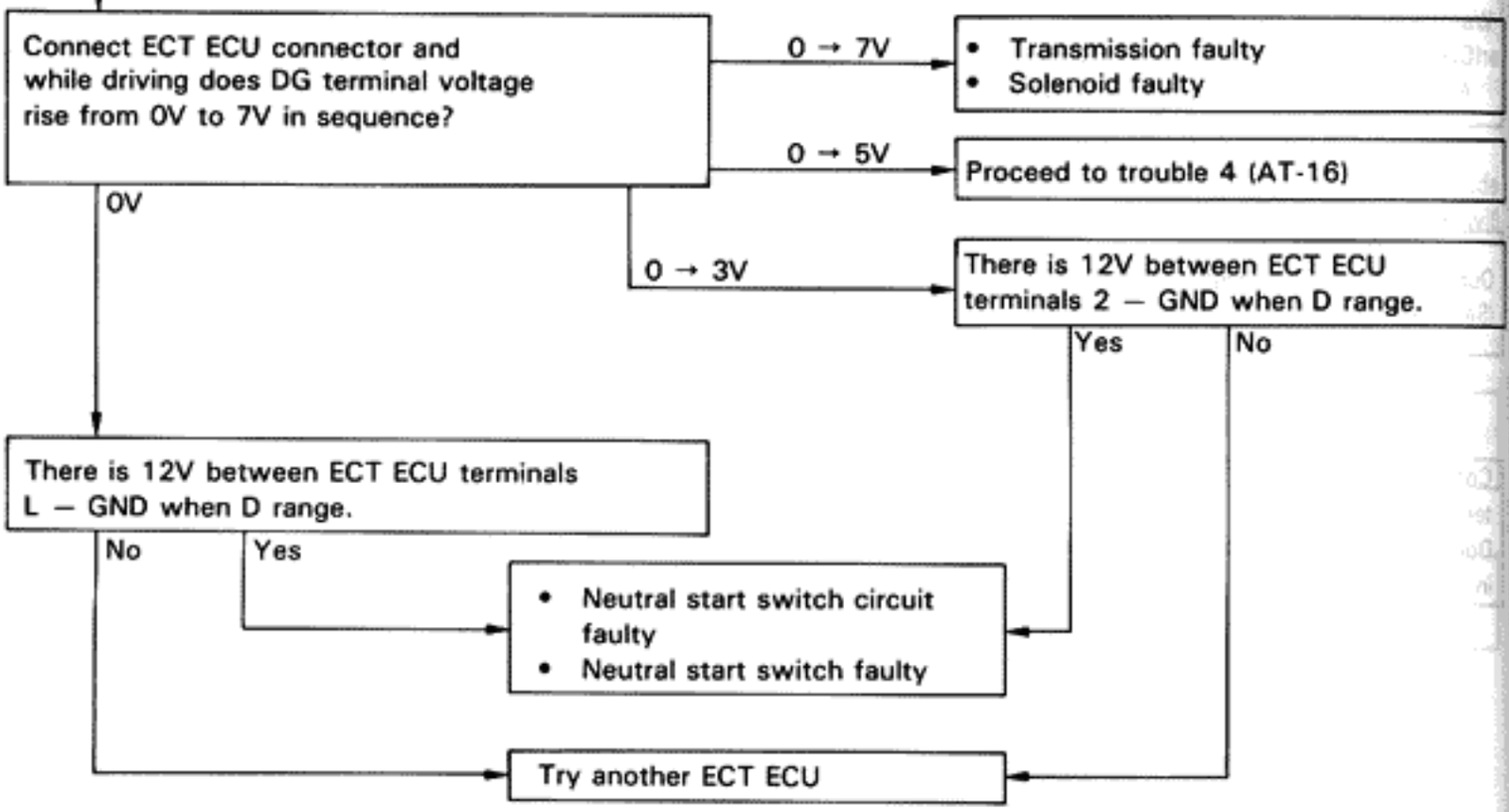

Trouble No. 3 Shift point too high or too low

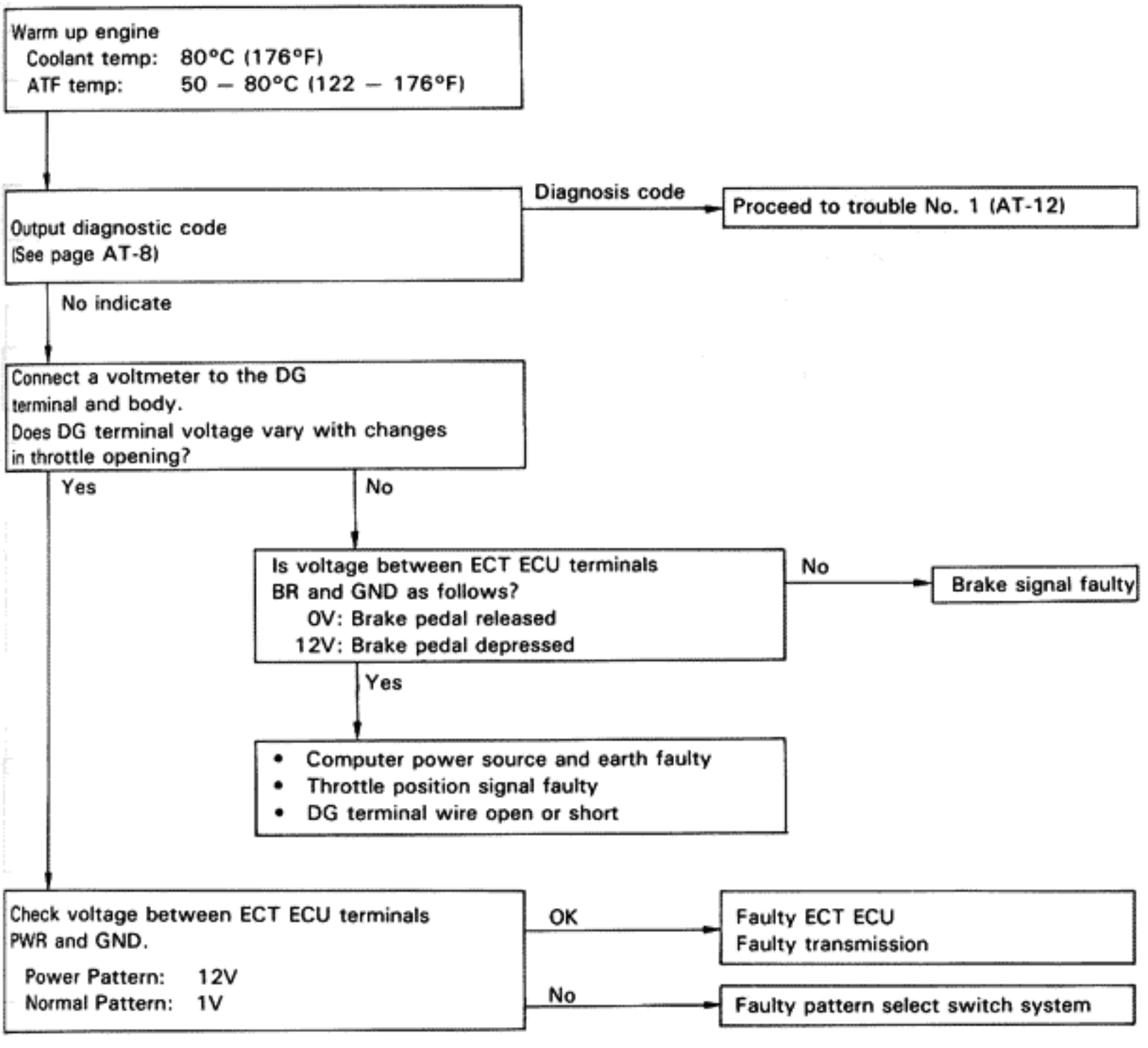

Trouble No. 4 No up-shift to overdrive (After warm-up)

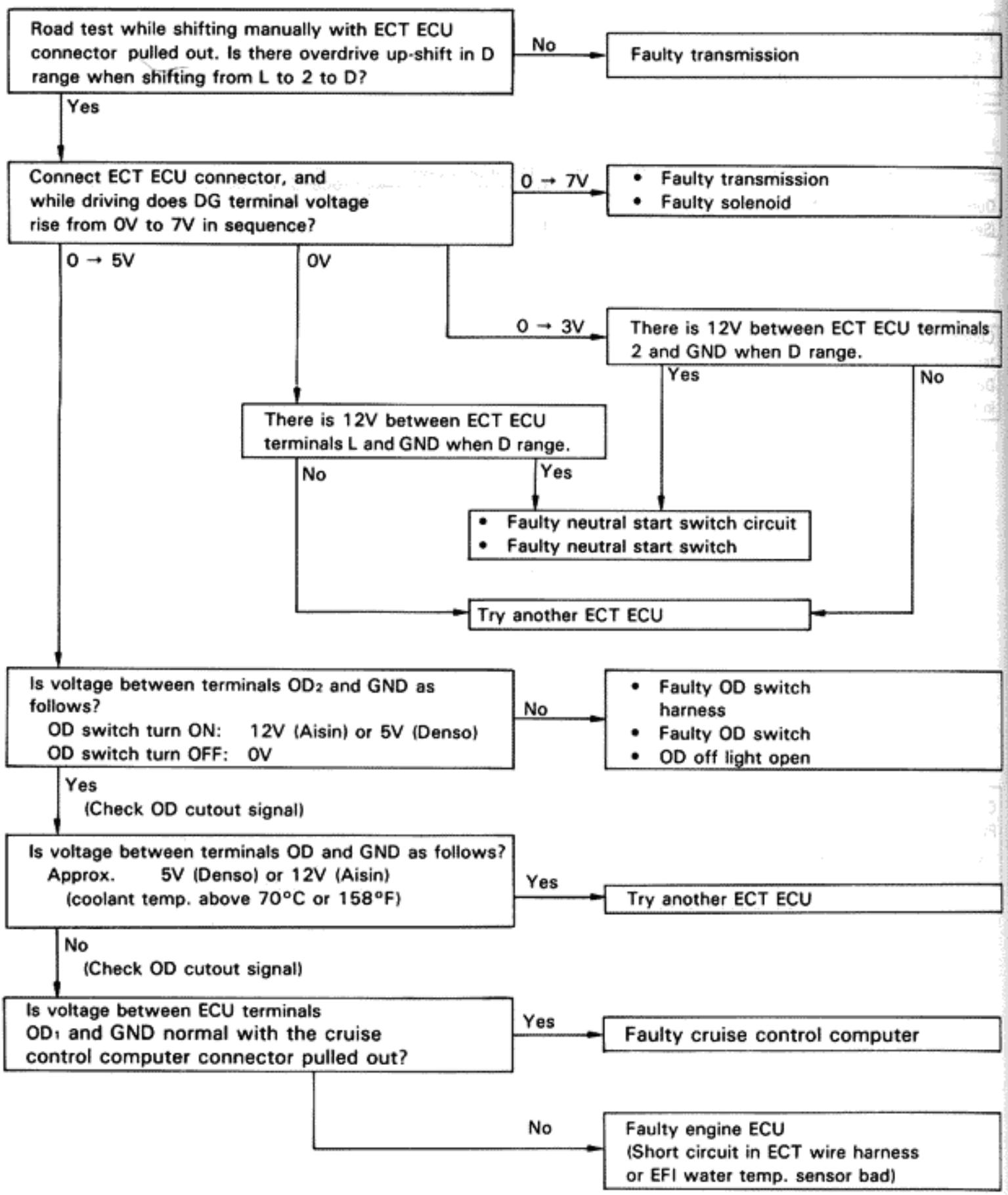

Trouble No. 5 No lock-up (After warm-up)

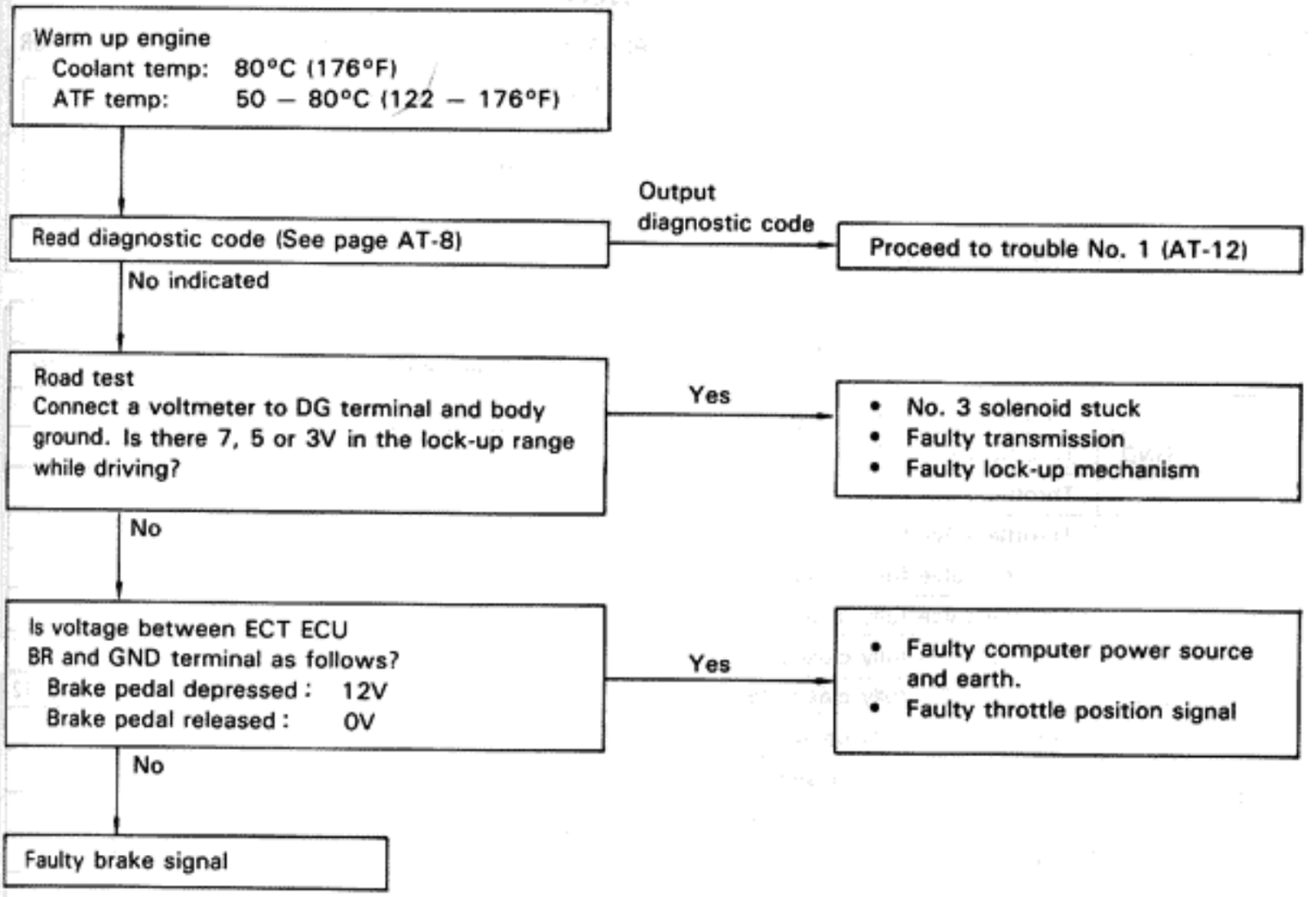

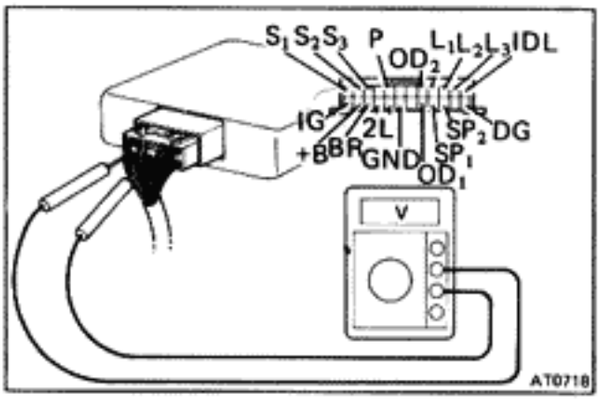

INSPECTION OF ELECTRIC CONTROL COMPONENTS

1. INSPECT VOLTAGE OF ECT COMPUTER CONNECTOR

(a) Remove the glove box.

(b) Turn on the ignition switch.

(c) Measure the voltage at each terminal.

Terminal	Measuring condition	Voltage (V)	
		DENSO type computer	AISIN type computer
L_1 — GND	Throttle valve fully closed	5	12
	Throttle valve fully closed to fully open	5 to 0	12 to 0
	Throttle valve fully open	0	←
L_2 — GND	Throttle valve fully closed	5	12
	Throttle valve fully closed to fully open	5 to 0 to 5	12 to 0 to 12
	Throttle valve fully open	5	12
L_3 — GND	Throttle valve fully closed	5	12
	Throttle valve fully closed to fully open	5 to 0 to 5 to 0 to 5	12 to 0 to 12 to 0 to 12
	Throttle valve fully open	5	12
IDL — GND	Throttle valve fully closed	0	←
	Throttle valve opening above 1.5°	12	←
SP_1 — GND	Standing still	5 or 0	12 or 0
	Engine running, vehicle moving	2.5	6
BR — GND	When brake pedal is depressed	12	←
	When brake pedal is not depressed	0	←
2 — GND	2 range	9 to 16	←
	Except 2 range	0 to 2	←
L — GND	L range	9 to 16	←
	Except L range	0 to 2	←
S_1 — GND	—	12	←
S_2, S_3 — GND	—	0	←
OD_1 — GND	Coolant temp. below 65°C (149°F)	0	←
	Coolant temp. above 75°C (167°F)	5	12
OD_2 — GND	OD main switch turn ON	5	12
	OD main switch turn OFF	0	←
IG — GND	Standing still	12	←
SP_2 — GND	Standing still	5 or 0	←
	Engine running	4	←
PWR — GND	PWR pattern	12	←
	Except PWR pattern	0 to 2	←
+B — GND	—	12	←

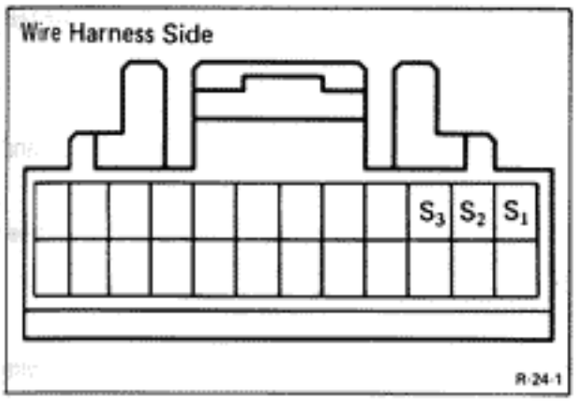

2. INSPECT SOLENOID

(a) Disconnect the connector from the ECT ECU.

(b) Measure the resistance between S_1, S_2, S_3 and ground.

STD: 11 — 15Ω

(c) Apply battery voltage to the solenoid. At this time, check that an operation noise can be heard from the solenoid.

NOTE: If there is foreign matter in the solenoid valve, there will be no fluid control even with solenoid operation.

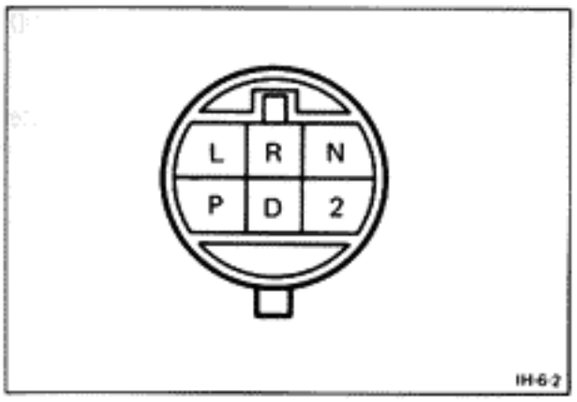

3. INSPECT NEUTRAL START SWITCH

(a) Shift the lever into the L or 2 range.

(b) Disconnect the connector near the starter motor.

(c) Check that there is continuity between L, 2 and ground.

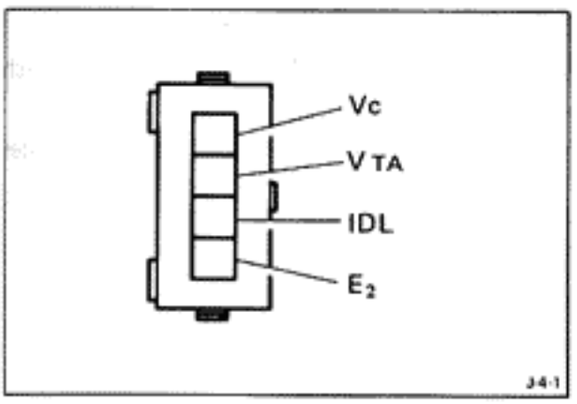

4. INSPECT THROTTLE POSITION SENSOR

Using an ohmmeter, check the resistance between each terminal.

Terminal	Throttle valve condition	Resistance (kΩ)
IDL — E_2	Fully closed	0
	Open	Infinity
V_C — E_2	—	3 — 7
V_{TA} — E_2	Fully closed	0.2 — 0.8
	Fully open	3.3 — 10

5. INSPECT BRAKE SIGNAL

Check that the brake light comes on when the brake pedal is depressed.

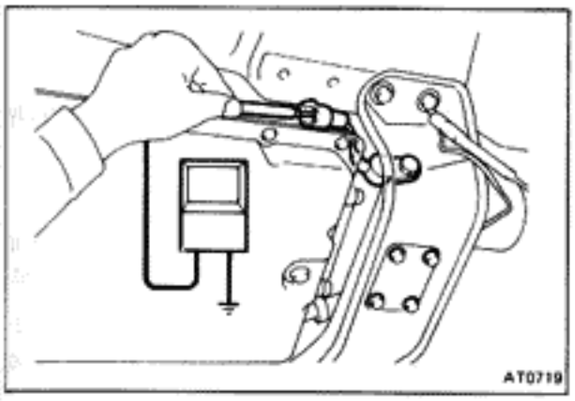

6. INSPECT SPEED SENSOR NO.2

(a) Jack up the rear wheel on one side.

(b) Connect an ohmmeter between the connector and ground.

(c) Spin the wheel and check that the meter needle deflects from 0Ω to ∞Ω.

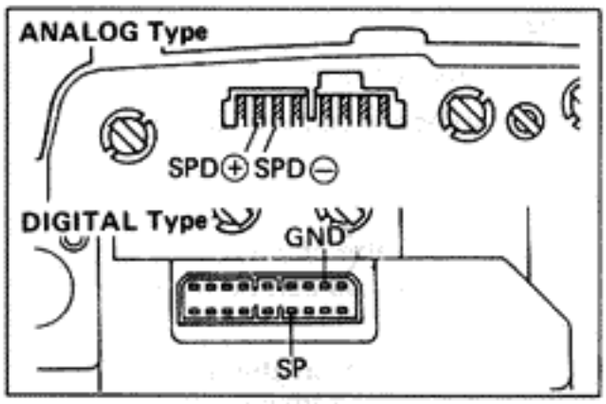

7. INSPECT SPEED SENSOR NO.1 IN COMBINATION METER

[Analog Type]

(a) Remove the combination meter.

(b) Connect an ohmmeter between terminals SPD ⊕ and SPD ⊖.

(c) Revolve the meter shaft and check that the meter needle repeatedly deflects from 0Ω to ∞Ω.

[Digital Type]

(a) Remove the combination meter with connected wire harness.

(b) Connect a voltmeter between terminals SP and GND.

(c) Turn the ignition switch ON.

(d) Revolve the meter shaft and check that the voltmeter needle repeatedly defects from 0V to 2V.

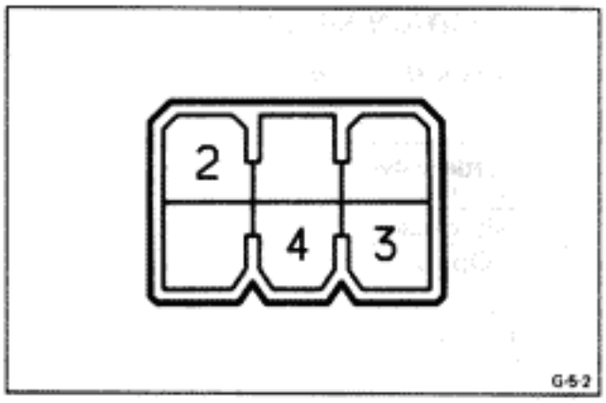

8. INSPECT PATTERN SELECTION SWITCH

Inspect that there is continuity between 2 and each terminal.

NOTE: As there are diodes inside, be careful of the tester probe polarity.

Terminal / Pattern	2	4	3
NORM	○	○	
PWR	○		○

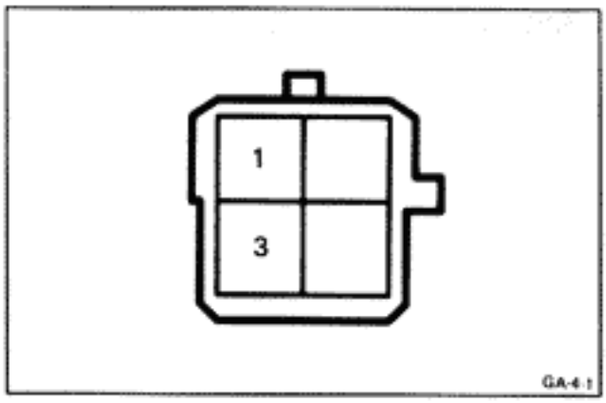

9. INSPECT OD SWITCH

Inspect that there is continuity between 1 and 3.

Terminal / S/W position	1	3
ON		
OFF	○	○

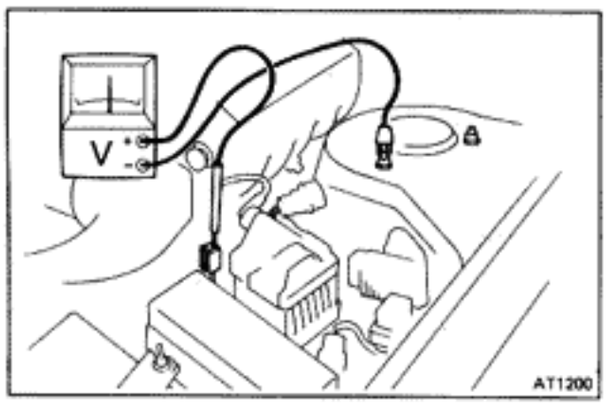

10. INSPECT LOCK-UP MECHANISM

(a) Warm up the coolant and ATF.

(b) Connect a voltmeter to the DG terminal and body ground.

(c) Select the normal pattern.

(d) Drive at around 50 km/h (31 mph) to where 7,5 or 3V appears on the voltmeter (this is the lock-up range).

(e) Depress the accelerator pedal and read the tachometer. If there is a big jump in engine rpm there is no lock-up.

INSPECTION OF MANUAL SHIFTING

NOTE: With this inspection, it can be determined whether the trouble lies within the electrical circuit or a mechanical trouble in the transmission.

1. DISCONNECT ECT ECU CONNECTOR

(a) Remove the glove box.

(b) Disconnect the ECT ECU connector.

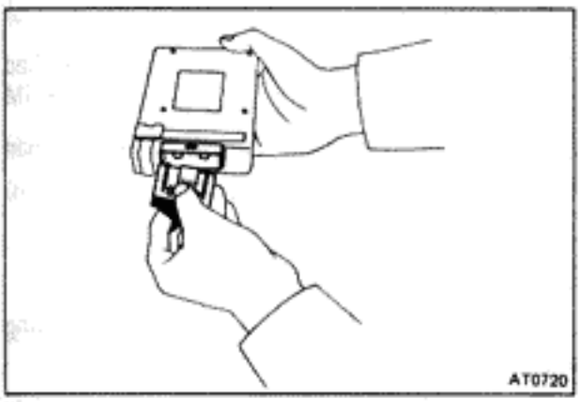

2. INSPECT MANUAL DRIVING OPERATION

(a) While driving, check that there is respective gear change in each drive range.

Shift position	D range	2 range	L range	R range	P range
Gear position	OD	3rd	1st	Reverse	Pawl Lock

(b) Vehicle moves in reverse in "R" range.

(c) Vehicle does not move in "N" range.

(d) Parking pawl locks in "P" range.

If not as specified, check the transmission.

NOTE: If a problem is indicated with the ECT even if this check is as specified, the trouble lies within the electrical circuit.

STALL TEST

The object of this test is to check the overall performance of the transmission and engine by measuring the maximum engine speeds at the "D" and "R" ranges.

CAUTION:

(a) Perform the test at normal operation fluid temperature (50 — 80°C or 122 — 176°F).

(b) Do not continuously run this test longer than 5 seconds.

MEASURE STALL SPEED

(a) Chock the four wheels.

(b) Mount an engine tachometer.

(c) Fully apply the parking brake.

(d) Step down strongly on the brake pedal with your left foot.

(e) Start the engine.

(f) Shift into "D" range. Step all the way down on the accelerator pedal with your right foot. Quickly read the highest engine rpm at this time.

Stall speed: 2,100 ± 150 rpm

(g) Perform the same test in "R" range.

EVALUATION

(a) If the engine speed is the same for both ranges but lower than specified value:

- Engine output is insufficient.
- Stator one-way clutch is not operating properly.

NOTE: If more than 600 rpm below the specified value, the torque converter could be at fault:

(b) If the stall speed in "D" range is higher than specified:

- Line pressure too low
- Front clutch slipping
- One-way clutch No. 2 not operating properly
- OD one-way clutch not operating properly

(c) If the stall speed in "R" range is higher than specified:

- Line pressure too low
- Rear clutch slipping
- Brake No. 3 slipping
- OD one-way clutch not operating properly

(d) If the stall speed in "R" and "D" range is higher than specified:

- Line pressure too low
- Improper fluid level
- OD one-way clutch not operating properly

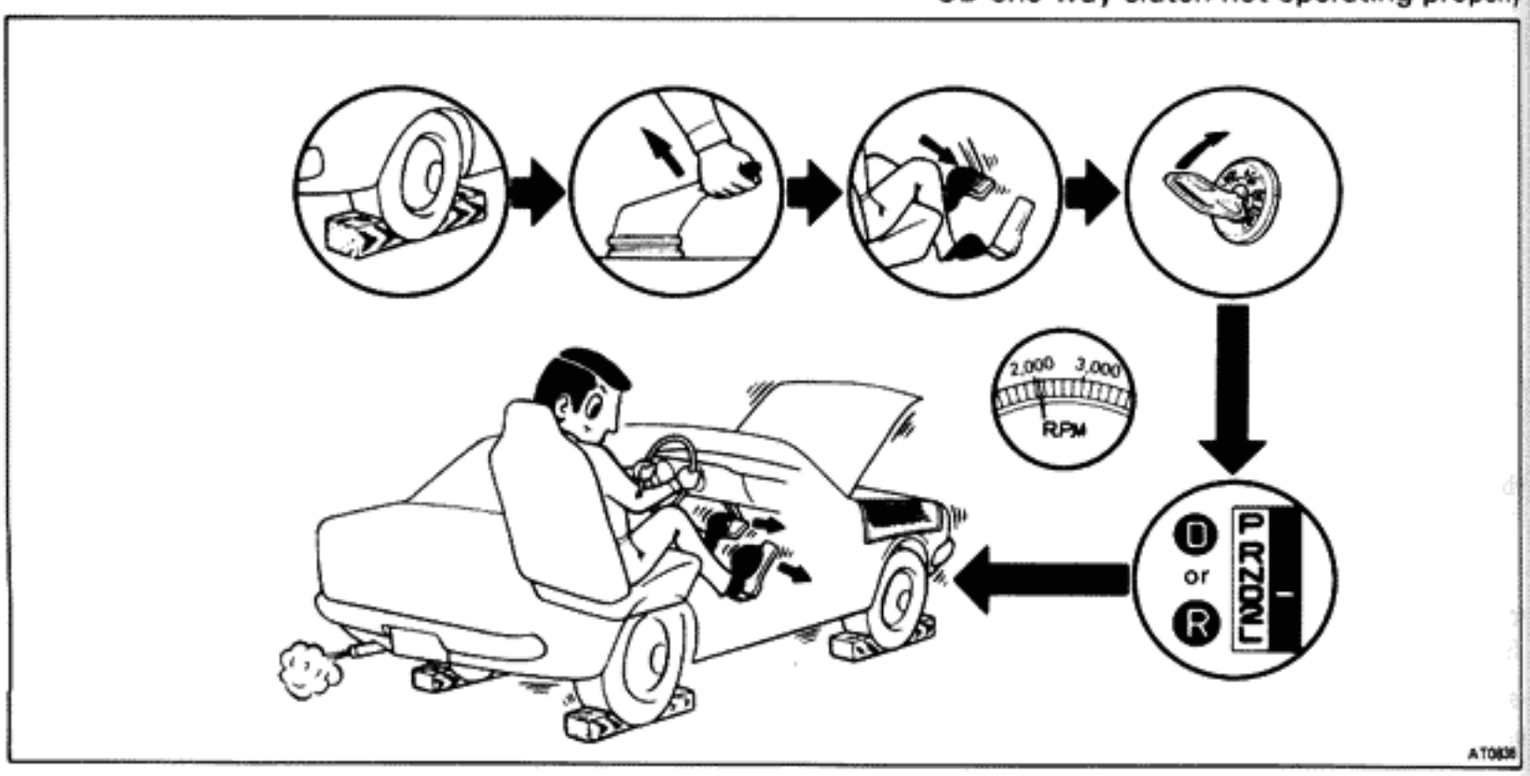

TIME LAG TEST

If the shift lever is shifted while the engine is idling, there will be a certain time elapse or lag before the shock can be felt. This is used for checking the condition of the OD clutch, front clutch, rear clutch and brake No. 3.

CAUTION:

(a) **Perform the test at normal operation fluid temperature (50 — 80°C or 122 — 176°F).**

(b) **Be sure to allow a one minute interval between tests.**

(c) **Make three measurements and take the average value.**

MEASURE TIME LAG

(a) Fully apply the parking brake.

(b) Start the engine.

Check idling speed (A/C OFF)

"N" range 650 rpm

(c) Shift the shift lever from "N" to "D" range. Using a stop watch, measure the time it takes from shifting the lever until the shock is felt.

Time lag: **Less than 1.2 seconds**

(d) In same manner, measure the time lag for "N" → "R".

Time lag: **Less than 1.5 seconds**

EVALUATION

(a) If "N" → "D" time lag is longer than specified:
- Line pressure too low
- Front clutch worn
- OD one-way clutch not operating properly

(b) If "N" → "R" time lag is longer than specified:
- Line pressure too low
- Rear clutch worn
- Brake No.3 worn
- OD one-way clutch not operating properly

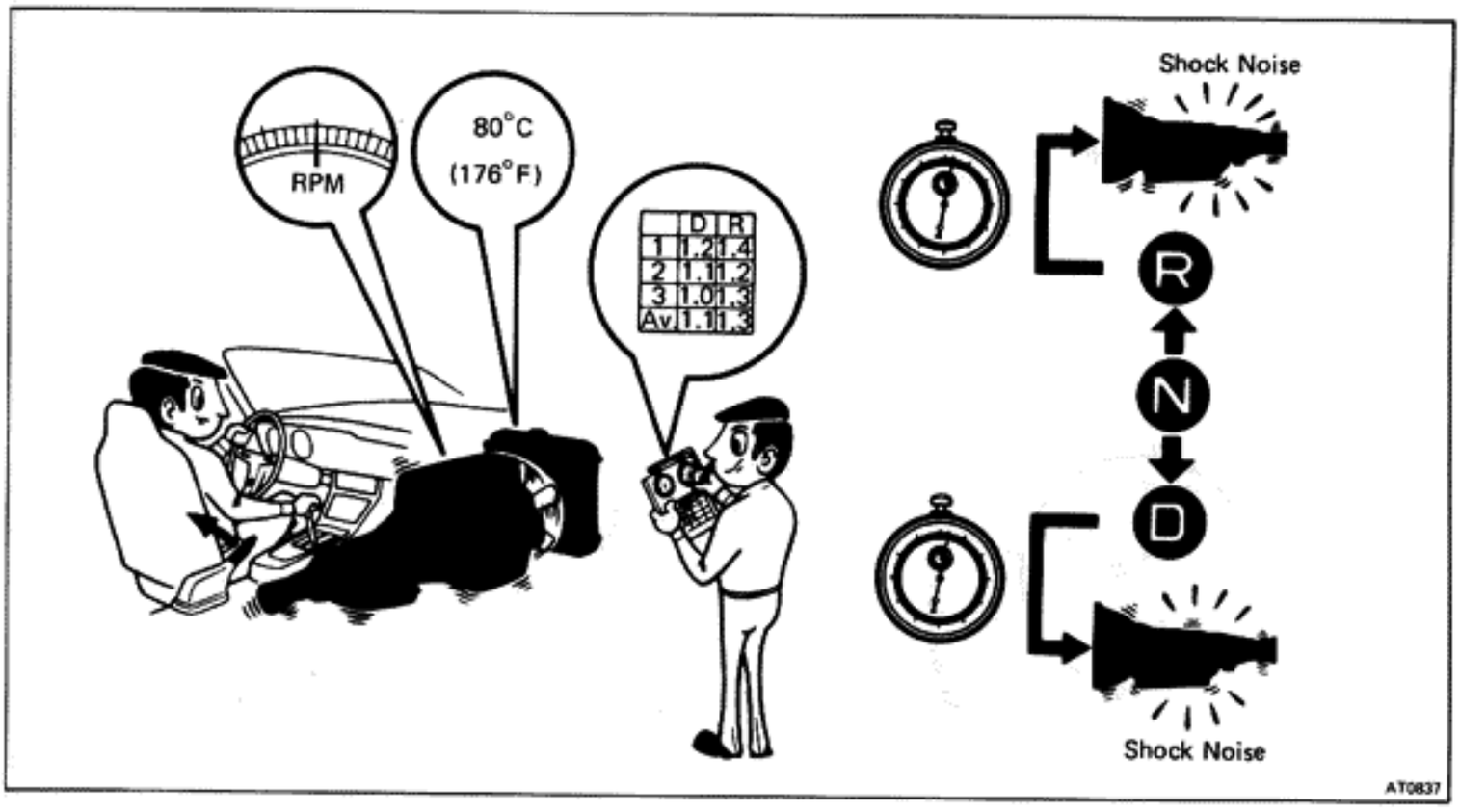

HYDRAULIC TEST

1. PREPARATION

(a) Warm up the transmission fluid.

(b) Remove the transmission case test plug and mount the hydraulic pressure gauge.

SST 09992-00093 Oil pressure gauge

CAUTION: Perform the test at normal operating fluid temperature (50 — 80°C or 122 — 176°F).

2. MEASURE LINE PRESSURE

(a) Fully apply the parking brake and chock four wheels.

(b) Start the engine and check idling rpm.

(c) Shift into "D" range, step down strongly on the brake pedal with your left foot and, while manipulating the accelerator pedal with the right foot, measure the line pressures at the engine speeds specified in table.

(d) In the same manner, perform the test in "R" range.

Engine speed rpm	Line pressure kg/cm² (psi, kPa)	
	"D" range	"R" range
Idling	3.7 — 4.1 (53 — 58) (363 — 402)	5.1 — 5.7 (73 — 81) (500 — 559)
Stall	10.6 — 13.0 (151 — 185) (1,040 — 1,275)	14.3 — 19.0 (203 — 270) (1,402 — 1,863)

(e) If the measured pressures are not up to specified values, recheck the throttle cable adjustment and perform a retest.

EVALUATION

(a) If the measured values at all ranges are higher than specified:
- Throttle cable out-of-adjustment
- Throttle valve defective
- Regulator valve defective

(b) If the measured values at all ranges are lower than specified:
- Throttle cable out-of-adjustment
- Throttle valve defective
- Regulator valve defective
- Oil pump defective
- OD clutch defective

(c) If pressure is low in "D" range only:
- "D" range circuit fluid leakage
- Front clutch defective

(d) If pressure is low in "R" range only:
- "R" range circuit fluid leakage
- Rear clutch defective
- Brake No.3 defective

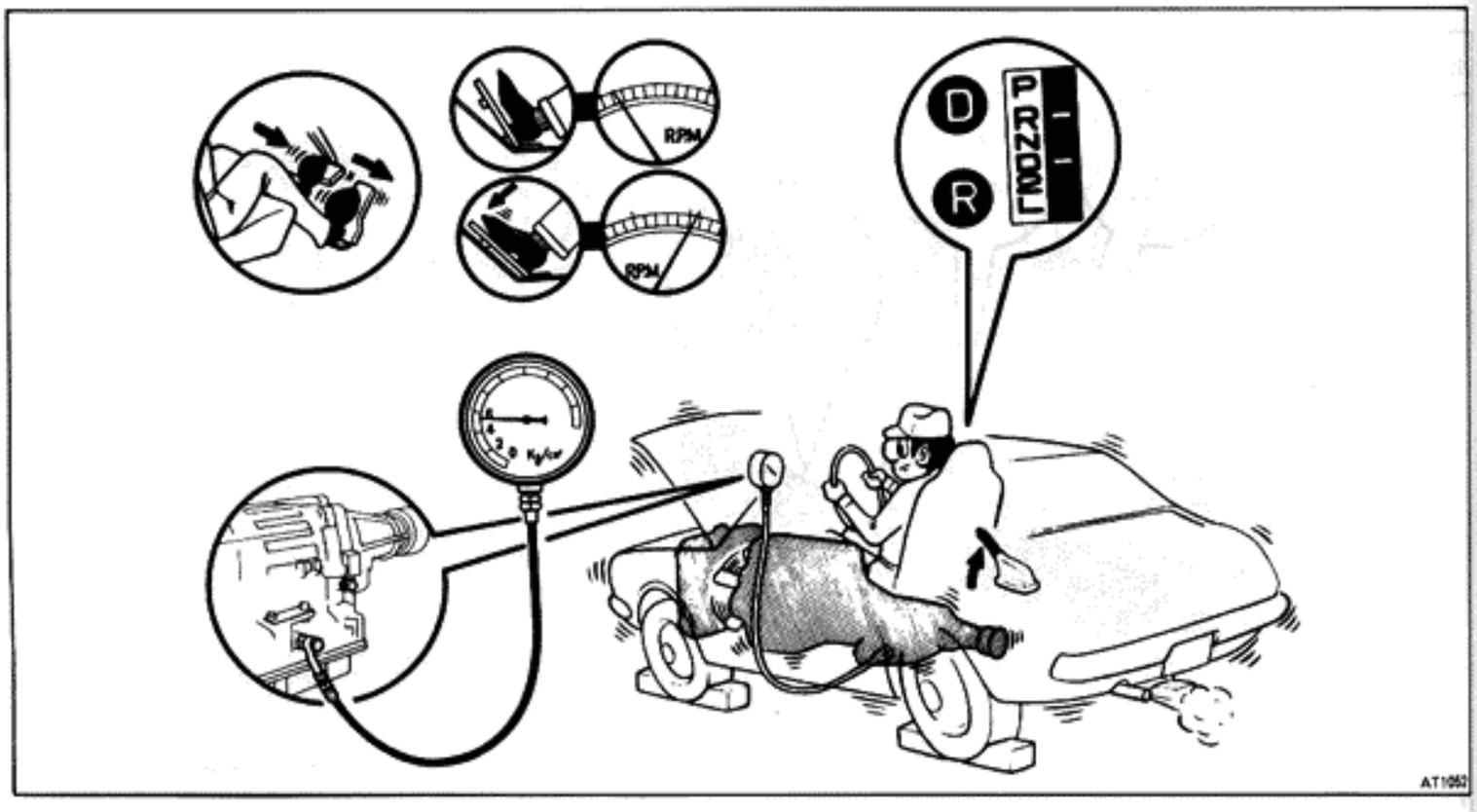

ROAD TEST

CAUTION: Perform the test at normal operating fluid temperature (50 — 80°C or 122 — 176°F).

1. "D" RANGE TEST IN NORM, AND PWR PATTERN RANGES

Shift into "D" range and hold the accelerator pedal constant at 50 % and 100 % throttle valve opening positions.

Push in one of the pattern selector buttons and check the following:

(a) 1-2, 2-3, 3-OD and lock-up up-shifts should take place, and shift points should conform to those shown in the automatic shift diagram.

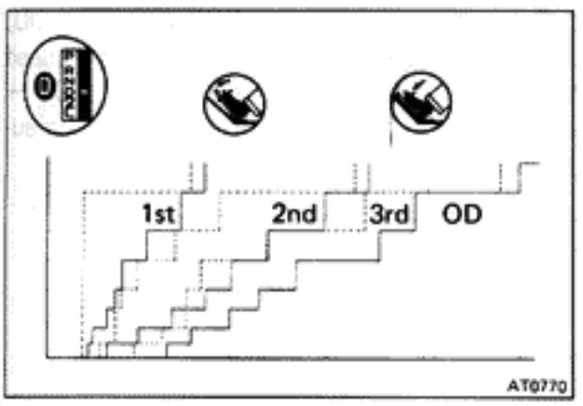

NOTE:

(1) There is no 3rd up-shift or lock-up when coolant temperature is below 35°C (95°F) and speed is under 48 km/h (30 mph).

(2) There is no OD up-shift or lock-up when coolant is below 63°C (145°F) and speed is under 63 km/h (39 mph), or if there is a 10 km/h (6 mph) difference between the set cruise control speed.

EVALUATION

(1) If there is no 1 → 2 up-shift:
- No.2 solenoid is stuck
- 1-2 shift valve is stuck

(2) If there is no 2 → 3 up-shift:
- No.1 solenoid is stuck
- 2-3 shift valve is stuck

(3) If there is no 3 → OD up-shift (throttle valve opening 1/2),
- 3-OD shift valve is stuck

(4) If the shift point is defective:
- Throttle valve, 1-2 shift valve, 2-3 shift valve, 3-OD shift valve etc., are defective.

(5) If the lock-up is defective:
- No.3 solenoid is stuck
- Lock-up relay valve is stuck

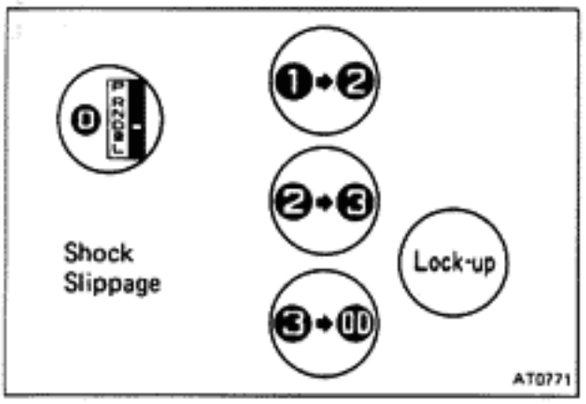

(b) In the same manner, check the shock and the slip at 1 → 2, 2 → 3 and 3 → OD up-shifts.

EVALUATION

If the shock is excessive:
- Line pressure is too high
- Accumulator is defective
- Check ball is defective

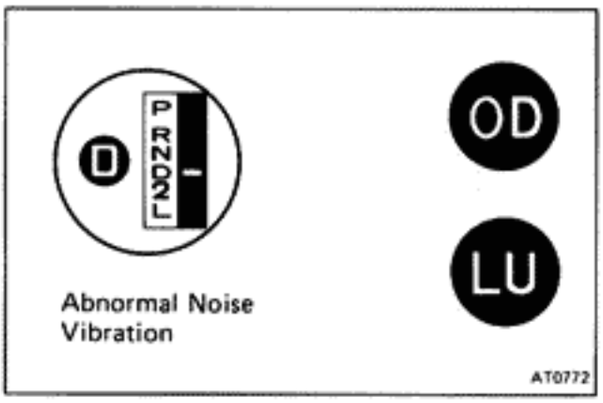

(c) Run in the OD gear of the "D" range and with the lock-up in operation, and check for abnormal noise or vibration.

NOTE: Check for cause of abnormal noise and vibration must be made with extreme care as they could also be due to unbalance in the propeller shaft, differential, tire, torque converter, etc. or insufficient bending rigidity, etc., in the power train.

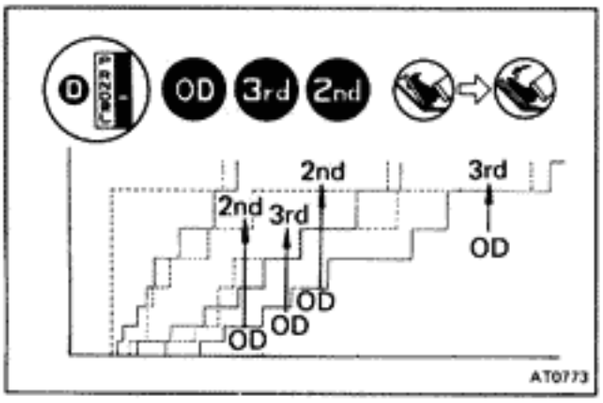

(d) While running in "D" range 2nd, 3rd gears and OD, check to see that the possible kick-down vehicle speed limits for 2 → 1, 3 → 1, 3 → 2, OD → 3 and OD → 2 kick-downs conform to those indicated on the automatic shift diagram.

(e) Check for abnormal shock and slip at kick-down.

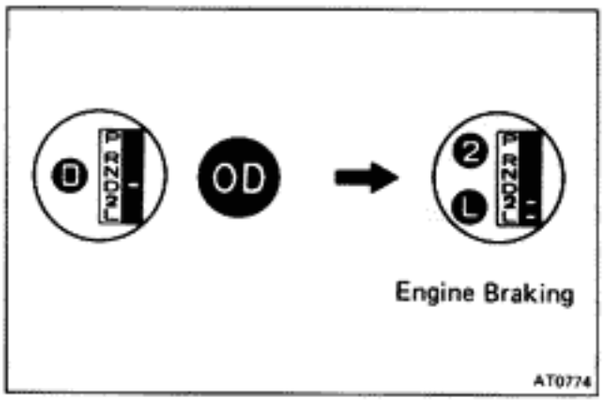

(f) While running in "D" range OD gear, shift to "2" and "L" ranges and check the engine braking effect at each of these ranges.

EVALUATION

(1) If there is no engine braking effect at "2" range:
- Brake No. 1 is defective

(2) If there is no engine braking effect at "L" range:
- Brake No. 3 is defective

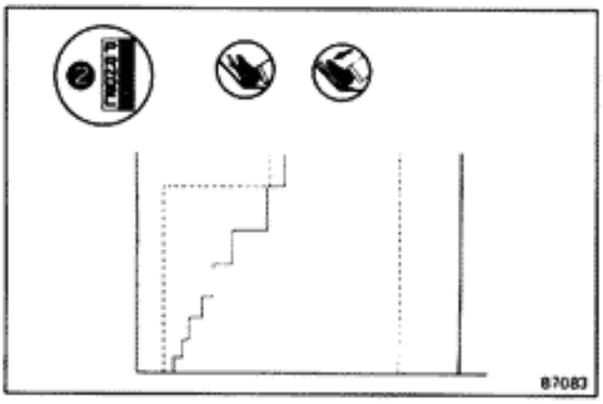

2. "2" RANGE TEST, WITH NORM AND PWR PATTERNS

Shift into "2" range and while driving with the accelerator pedal held constant at specified point (throttle valve opening 50 % and 100 %) and push in one of the pattern selectors, check on the following points.

(a) At each of the above throttle openings, check to see that 1 → 2 up-shift take place and also that the shift points conform to those shown on the automatic shift diagram.

NOTE: There is no OD and no lock-up in "2" range.

(b) While running in "2" range, 2nd gear, release the accelerator pedal and check the engine braking effect.

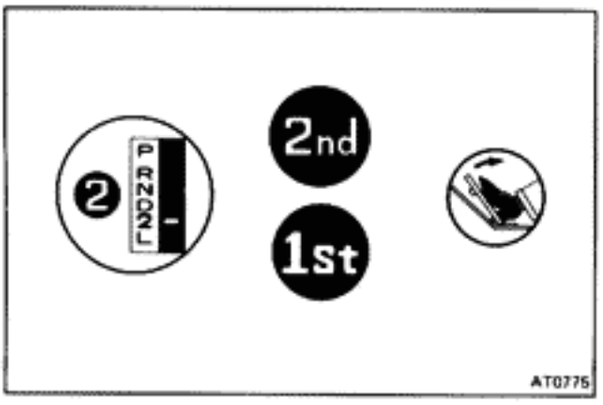

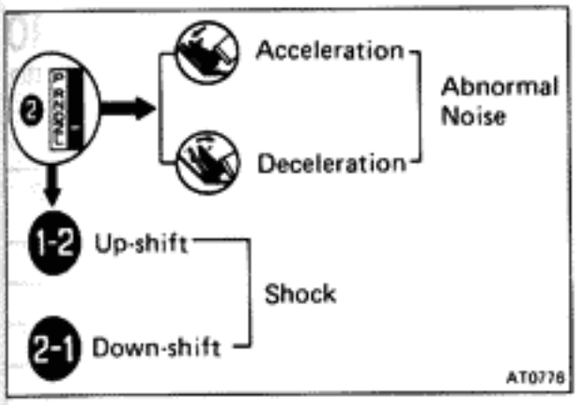

(c) Check for 2 → 1 down-shift and abnormal noise at acceleration and deceleration, and for shock at up-shift and down-shift.

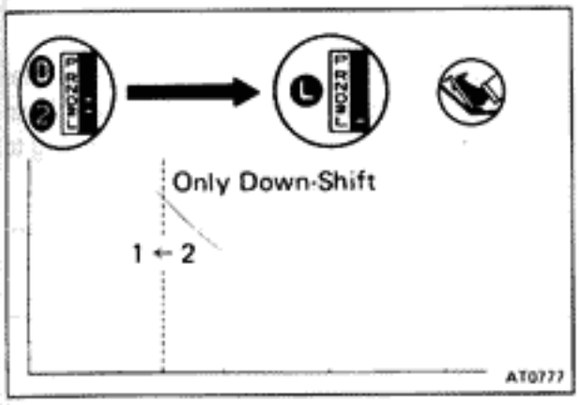

3. "L" RANGE TEST

(a) While running above 80 km/h (50 mph) in the "D" range, release your foot from the accelerator pedal and shift into "L" range.

Then check to see that the 2 → 1 down shift point conforms to 53 km/h (33 mph).

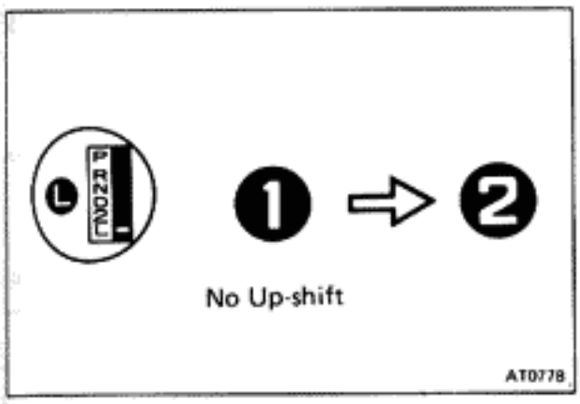

(b) While running in the "L" range, check to see that there is no up-shift to 2nd gear.

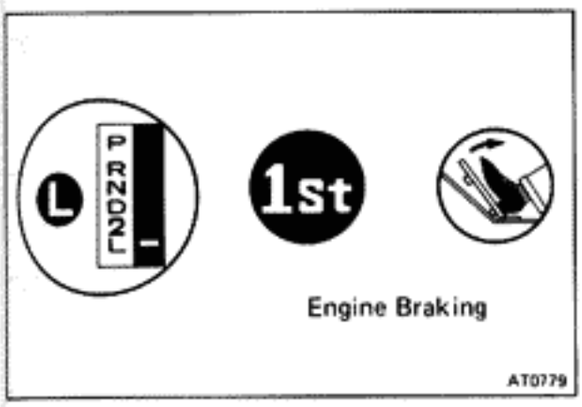

(c) While running in "L" range, release the accelerator pedal and check the engine braking effect.

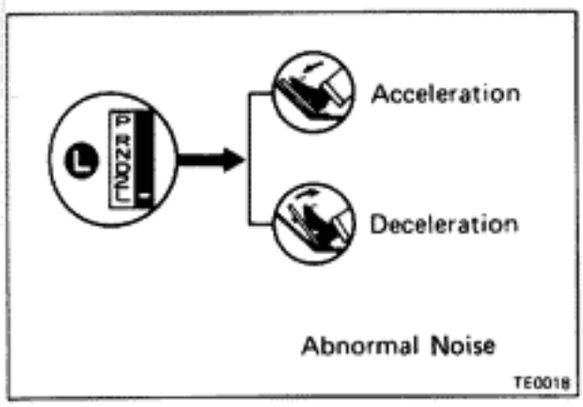

(d) Check for abnormal noise at acceleration and deceleration.

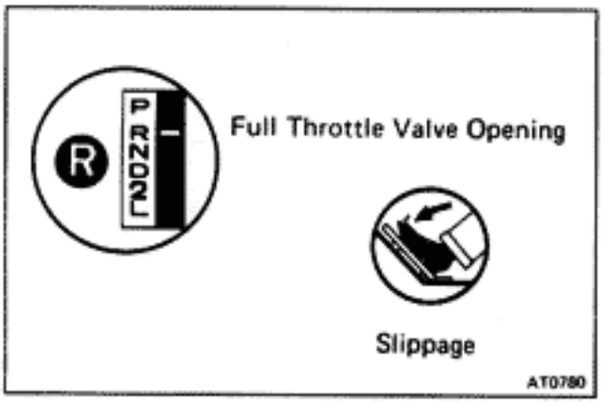

4. "R" RANGE TEST

Shift into "R" range and, while starting at full throttle, check for slipping.

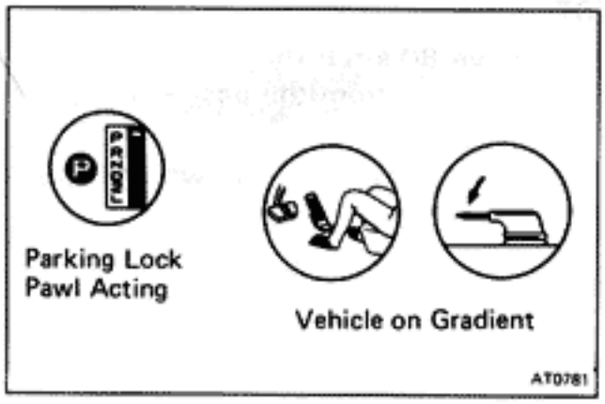

5. "P" RANGE TEST

Stop the vehicle on a gradient (more than 9 %) and after shifting into "P" range, release the parking brake. Then check to see that the parking lock pawl is functioning to prevent the vehicle from moving.

OPERATING MECHANISM FOR EACH GEAR

1. TRANSMISSION SYSTEM

○ .... Operating

Shift lever position	Gear position	C_0	C_1	C_2		B_0	B_1	B_2	B_3		F_0	F_1	F_2
				I .P	O.P				I.P	O.P			
P	Parking	○											
R	Reverse	○		○	○				○	○			
N	Neutral	○											
D	1st	○	○								○		○
	2nd	○	○					○			○	○	
	3rd	○	○		○			○			○		
	OD		○		○	○		○					
2	1st	○	○								○		
	2nd	○	○				○	○			○	○	
	3rd	○	○		○			○			○		
L	1st	○	○						○	○	○		○
	*2nd	○	○				○	○			○	○	

* Down shift only in "L" range, 2nd gear — no up shift.

2. SOLENOID SYSTEM

Possible gear positions in accordance with solenoid operating conditions.

Range	NORMAL			SOLENOID NO. 1 MALFUNCTIONING			SOLENOID NO. 2 MALFUNCTIONING			BOTH SOLENOIDS MALFUNCTIONING		
	Solenoid valve		Gear	Solenoid valve		Gear	Solenoid valve		Gear	Solenoid valve		Gear
	No.1	No.2	Position	No.1	No.2	Position	No.1	No.2	Position	No.1	No.2	Position
"D" range	ON	OFF	1st	X	ON (OFF)	3rd (OD)	ON	X	1st	X	X	OD
	ON	ON	2nd	X	ON	3rd	OFF (ON)	X	OD (1st)	X	X	OD
	OFF	ON	3rd	X	ON	3rd	OFF	X	OD	X	X	OD
	OFF	OFF	OD	X	OFF	OD	OFF	X	OD	X	X	OD
"2" range	ON	OFF	1st	X	ON (OFF)	3rd (OD)	ON	X	1st	X	X	3rd
	ON	ON	2nd	X	ON	3rd	OFF (ON)	X	3rd (1st)	X	X	3rd
	OFF	ON	3rd	X	ON	3rd	OFF	X	3rd	X	X	3rd
"L" range	ON	OFF	1st	X	OFF	1st	ON	X	1st	X	X	1st
	ON	ON	2nd	X	ON	2nd	ON	X	1st	X	X	1st

( ): No fail safe function X: Malfunctions

AUTOMATIC SHIFT DIAGRAM

		Throttle valve fully open [ ] Fully closed km/h (mph)							
		1–2	2–3	3–OD	[3–OD]	[OD–3]	OD–3	3–2	2–1
D range	NORM	47–52 (29–32)	92–101 (57–63)	135–144 (84–89)	[36–40 (22–25)]	[26–30 (16–19)]	130–138 (81–86)	88–96 (55–60)	42–47 (26–29)
	PWR	52–57 (32–35)	105–114 (65–71)	152–161 (94–100)	[42–46 (26–29)]	[28–32 (17–20)]	146–155 (91–96)	101–109 (63–68)	42–47 (26–29)
2 range	NORM PWR	47–52 (29–32)	112–121 (70–75)	—	—	—	—	102–110 (63–68)	42–47 (26–29)
L range	NORM PWR	—	—	—	—	—	—	—	51–55 (32–34)

		Throttle valve opening 5 % km/h (mph)					
		Lock-up ON			Lock-up OFF		
		2nd	3rd (*)	OD	2nd	3rd (*)	OD
D range	NORM PWR	—	53–58 (33–36)	53–58 (33–36)	—	49–54 (30–34)	49–54 (30–34)
2 range	NORM PWR	—	—	—	—	—	—
L range	NORM PWR	—	—	—	—	—	—

(*): OD switch OFF

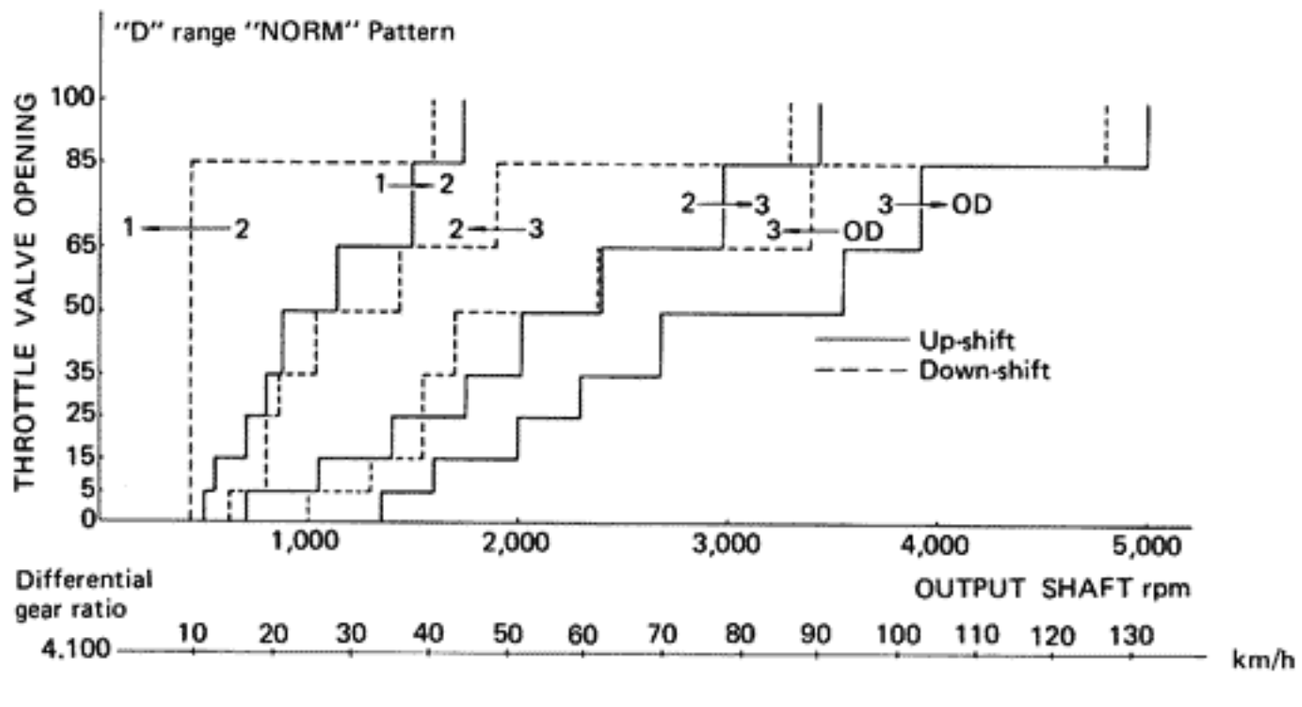

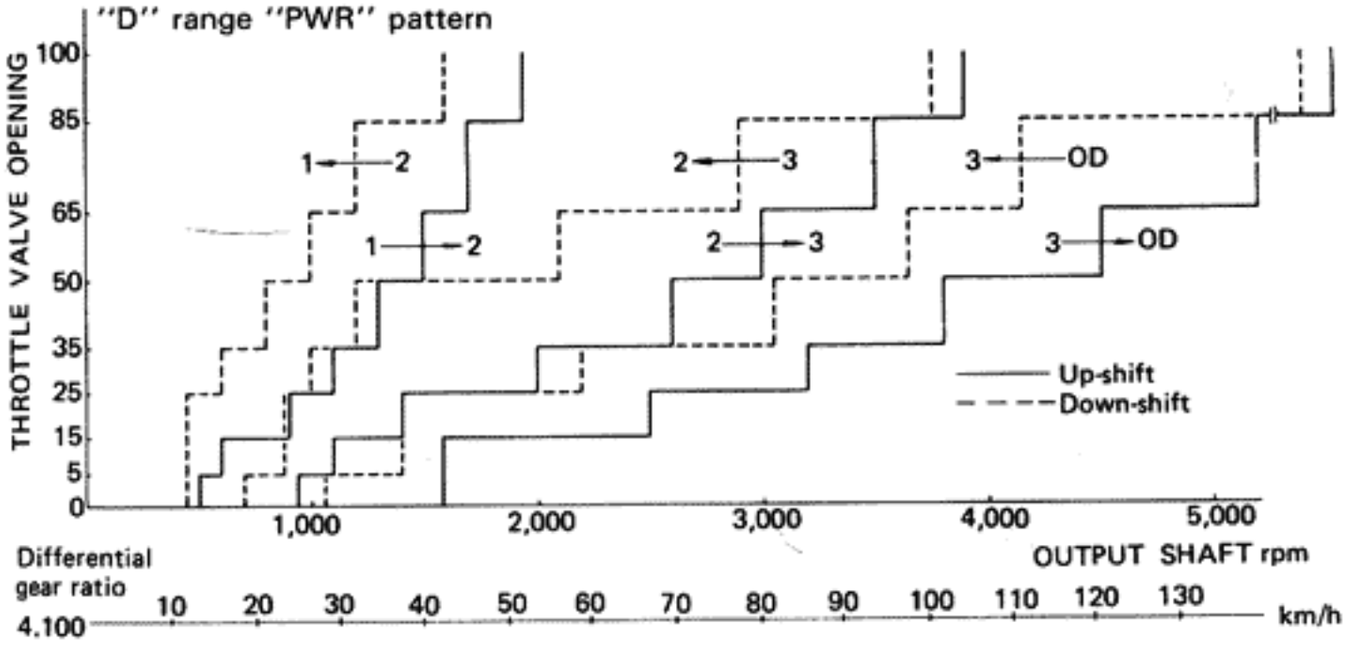
"D" range "PWR" pattern
THROTTLE VALVE OPENING
100
85
65
50
35
25
15
5
0
1 → 2
2 → 3
3 → OD
1 → 2
2 → 3
3 → OD
Up-shift
Down-shift
1,000
2,000
3,000
4,000
5,000
OUTPUT SHAFT rpm
Differential gear ratio
4.100
10 20 30 40 50 60 70 80 90 100 110 120 130
km/h

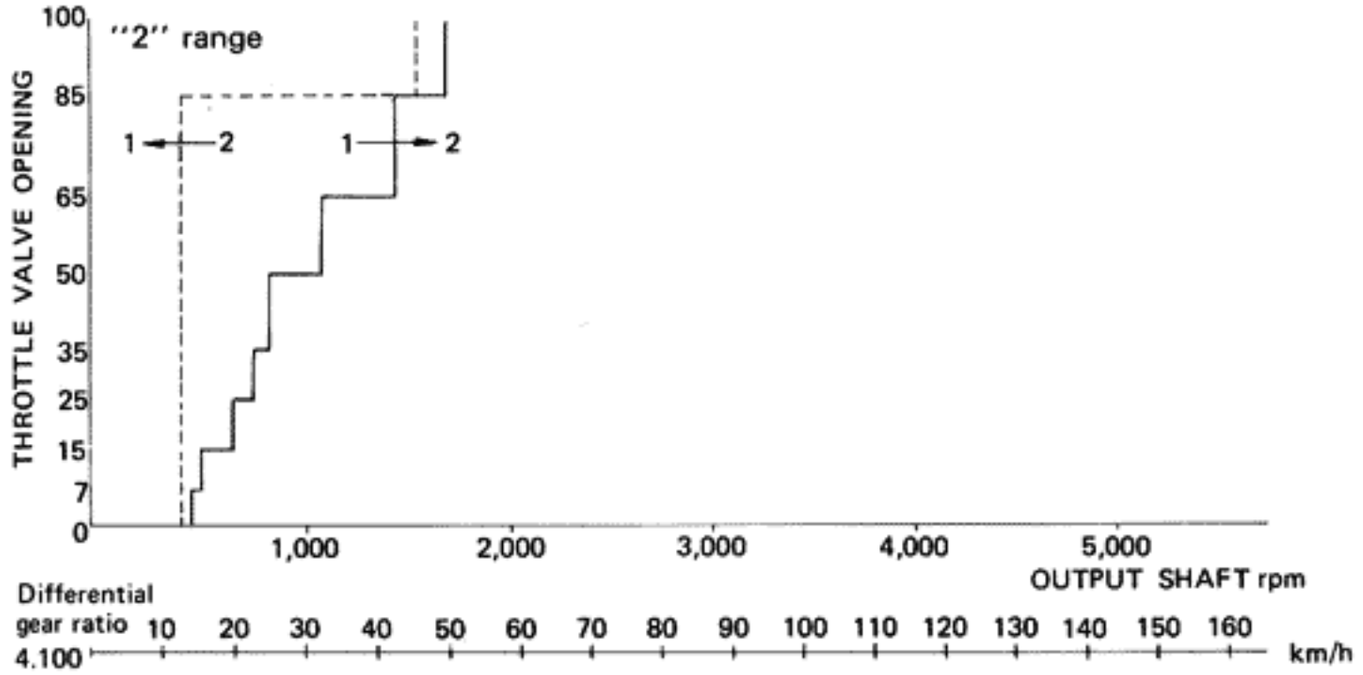
"2" range
THROTTLE VALVE OPENING
100
85
65
50
35
25
15
7
0
1 → 2
1 → 2
1,000
2,000
3,000
4,000
5,000
OUTPUT SHAFT rpm
Differential gear ratio
4.100
10 20 30 40 50 60 70 80 90 100 110 120 130 140 150 160
km/h

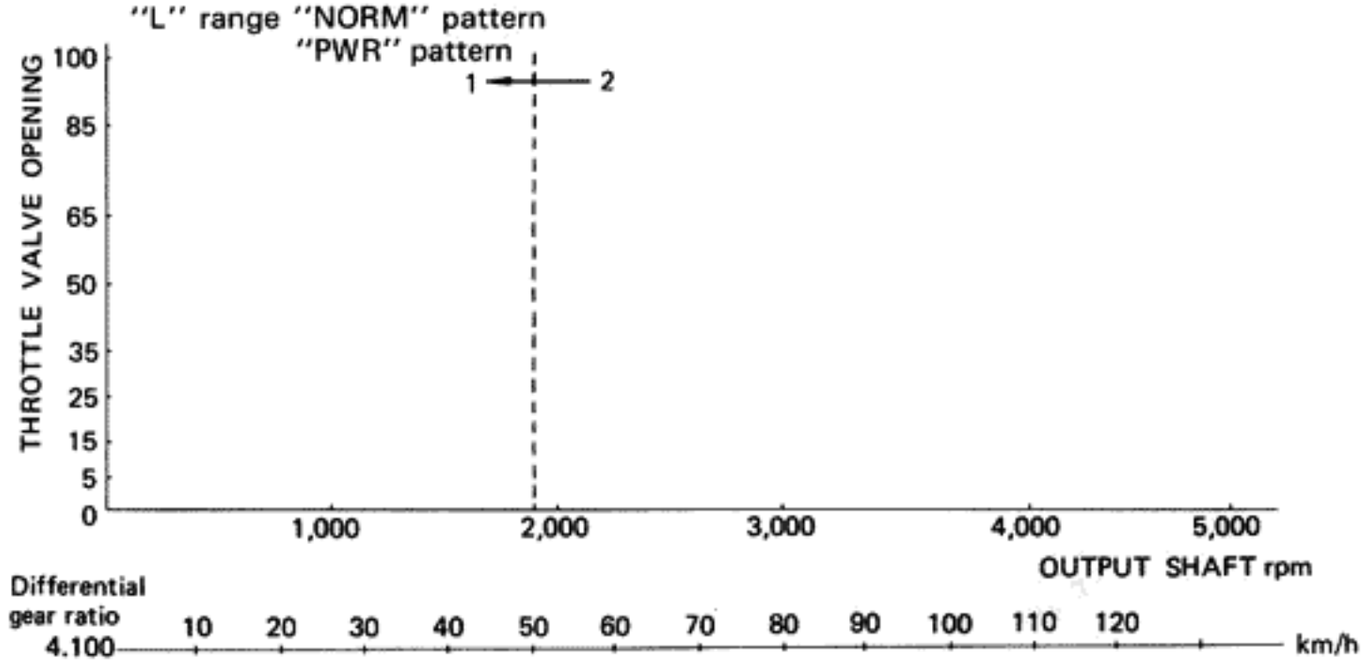
"L" range "NORM" pattern
"PWR" pattern
THROTTLE VALVE OPENING
100
85
65
50
35
25
15
5
0
1 → 2
1,000
2,000
3,000
4,000
5,000
OUTPUT SHAFT rpm
Differential gear ratio
4.100
10 20 30 40 50 60 70 80 90 100 110 120
km/h

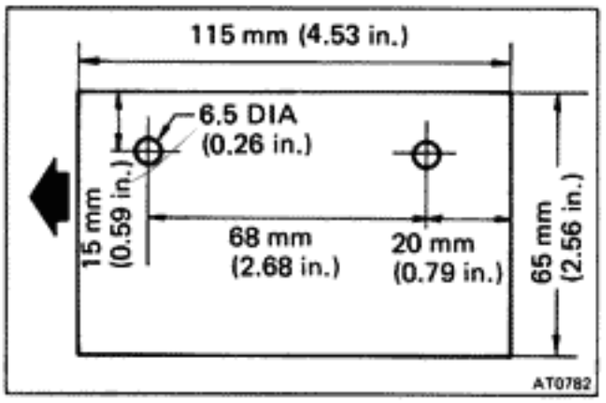

ON-VEHICLE REPAIR

REMOVAL OF SOLENOID OR VALVE BODY

1. MAKE PLATE TO RETAIN ACCUMULATOR PISTONS

A retainer is helpful for holding accumulator pistons in the case during removal and installation of the valve body.

The plate may be made from aluminum or plastic.

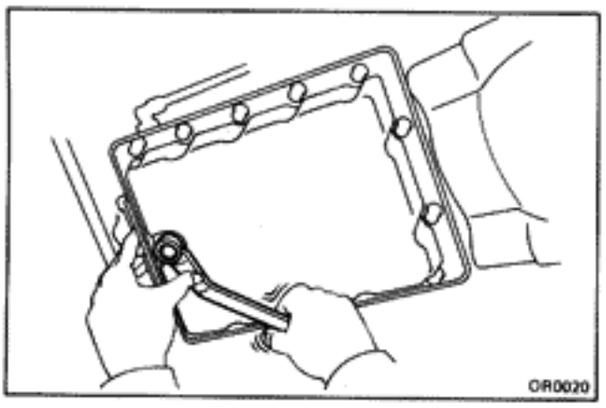

2. CLEAN TRANSMISSION EXTERIOR

To help prevent contamination, clean the exterior of the transmission.

3. DRAIN TRANSMISSION FLUID

Remove the drain plug and drain fluid into a suitable container.

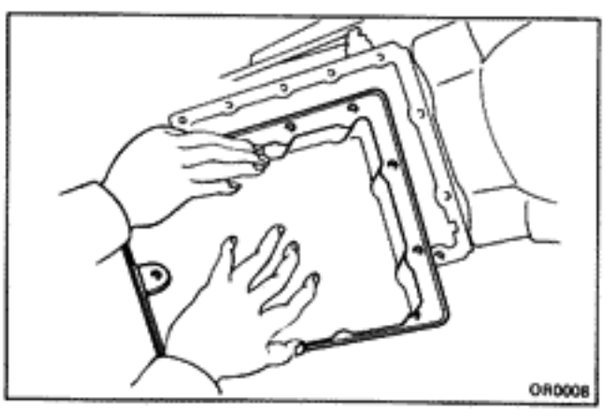

4. REMOVE OIL PAN, FILLER TUBE AND GASKET

CAUTION: Some fluid will remain in the oil pan. Be careful not to damage the filler tube and O-ring.

Remove all pan bolts, and carefully remove the pan assembly. Discard the gasket.

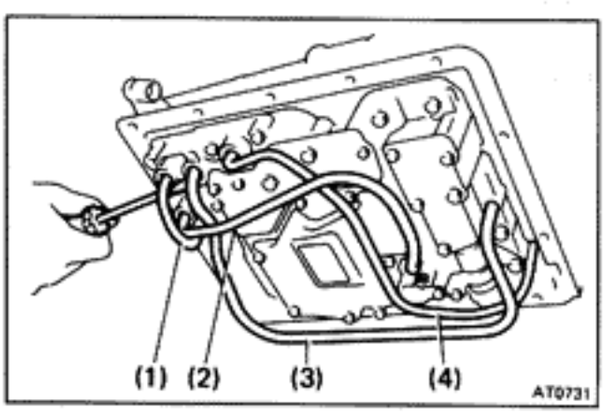

5. REMOVE OIL TUBES

(a) Remove the four tubes in the numerical order shown.

(b) Pry up both tube ends with a large screwdriver and remove the tubes.

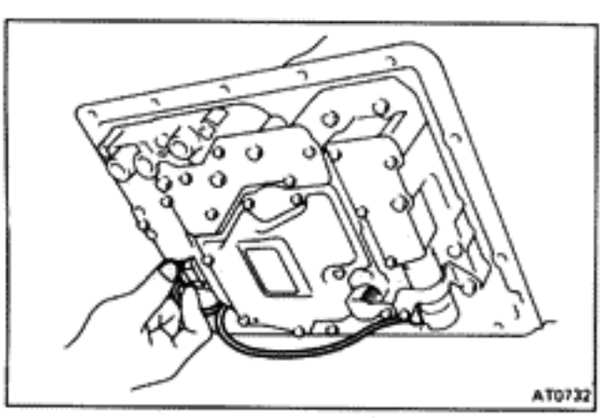

6. DISCONNECT TWO CONNECTORS FROM SOLENOID

(a) Disconnect the solenoid wire from clamp.

(b) Disconnect the two connectors.

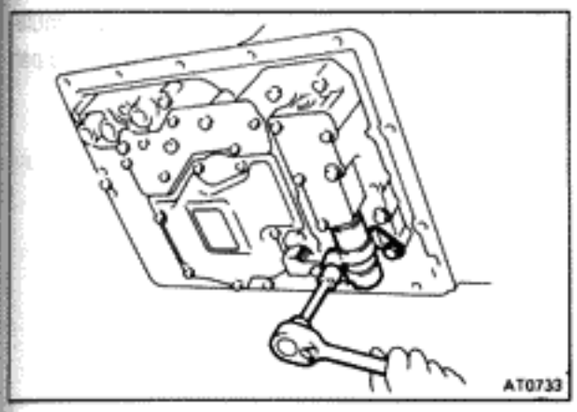

7. WHEN REPLACING SOLENOID

(a) For the No. 3 solenoid,

(1) Remove the two bolts.

(2) Remove the solenoid.

(b) For the No. 1 and 2 solenoids,

(1) Remove the three bolts.

(2) Remove the solenoid with gasket.

NOTE: Be careful not to remove the two valve springs.

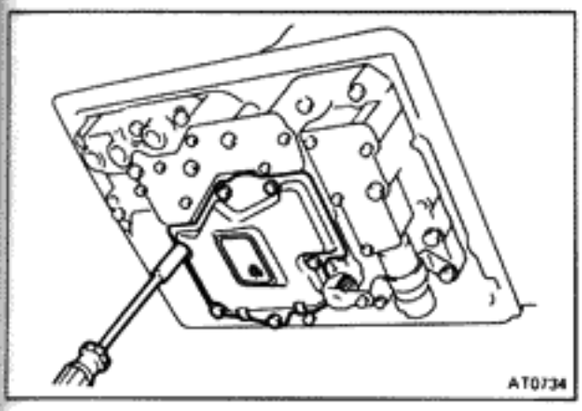

8. REMOVE OIL STRAINER

Remove the six bolts, and the oil strainer.

CAUTION: Be careful as some oil will come out with the oil strainer.

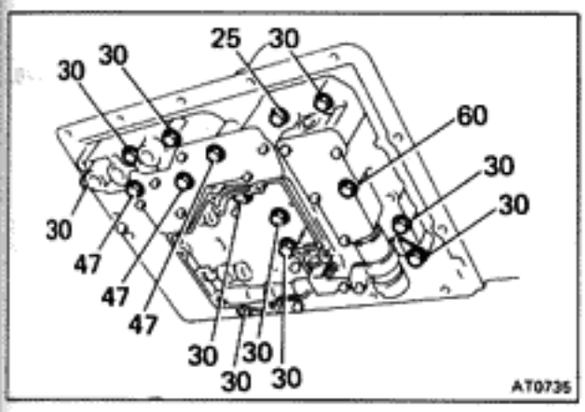

9. REMOVE VALVE BODY

(a) Remove the fifteen bolts.

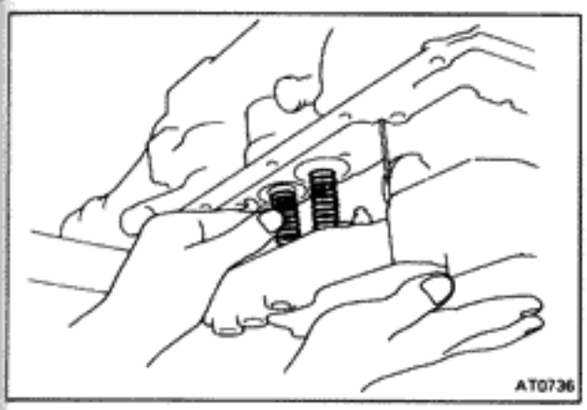

(b) Remove the B_2 and C_2 accumulator piston springs.

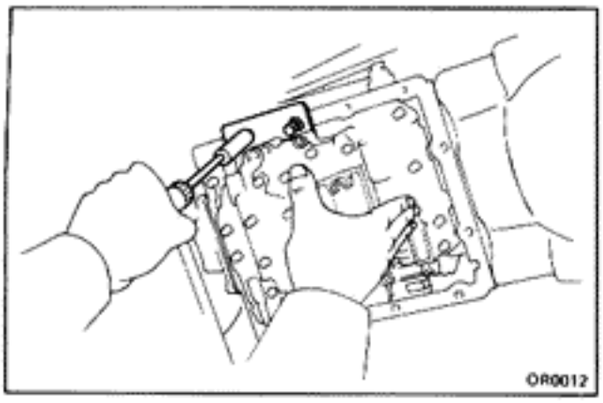

(c) Lower valve body slightly, and install the accumulator piston retaining plate. Hold in place with two pan bolts, finger tight.

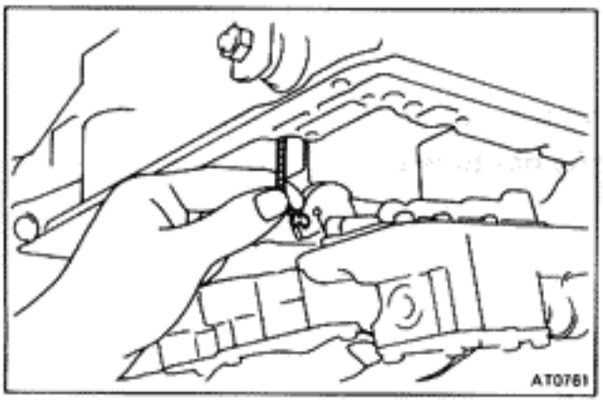

(d) Disconnect the throttle cable from the cam and remove the valve body.

DISASSEMBLY, INSPECTION AND ASSEMBLY OF VALVE BODY

(See page AT-83)

INSTALLATION OF VALVE BODY

1. CONNECT THROTTLE CABLE TO CAM

Push the cable fitting into the cam.

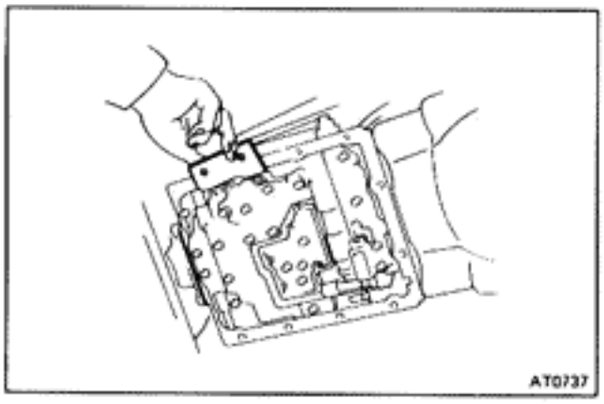

2. REMOVE ACCUMULATOR RETAINING PLATE

Remove the two pan bolts, and slide out the plate.

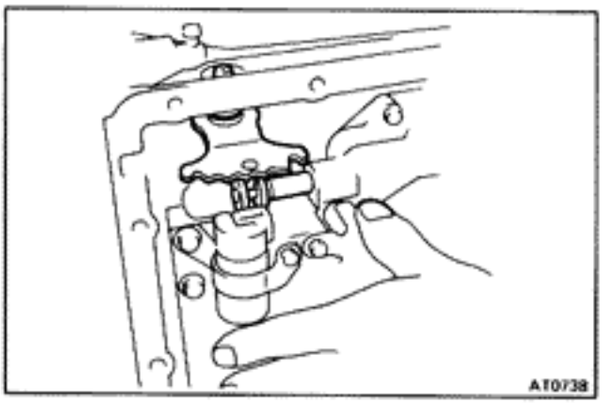

3. INSTALL VALVE BODY

(a) Align the manual valve lever with the manual valve.

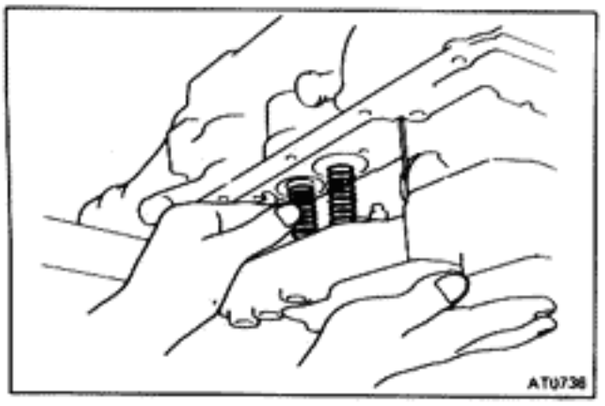

(b) Install the B_2 and C_2 accumulator piston springs.

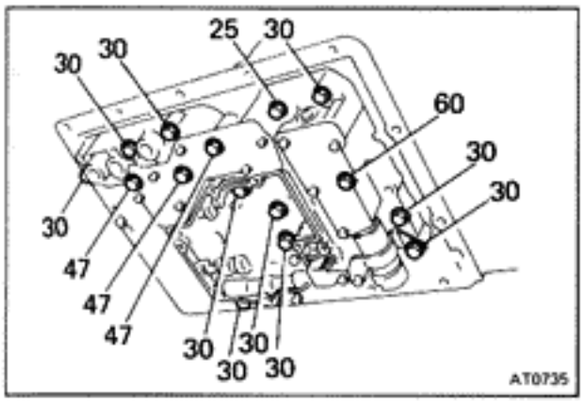

4. INSTALL VALVE BODY BOLTS

Install the bolts as shown. Tighten the bolts evenly.

Torque: 100 kg-cm (7 ft-lb, 10 N·m)

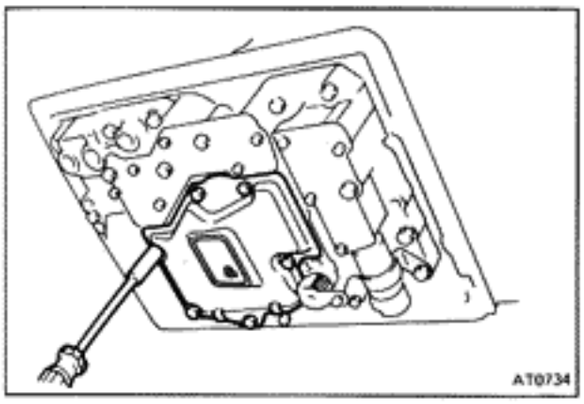

5. INSTALL OIL STRAINER

Be sure the strainer is clean. Torque the six bolts.

Torque: 55 kg-cm (48 in.-lb, 5.4 N·m)

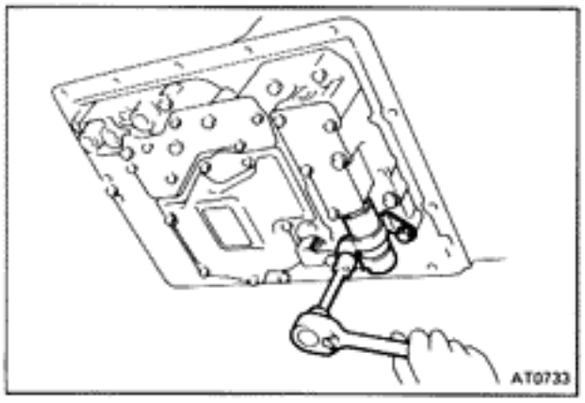

6. WHEN REPLACING SOLENOID

(a) For the No. 3 solenoid,

- Install the solenoid into the bore.
- Tighten the two bolts.

Torque: 55 kg-cm (48 in.-lb, 5.4 N·m)

(b) For the No. 1 and 2 solenoids,

- Make sure that the two valve spring are installed correctly.
- Install the solenoid over the gasket and install the center of the bolt.
- Tighten the three bolts.

Torque: 100 kg-cm (7 ft-lb, 10 N·m)

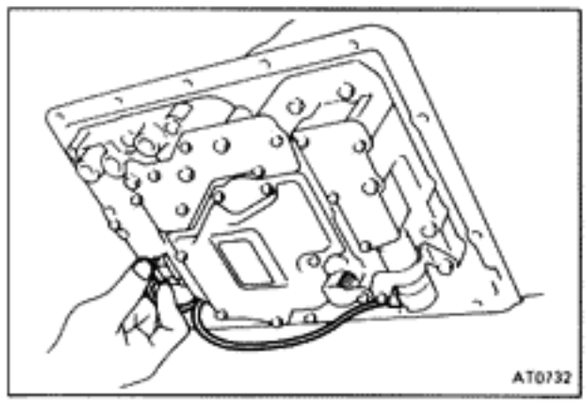

7. CONNECT TWO CONNECTORS TO EACH SOLENOID

(a) Connect the two connectors to each solenoid.

(b) Clamp the solenoid wire.

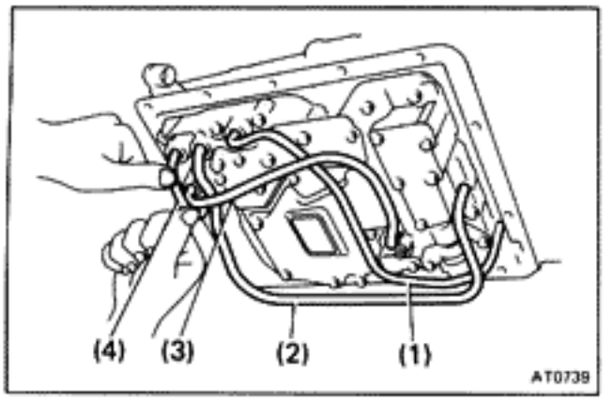

8. INSTALL FOUR OIL TUBES

Press the tubes by hand into the positions indicated in numerical order shown.

CAUTION: Make sure that the oil tubes or the two magnets do not interfere with the oil pan.

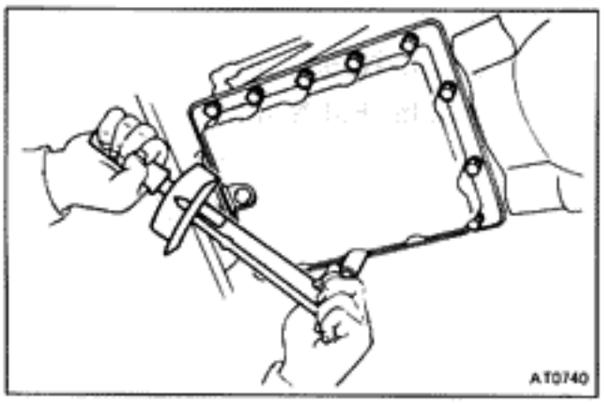

9. INSTALL PAN WITH NEW GASKET

Be sure the pan is clean and the two magnets are in place.

CAUTION: Do not use gasket sealer.

Tighten the bolts evenly.

Torque: 45 kg-cm (39 in.-lb, 4.4 N·m)

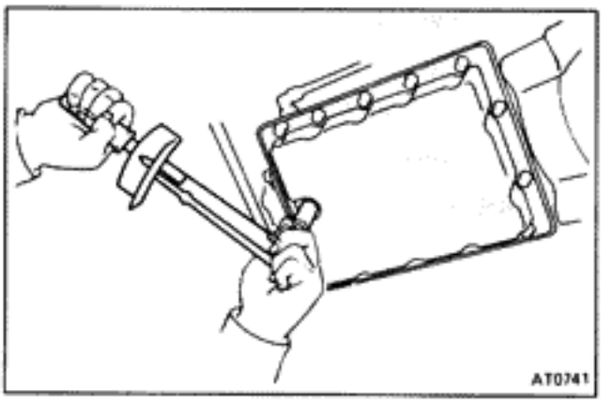

10. INSTALL DRAIN PLUG

Torque the drain plug.

Torque: 205 kg-cm (15 ft-lb, 20 N·m)

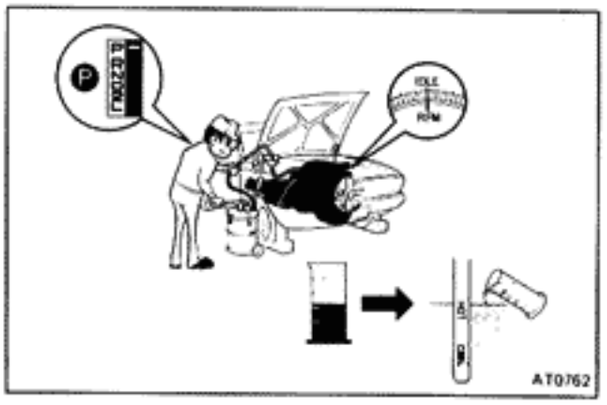

11. FILL TRANSMISSION WITH ATF

Add only about four quarts of ATF.

CAUTION: Do not overfill.

Fluid type: ATF DEXRON® II

12. CHECK FLUID LEVEL
(See page MA-13)

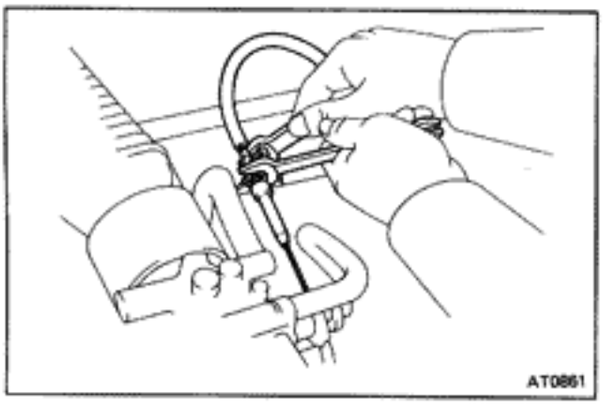

REMOVAL OF THROTTLE CABLE

1. REMOVAL AIR CLEANER

2. DISCONNECT THROTTLE CABLE

(a) Disconnect the cable housing from the bracket on the cylinder head cover.

(b) Disconnect the cable from the throttle linkage.

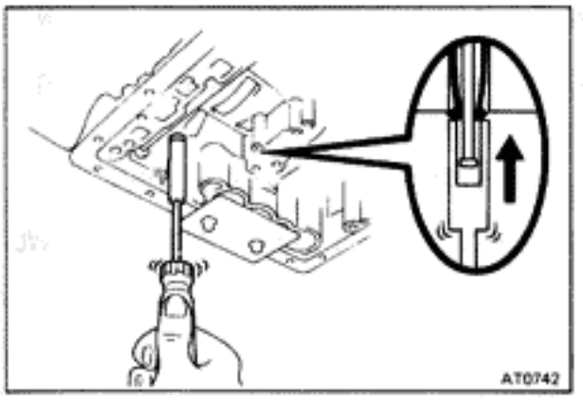

3. **REMOVE VALVE BODY (See page AT-32)**

4. **PUSH THROTTLE CABLE OUT OF TRANSMISSION CASE**
   Using a 10-mm socket, push the throttle cable out.

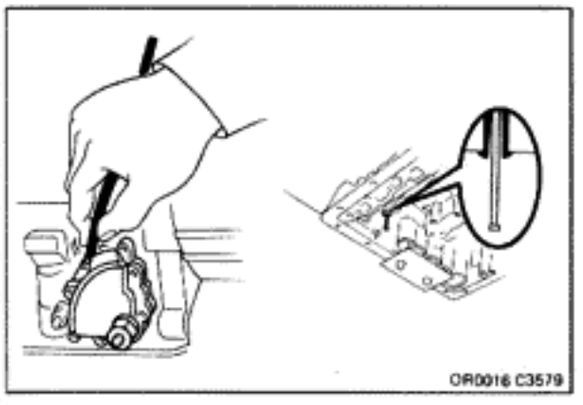

INSTALLATION OF THROTTLE CABLE

1. **INSTALL CABLE IN TRANSMISSION CASE**
   Be sure to push it in all the way.

2. **INSTALL VALVE BODY (See page AT-34)**

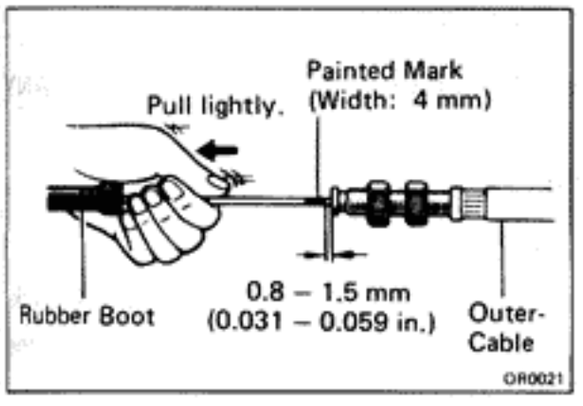

3. **IF THROTTLE CABLE IS NEW, PAINT MARK ON INNER CABLE**
   NOTE: New cables do not have a cable stopper installed.
   Therefore, to make adjustment possible, paint a mark as described below.
   (a) Pull the inner cable lightly until slight resistance is felt, and hold it.
   (b) Paint a mark as shown, about 4 mm (0.16 in.) in width.

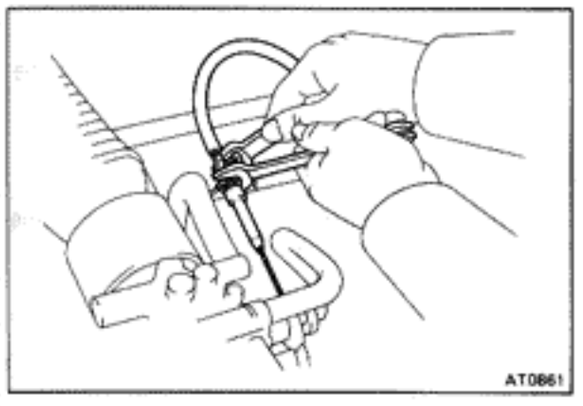

4. **CONNECT THROTTLE CABLE**
   (a) Connect the cable to the throttle linkage.
   (b) Connect the cable housing to the bracket on the valve cover.

5. **ADJUST THROTTLE CABLE (See page AT-5)**

6. **INSTALL AIR CLEANER**

7. **TEST DRIVE VEHICLE**

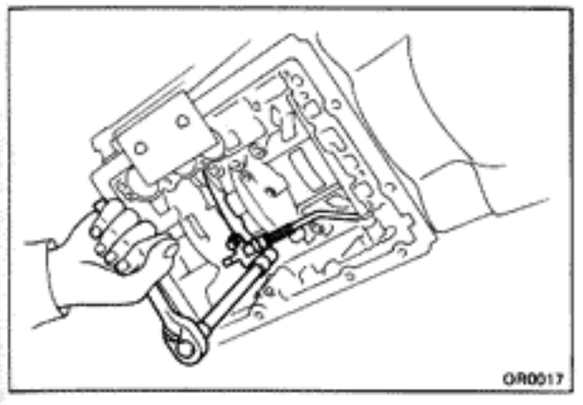

REMOVAL OF PARKING LOCK PAWL

1. **REMOVE VALVE BODY (See page AT-32)**

2. **REMOVE PARKING LOCK PAWL BRACKET**
   Remove the two bolts and the bracket.

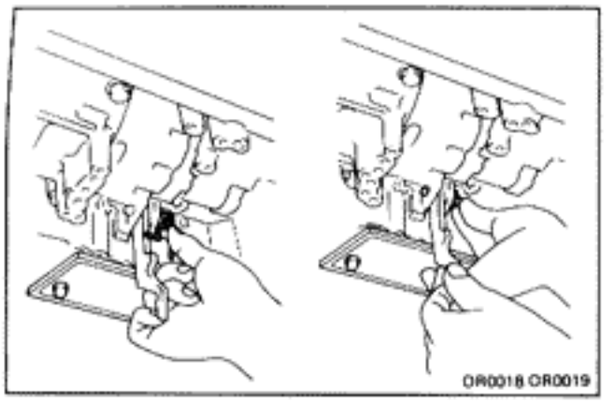
OR0018 OR0019

3. **REMOVE SPRING FROM PARKING PAWL PIVOT PIN**

4. **REMOVE PARKING PAWL PIVOT PIN AND PARKING LOCK PAWL**

INSTALLATION OF PARKING LOCK PAWL

1. **INSTALL PARKING LOCK PAWL AND PARKING PAWL PIVOT PIN**

2. **INSTALL PIVOT SPRING**

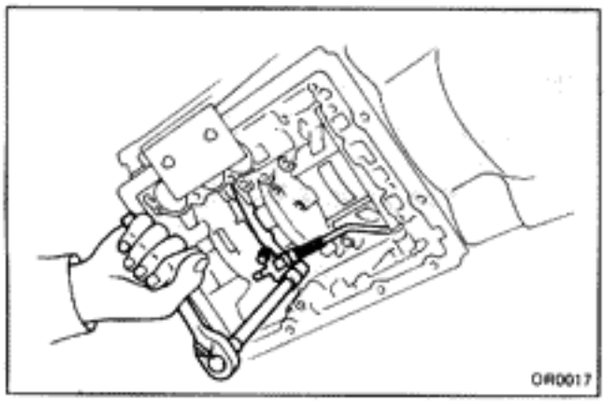
OR0017

3. **INSTALL PARKING LOCK PAWL BRACKET**
   (a) Push lock rod fully forward.
   (b) Install two bolts finger tight.
   (c) Check that the parking lock pawl operates smoothly.
   (d) Torque the bolts.

   Torque: 75 kg-cm (65 in.-lb, 7.4 N·m)

4. **INSTALL VALVE BODY (See page AT-34)**

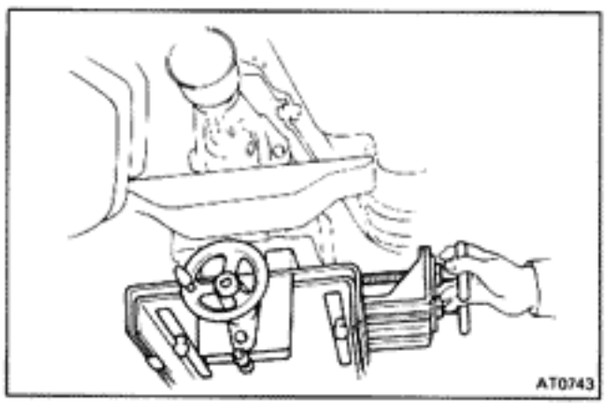
AT0743

REMOVAL OF EXTENSION HOUSING

1. **RAISE VEHICLE AND POSITION PAN TO CATCH ANY FLUID THAT MAY DRIP**

2. **REMOVE PROPELLER SHAFT**

3. **JACK UP TRANSMISSION SLIGHTLY**
   Securely support the transmission on a transmission jack.
   Lift the transmission slightly to remove weight from the rear support member.

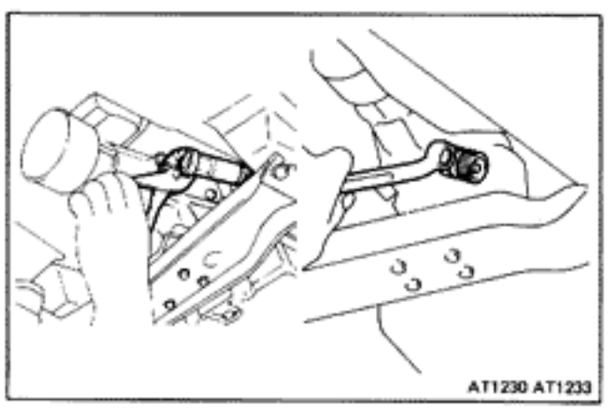
AT1230 AT1233

4. **DISCONNECT SPEEDOMETER CABLE**
   Loosen the serrated collar with pliers. Do not lose the felt dust protector and washer.

5. **REMOVE SPEEDOMETER DRIVEN GEAR**
   Remove one bolt and locking tab. Pry out the speedometer driven gear with a screwdriver.

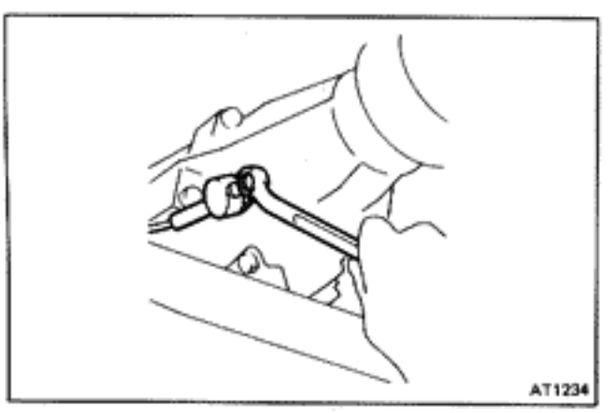
AT1234

6. **REMOVE SPEED SENSOR**

7. REMOVE REAR SUPPORT MEMBER

(a) Remove the ground strap and the rubber exhaust hanger.

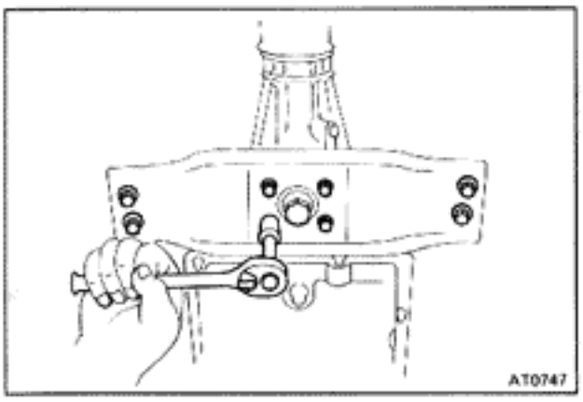

(b) Remove the eight bolts and support.

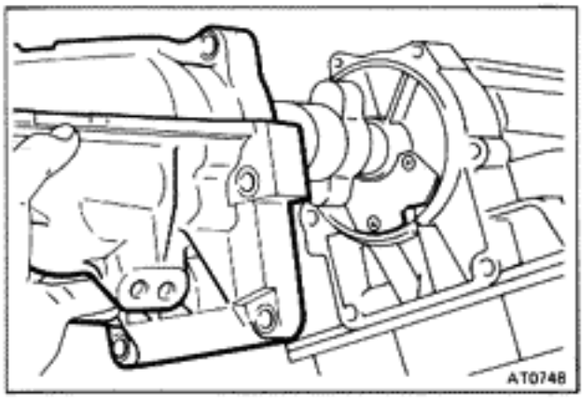

8. REMOVE EXTENSION HOUSING AND GASKET

Remove the six bolts. If necessary, tap the extension housing with a soft-faced hammer or block of wood to loosen it.

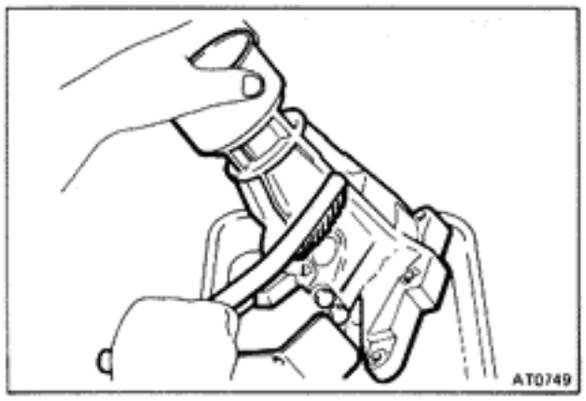

9. CLEAN AND INSPECT COMPONENTS

(a) Wash components in clean solvent, and dry with compressed air.

(b) Check the case, speedometer gear and output shaft for cracks, wear or damage.

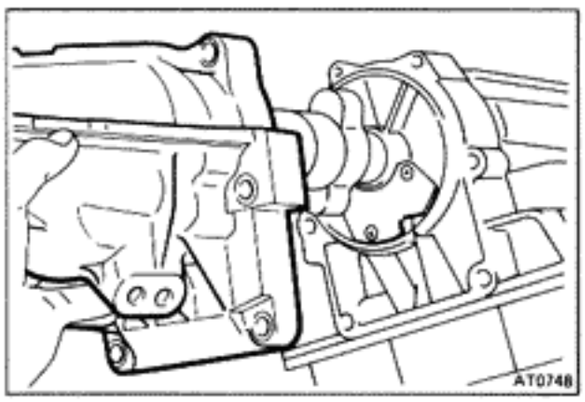

INSTALLATION OF EXTENSION HOUSING

NOTE: If necessary, install a new oil seal before installation. (See page AT-103)

1. INSTALL NEW GASKET AND EXTENSION HOUSING ON TRANSMISSION

Install the six bolts finger tight, then torque them.

NOTE: The two lower bolts are shorter.

Torque: 345 kg-cm (25 ft-lb, 34 N·m)

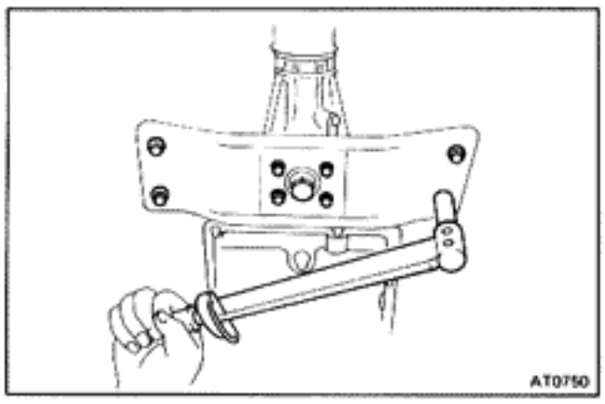

2. INSTALL REAR SUPPORT MEMBER

(a) Install the support member to the chassis and lower the transmission to allow installation of the center bolts.

(b) Install the ground strap and rubber exhaust hanger.

3. INSTALL PROPELLER SHAFT

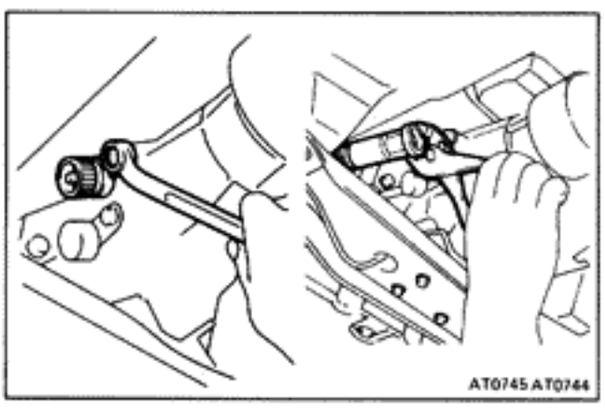

4. INSTALL SPEED SENSOR

5. INSTALL SPEEDOMETER DRIVEN GEAR

(a) Install a new O-ring on the shaft sleeve.

(b) Install the lock plate with a bolt and washer.

6. CONNECT SPEEDOMETER CABLE

Place the felt dust protector and washer on the end of the cable. Tighten the collar with pliers.

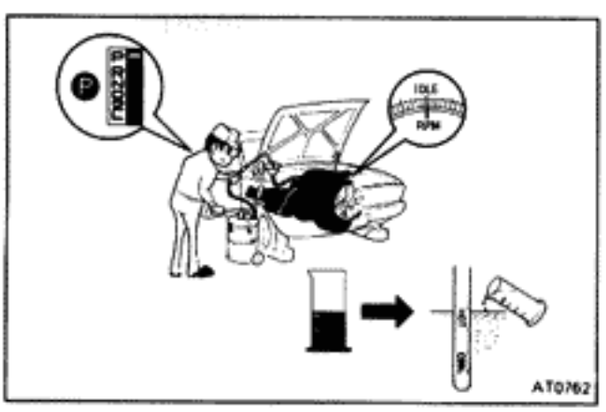

7. LOWER VEHICLE AND CHECK FLUID LEVEL (See page MA-13)

Start the engine, shift the selector into each gear, then check the fluid level with the transmission in "P" range. Add fluid as necessary.

CAUTION: Do not overfill.

Fluid type: ATF DEXRON® II

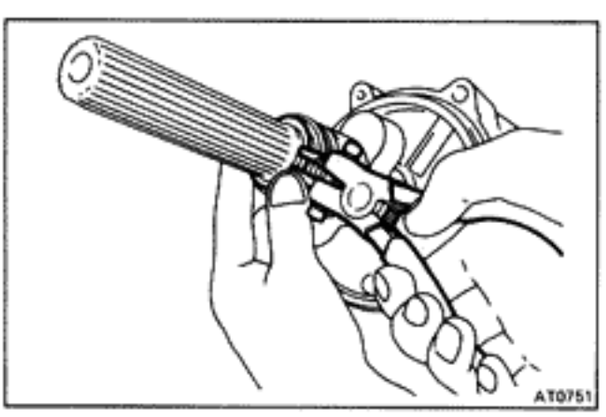

REMOVAL OF ROTOR SENSOR

1. REMOVE EXTENSION HOUSING (See page AT-38)

2. REMOVE SPEEDOMETER DRIVE GEAR

(a) Using snap ring pliers, remove the snap ring.

(b) Slide off the speedometer gear.

(c) Remove the lock ball.

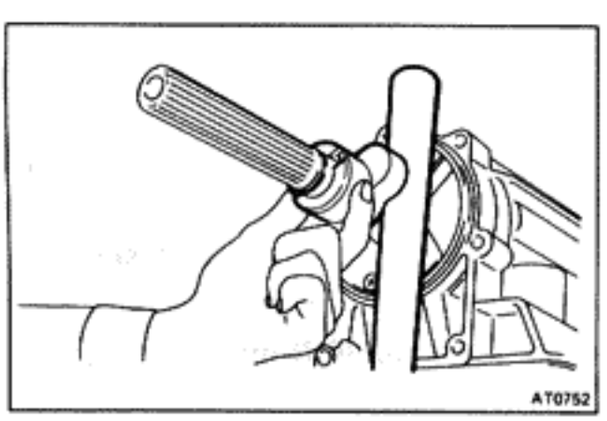

3. REMOVE ROTOR SENSOR FROM OUTPUT SHAFT

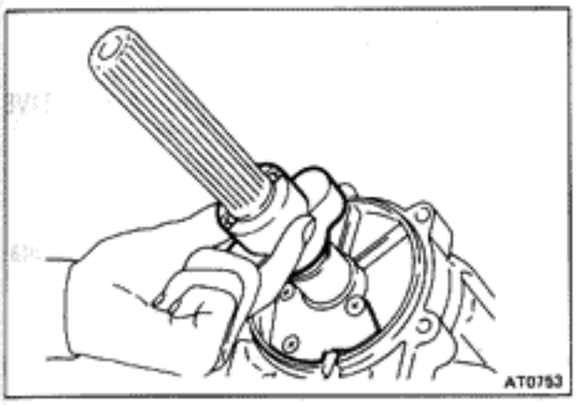

INSTALLATION OF ROTOR SENSOR

1. **INSTALL ROTOR SENSOR ON OUTPUT SHAFT**
   (a) Make sure that the key is installed in the groove.
   (b) Install the rotor sensor on the shaft.

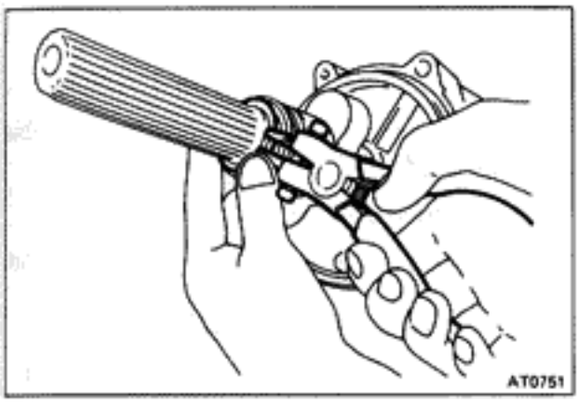

2. **INSTALL SPEEDOMETER DRIVE GEAR**
   (a) Slide the lock ball and the speedometer gear on the shaft.
   (b) Using snap ring pliers, install the outer snap ring.
3. **INSTALL EXTENSION HOUSING (See page AT-39)**

REPLACEMENT OF REAR OIL SEAL

1. **RAISE VEHICLE, AND POSITION PAN TO CATCH ANY FLUID THAT MAY DRIP**
2. **REMOVE PROPELLER SHAFT**

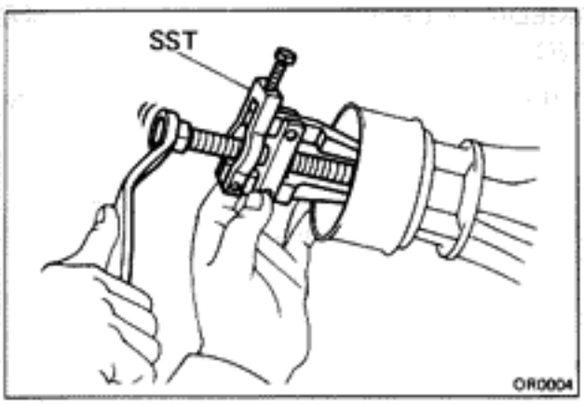

3. **REMOVE REAR DUST SEAL AND OIL SEAL**
   CAUTION: Clean the rear extension housing before removing the seal.
   Using SST, remove the two seals.
   SST 09308-10010

4. **INSTALL NEW OIL SEAL AND DUST SEAL**
   Using SST, drive in the oil seal as far as it will go. Drive in the dust seal flush with the housing.
   SST 09325-20010

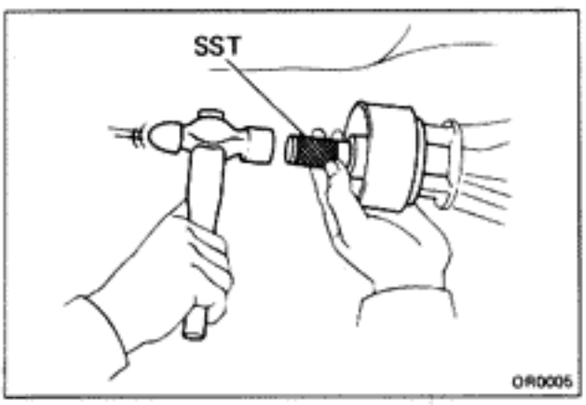

5. **INSTALL PROPELLER SHAFT**
6. **LOWER VEHICLE AND CHECK FLUID LEVEL (See page MA-13)**
   Start the engine, shift the selector into each gear, then check the fluid level with the transmission in "P" range. Add fluid as necessary.
   Fluid type: ATF DEXRON® II
   CAUTION: Do not overfill.

REMOVAL OF TRANSMISSION

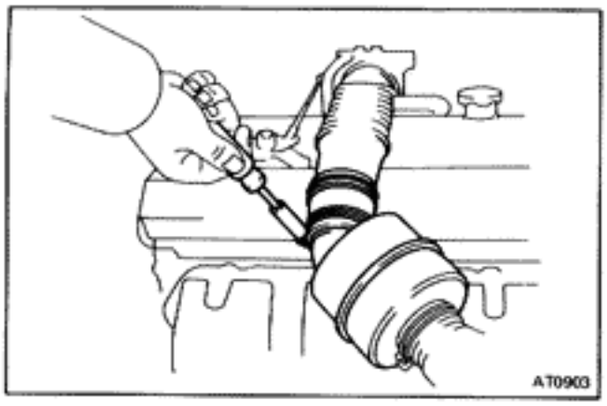

1. DISCONNECT BATTERY CABLE FROM NEGATIVE TERMINAL

2. DRAIN COOLANT

Open the radiator drain cock and drain coolant into a suitable container.

3. DISCONNECT UPPER RADIATOR HOSE

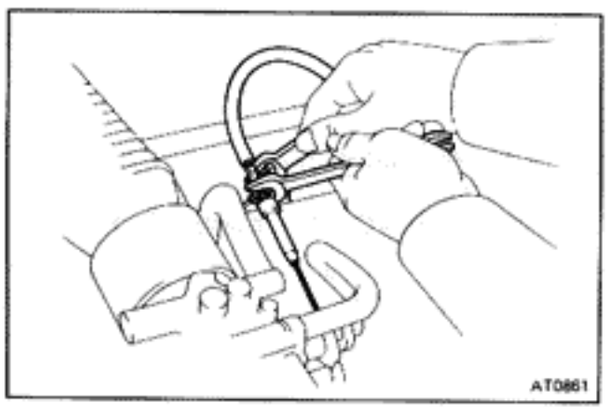

4. DISCONNECT AIR INTAKE CONNECTOR

5. DISCONNECT TRANSMISSION THROTTLE CABLE

(a) Loosen the adjusting nuts, and disconnect the cable housing from the bracket.

(b) Disconnect the cable from the throttle linkage.

(c) Disconnect the throttle cable from the engine rear end.

6. RAISE VEHICLE AND DRAIN TRANSMISSION

CAUTION: Be sure the vehicle is securely supported.

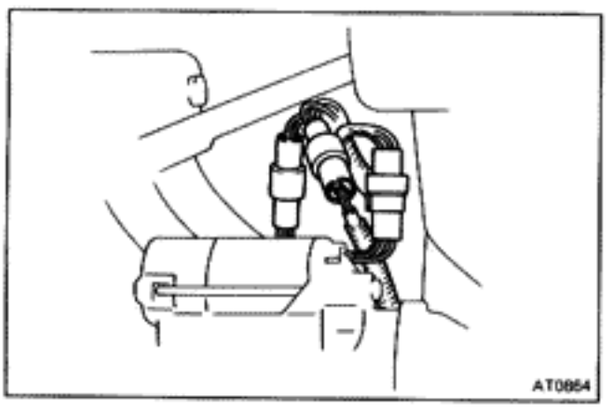

7. DISCONNECT THREE WIRING CONNECTORS

Disconnect the three connectors located near the starter.

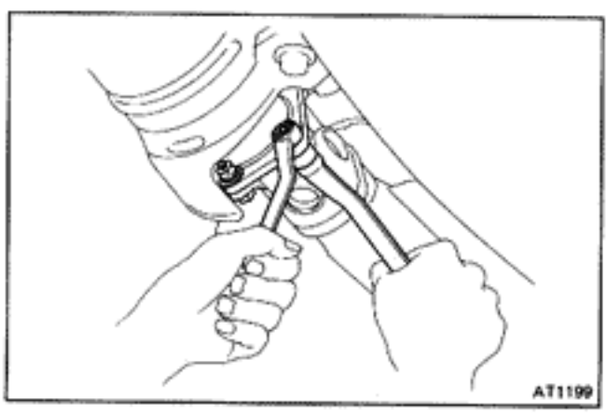

8. REMOVE INTERMEDIATE PROPELLER SHAFT TOGETHER CENTER BEARING

(a) Disconnect the propeller shaft from the intermediate shaft.

(b) Remove the center bearing.

(c) Remove the intermediate shaft.

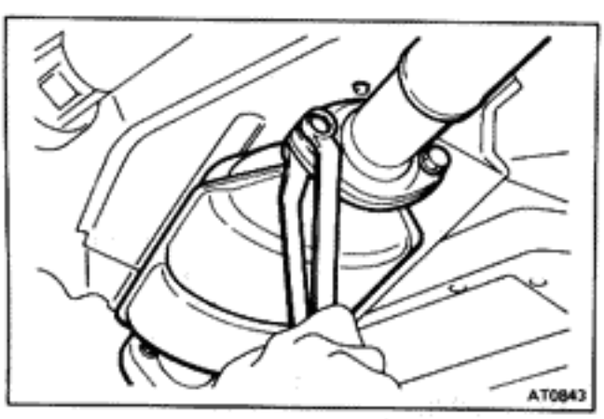

9. DISCONNECT EXHAUST PIPE FROM TAIL PIPE

(a) Disconnect the pipe at the rear side of the converter.

(b) Remove the two rubber hangers.

(c) Remove the pipe clamp from the transmission case.

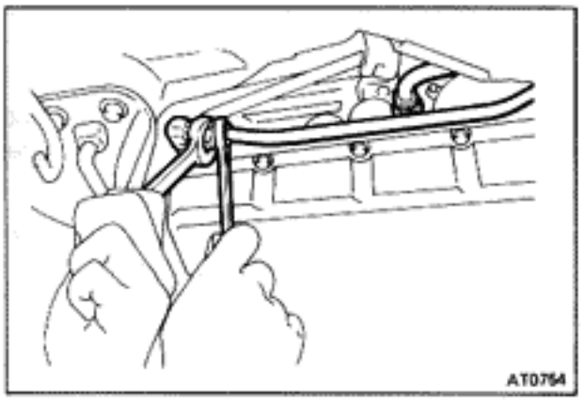

10. DISCONNECT TWO OIL COOLER LINES

(a) Remove the oil cooler pipe clamp from the transmission case.

(b) Disconnect the two oil cooler pipes from the transmission case.

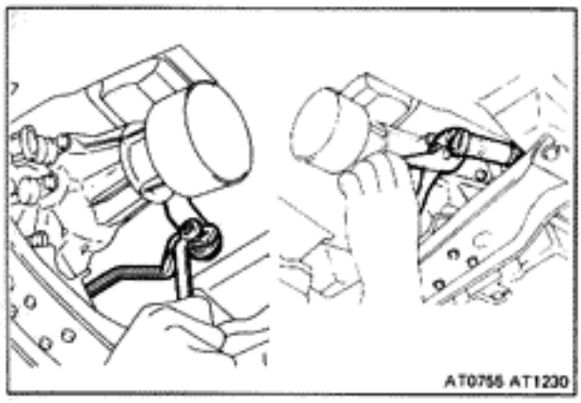

11. DISCONNECT MANUAL SHIFT LINKAGE

Disconnect the shift linkage at the rear connection.

12. DISCONNECT SPEEDOMETER CABLE

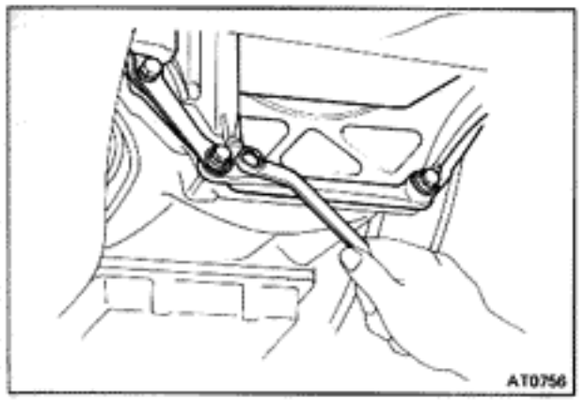

13. REMOVE EXHAUST PIPE BRACKET AND CONVERTER COVER BOTH STIFFENER PLATES FROM TRANSMISSION HOUSING AND CYLINDER BLOCK

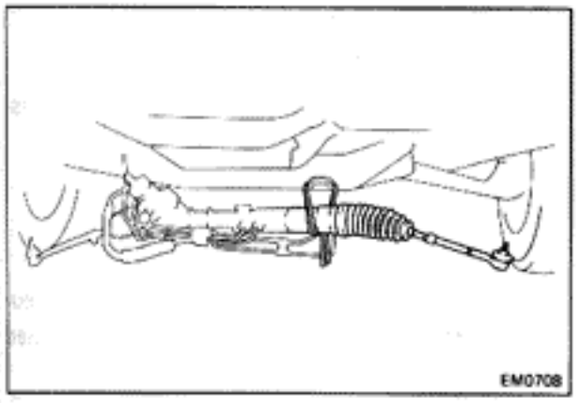

14. REMOVE POWER STEERING GEAR HOUSING

(a) Remove the sliding yoke from gear housing.

(b) Disconnect both tie rod ends with SST.

SST 09611-22012

(c) Remove the fluid line clamps.

(d) Remove the four bolts and remove the two brackets and rubber insulator.

(e) Remove the gear housing from the crossmember and suspend it with strings.

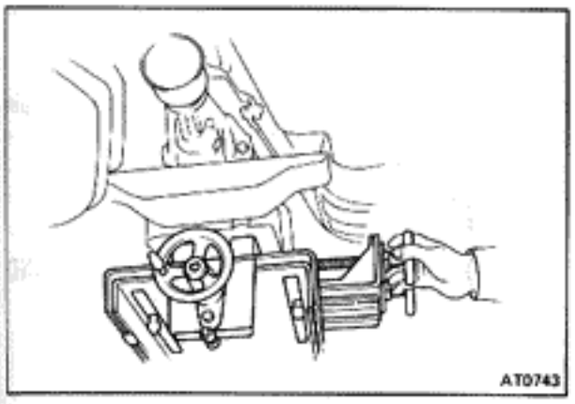

15. JACK UP TRANSMISSION SLIGHTLY

If a transmission jack is not available, be sure to put a wooden block between the jack and the transmission pan to prevent damage.

Raise the transmission enough to remove the weight from the rear support member.

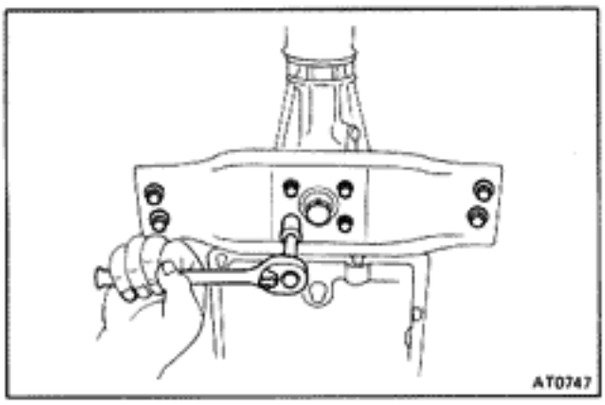

16. REMOVE REAR SUPPORT MEMBER

(a) Remove the ground cable.

(b) Install a wooden block between cowl panel and cylinder head rear end to prevent damage to the heater hose.

(c) Remove the eight bolts, and remove the rear support member.

17. REMOVE ENGINE UNDER COVER

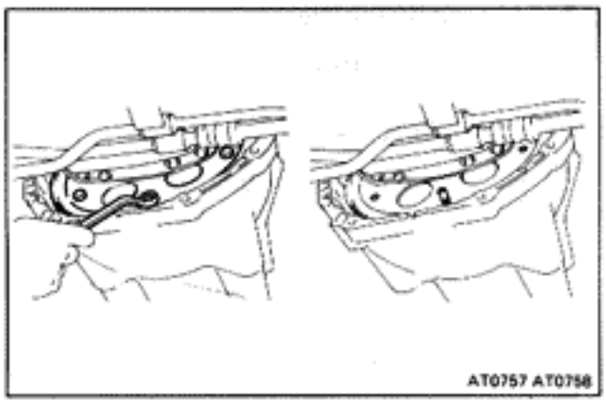

18. REMOVE SIX TORQUE CONVERTER MOUNTING BOLTS

Turn the crankshaft to gain access to each bolt.

Remove the six bolts.

19. INSTALL GUIDE PIN IN TORQUE CONVERTER

Install the guide pin in one of the torque converter bolt holes.

If necessary, a guide pin can be made by cutting off the head of a bolt.

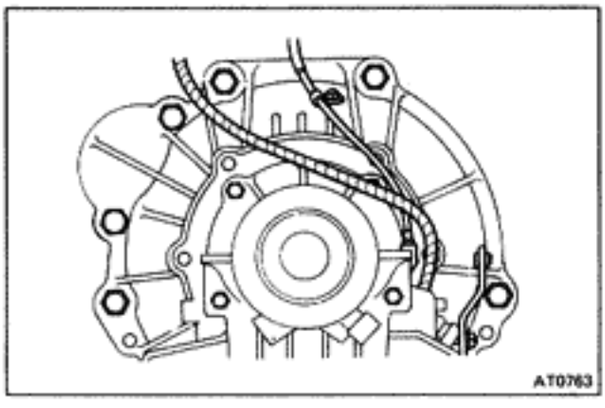

20. REMOVE TRANSMISSION HOUSING MOUNTING BOLTS

(a) Remove the starter.

(b) Remove the transmission housing mounting bolts.

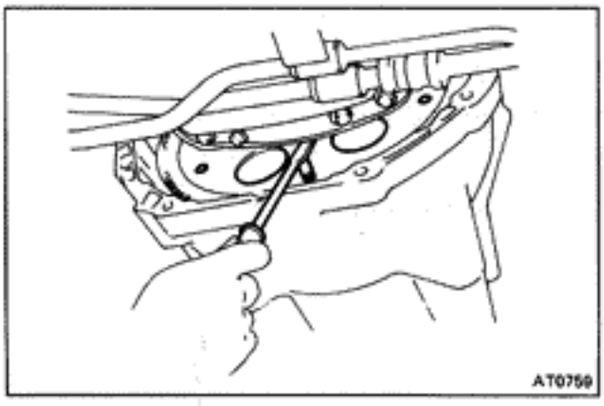

21. PRY ON END OF GUIDE PIN TO BEGIN MOVING TRANSMISSION WITH CONVERTER TOWARD REAR

The guide pin helps keep the converter with the transmission.

22. REMOVE TRANSMISSION ASSEMBLY

Draw out the transmission down and toward the rear.

CAUTION: Be careful not to snag the throttle cable or neutral start switch cable. Keep the oil pan positioned downward.

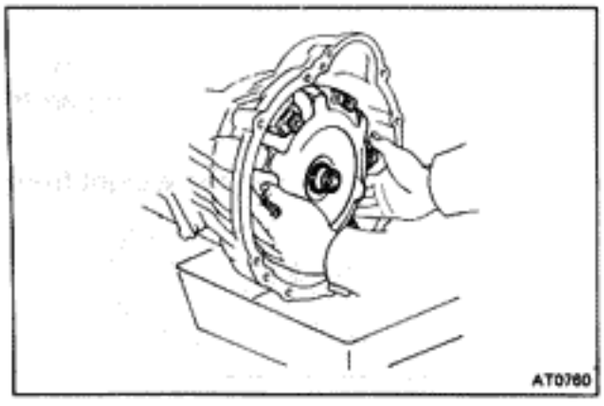

23. PLACE PAN UNDER CONVERTER HOUSING, AND REMOVE CONVERTER

Pull the converter straight off, and allow the fluid to drain into the pan.

24. REMOVE FILLER TUBE

25. REMOVE REAR TRANSMISSION MOUNT WITH GROUND STRAP

DISASSEMBLY OF TRANSMISSION

SEPARATE BASIC SUBASSEMBLY

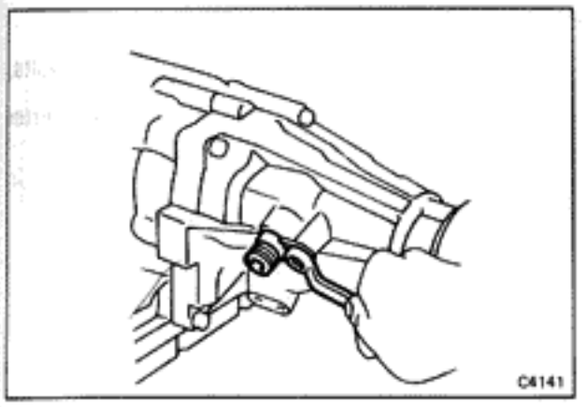

1. REMOVE SPEEDOMETER DRIVEN GEAR

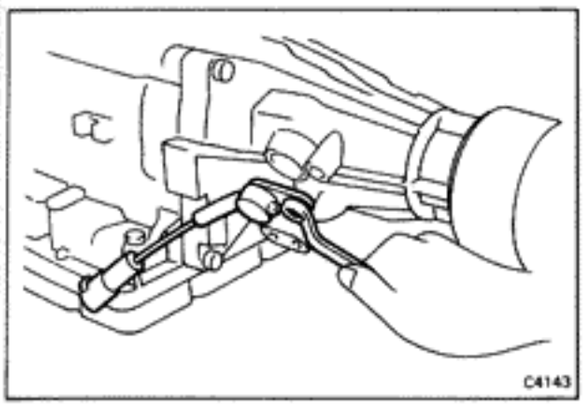

2. REMOVE SPEED SENSOR

(a) Disconnect the wiring connector.

(b) Remove the speed sensor.

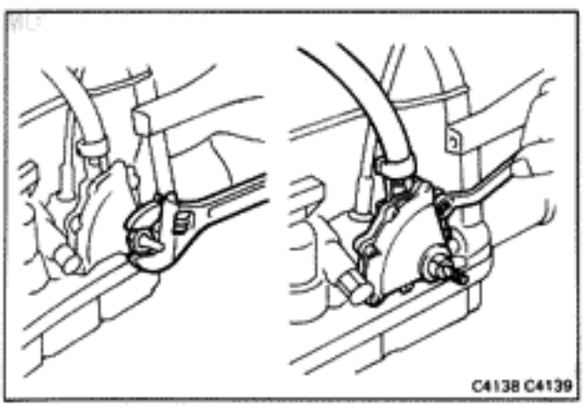

3. REMOVE SHIFT HANDLE

4. REMOVE NEUTRAL START SWITCH

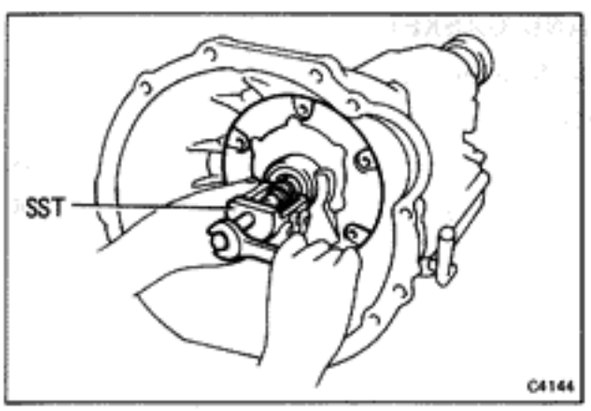

5. REMOVE OIL PUMP

(a) Remove the seven bolts.

(b) Position SST on the shaft in back of the spline.

SST 09610-20012

CAUTION: Do not damage the shaft bushing surface. Turn the end bolt of SST to free the pump.

(c) Grasp the front pump stator shaft and pull the pump from the case.

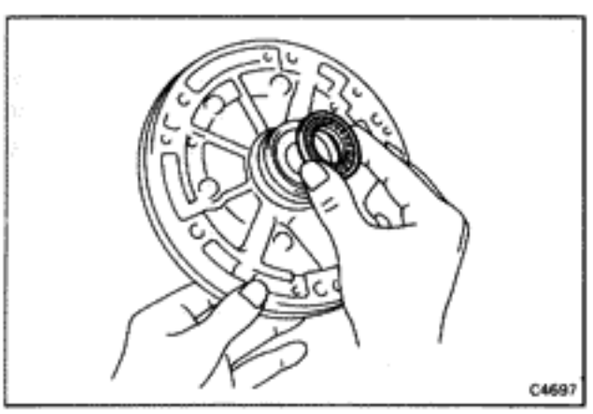

6. WATCH FOR BEARING BEHIND OIL PUMP

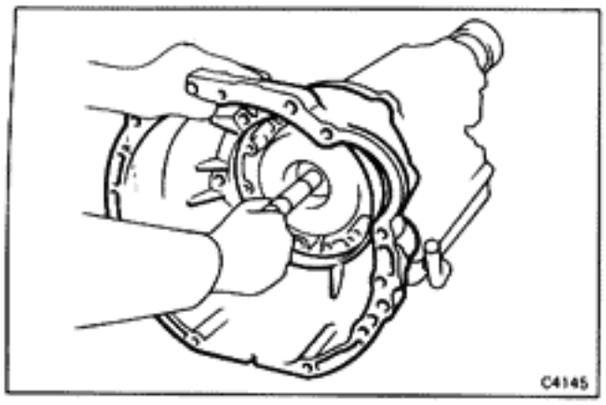

7. REMOVE CONVERTER HOUSING

(a) Remove the two 12-mm bolts and four 10-mm bolts.

(b) Hold the input shaft while removing the converter housing.

8. REMOVE EXTENSION HOUSING AND GASKET

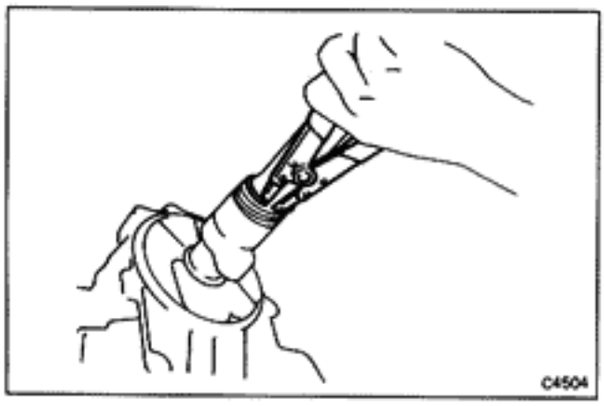

9. REMOVE SPEEDOMETER DRIVE GEAR

(a) Remove the snap ring.

(b) Remove the drive gear and the steel ball.

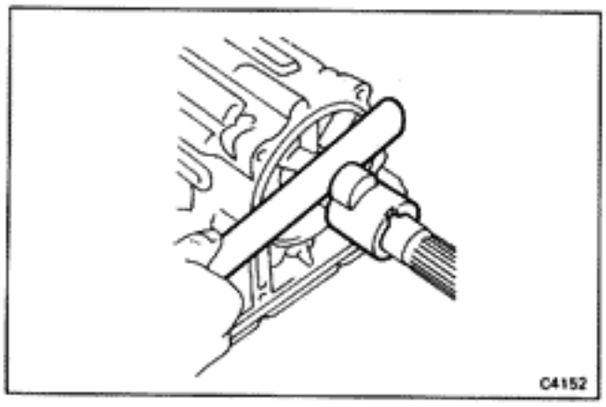

10. REMOVE SENSOR ROTOR, KEY AND SNAP RING FROM OUTPUT SHAFT

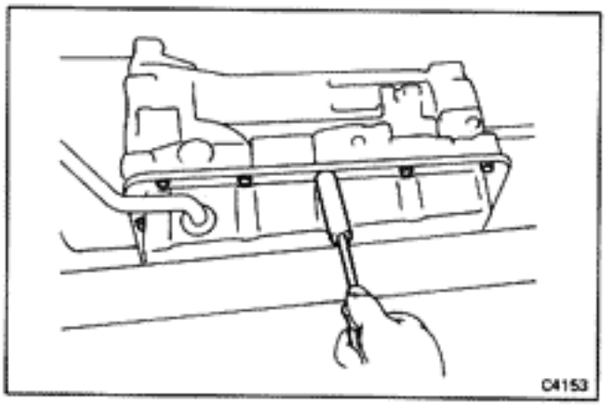

11. REMOVE PAN AND GASKET

(a) Remove the fourteen bolts.

(b) Remove the pan by lifting the transmission case.

NOTE: Do not turn the transmission over as this will contaminate the valve body with foreign materials in the bottom of the pan.

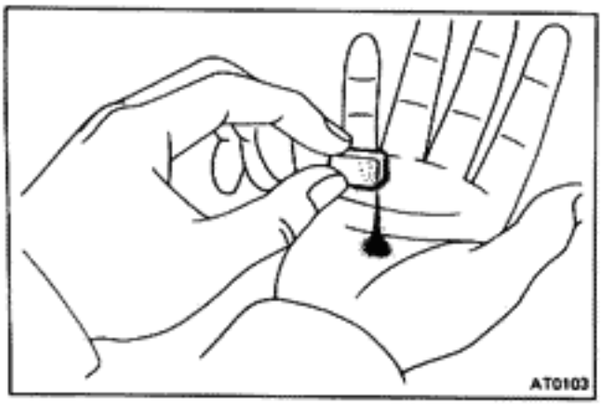

12. EXAMINE PARTICLES IN PAN

Remove the magnet and use it to collect any steel chips. Look carefully at the chips and particles in the pan and on the magnet to anticipate what type of wear you will find in the transmission:

Steel (magnetic) = bearing, gear and clutch plate wear.

Brass (nonmagnetic) = bushing wear.

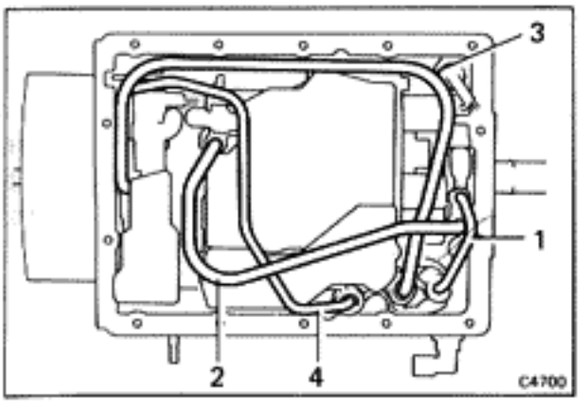

13. TURN TRANSMISSION OVER AND REMOVE TUBES

Pry up both tube ends with a large screwdriver and remove the four tubes.

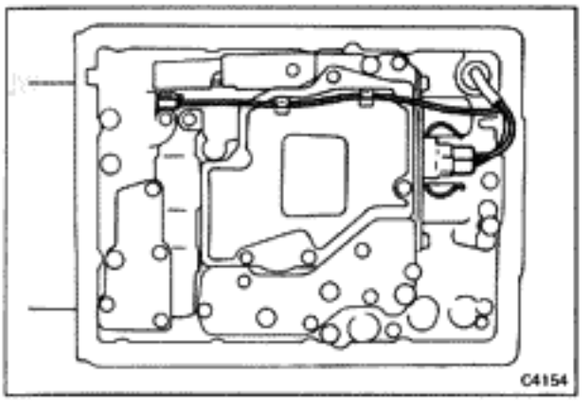

14. REMOVE SOLENOID WIRING

(a) Disconnect connector from the No. 1 and 2 solenoid and the No. 3 solenoid.

(b) Remove the grommet from the transmission case.

(c) Pull the wiring out of the transmission case.

15. REMOVE STRAINER

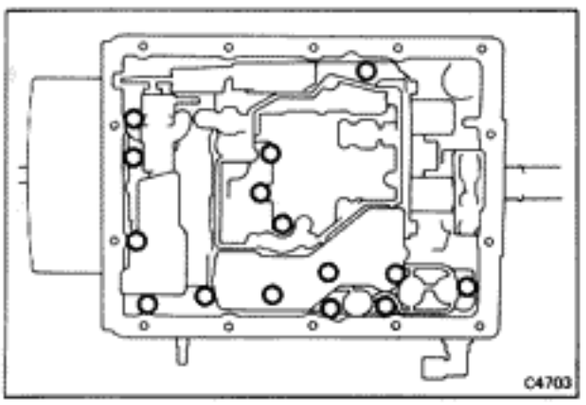

16. REMOVE VALVE BODY

(a) Remove the fifteen bolts.

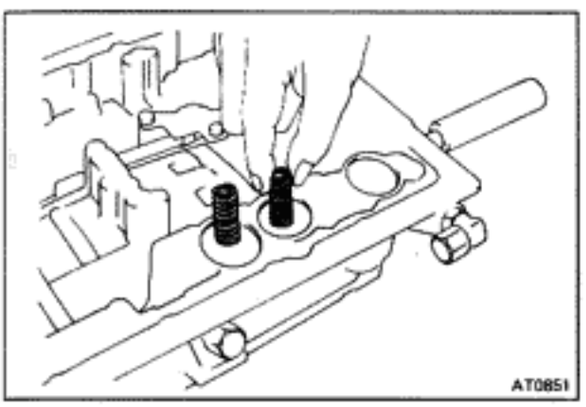

(b) Remove the B_2 and C_2 accumulator piston springs.

(c) Disconnect the throttle cable from the cam and remove the valve body.

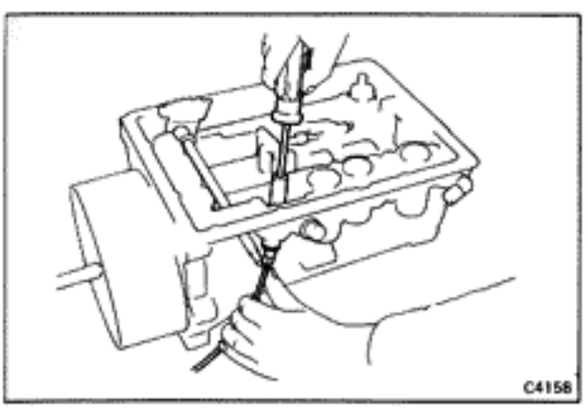

17. REMOVE THROTTLE CABLE AND RETAINER

Using a 10-mm socket, push the plastic throttle cable retainer out of the transmission case.

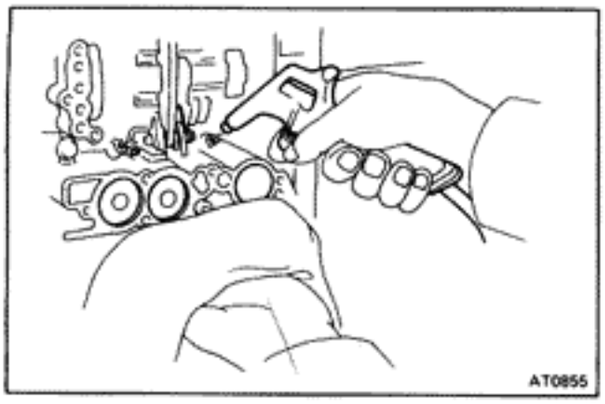

18. COVER PISTON WITH A RAG AND REMOVE ACCUMULATOR PISTONS AND SPRINGS

WARNING: Keep face away to avoid injury.

Position a rag to catch each piston. Using low-pressure compressed air (1 kg/cm², 14 psi or 98 kPa, max.), pop each piston into the rag. Force air into the holes shown, and remove the pistons and springs.

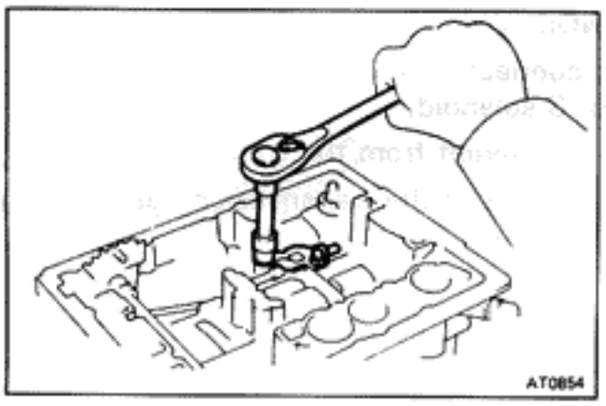

19. REMOVE PARKING LOCK ROD

20. REMOVE SPRING, PIVOT PIN AND PARKING LOCK PAWL

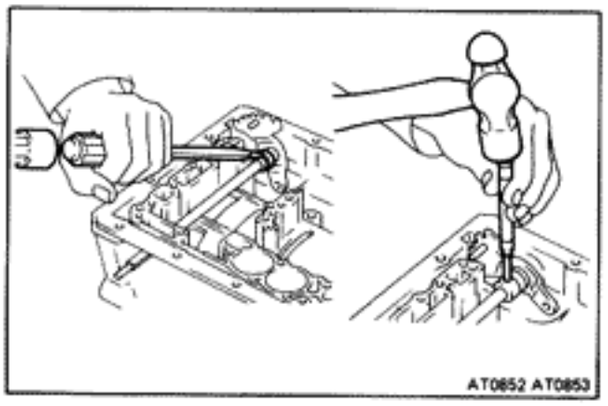

21. IF NECESSARY, REMOVE MANUAL LEVER SHAFT

(a) Using a hammer and screwdriver, pry and shift the collar.

(b) Using a hammer and punch, drive out the pin.

(c) Slide the shaft out case and remove the detent plate.

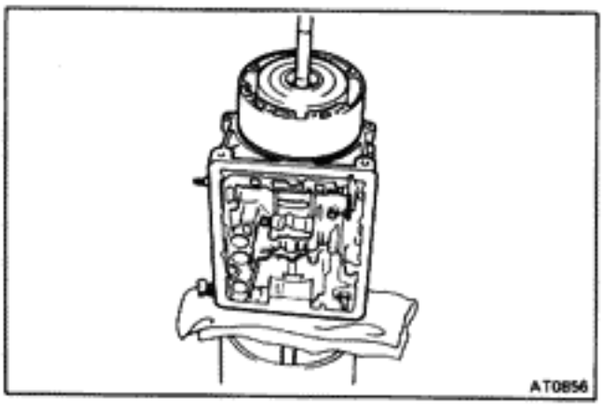

22. PLACE TRANSMISSION CASE ON CYLINDER

Place the transmission on a cylindrical stand for more efficient work.

CAUTION: Place shop rags between the case and stand to avoid damaging the case.

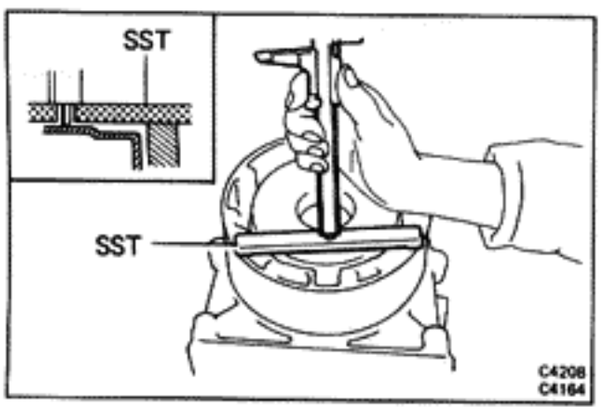

23. MEASURE DISTANCE BETWEEN TOP OF CASE AND CLUTCH DRUM

Set SST on the case as shown in the figure.

SST 09350-20013 (09370-12010)

Make a note of the finding for reassembly.

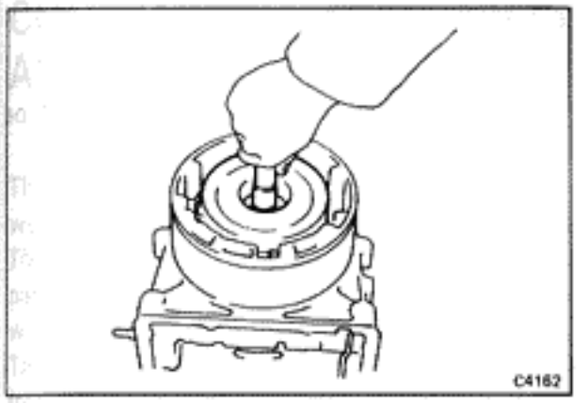

24. REMOVE OVERDRIVE CLUTCH

Grasp the shaft and pull out the overdrive clutch assembly.

Watch for the bearings and races on both sides of the assembly.

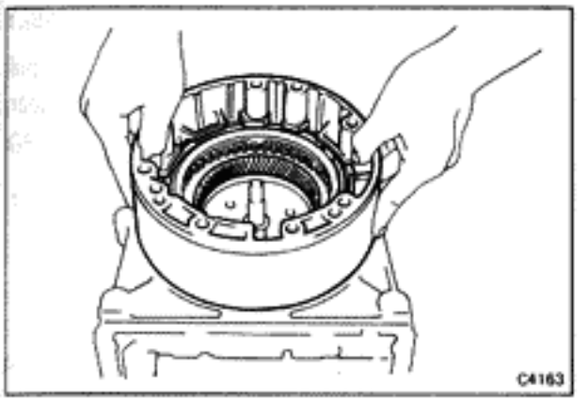

25. REMOVE OVERDRIVE CASE AND BRAKE

Hold both sides of the overdrive case and pull it out from the transmission case. Watch for the bearings and races on both sides of the assembly.

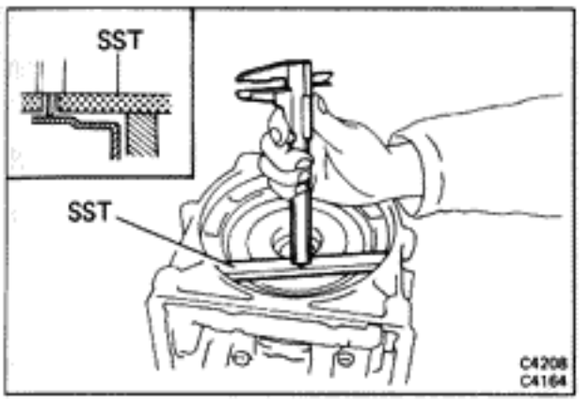

26. MEASURE DISTANCE BETWEEN TOP OF CASE AND CLUTCH DRUM

Set SST on the case as shown in the figure.

SST 09350-20013 (09370-12010)

Make a note of the finding for reassembly.

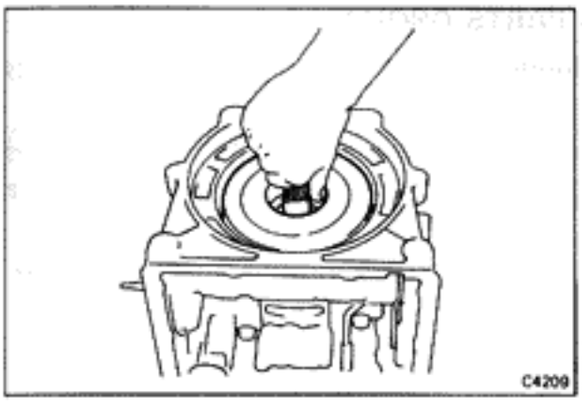

27. REMOVE FRONT CLUTCH AND BEARINGS

Grasp the shaft and pull out the front clutch assembly.

Watch for the bearings and races on both sides of the assembly.

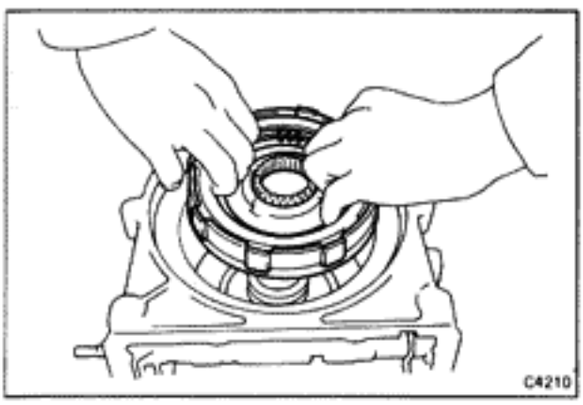

28. REMOVE REAR CLUTCH

Grasp the clutch hub and pull it out from the case.

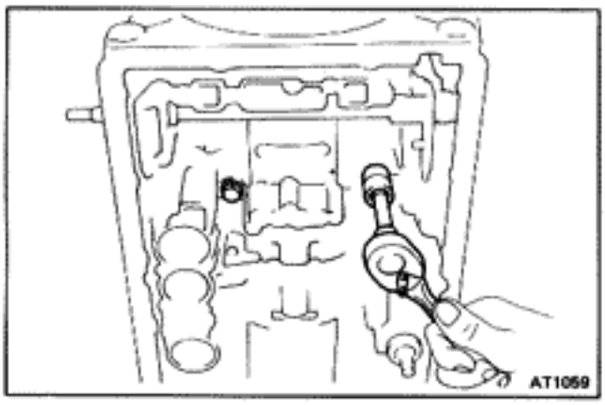

29. REMOVE CENTER SUPPORT BOLTS

Remove the two center support bolts.

NOTE: After removing one bolt, the other one will be loose.

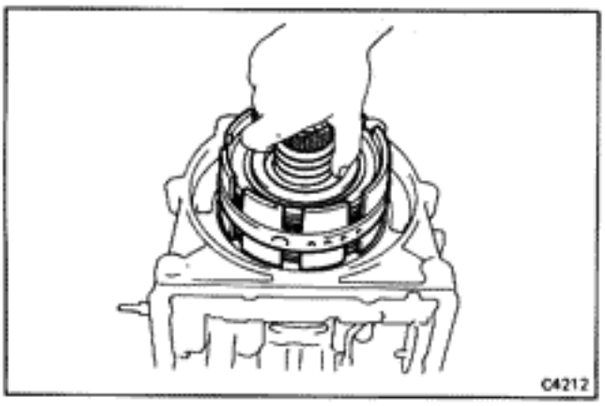

30. REMOVE CENTER SUPPORT AND SUN GEAR ASSEMBLY

From the case front opening, grasp the assembly and pull it out. Watch for the bearing race on the end of the sun gear.

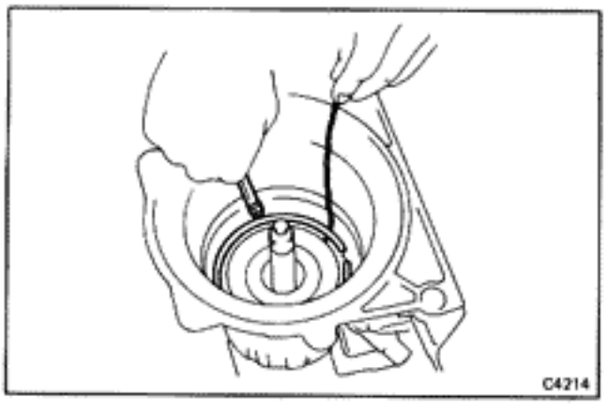

31. REMOVE REACTION PLATE RETAINING RING

Using a long screwdriver, compress the snap ring and lift it above the groove with a wire hook.

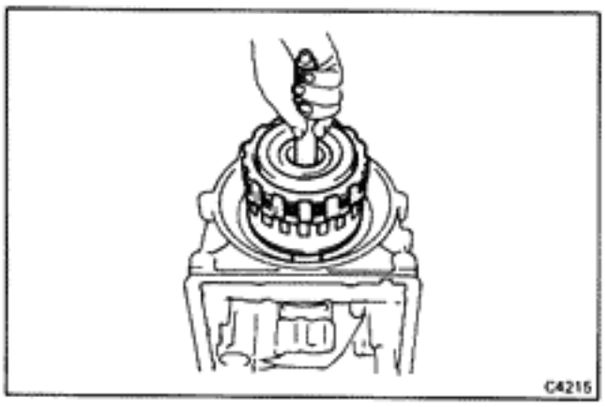

32. REMOVE REAR PARTS GROUP

Grasp the intermediate shaft and pull out the rear parts group.

If the brake apply tube and rear thrust bearing and races do not come out with the assembly, remove them from the case.

Watch for the bearing and race in the transmission case.

33. BASIC DISASSEMBLY IS COMPLETE

The transmission in now in basic component subassemblies. Next, disassemble, clean, inspect, repair and assemble each of these component groups.

COMPONENT GROUP DISASSEMBLY, INSPECTION AND ASSEMBLY

The instructions here are organized so that you work on only one component group at a time. This will help avoid confusion of similar-looking parts from different subassemblies being on your workbench at the same time.
The component groups are inspected and repaired from the converter housing side.

As much as possible, complete the inspection, repair, assembly before proceeding to the next component group. If a component group cannot be assembled because parts are being ordered, be sure to keep all parts of that group in a separate container while proceeding with disassembly, inspection, repair and assembly of other component groups.

GENERAL CLEANING

1. All disassembled parts should be washed clean and the fluid passages and holes blown through with compressed air to make sure that they are not clogged.
2. Cleaning solvent used should be the recommended ATF or kerosene.
3. When using compressed air to dry parts, keep face away to avoid spraying solvent in your face.

PARTS ARRANGEMENT

1. After cleaning, the parts should be arranged in proper order to allow performing the inspection, repairs, and reassembly with efficiency.
2. New brakes and clutches that are to be used for replacement must be soaked in transmission fluid for at least two hours before assembly.
3. When disassembling a valve body, be sure to keep each valve together with the corresponding spring.

GENERAL ASSEMBLY

1. All oil seal rings, clutch discs, clutch plates, rotating parts, and sliding surfaces should be coated with transmission fluid prior to reassembly.
2. If a worn bushing is to be replaced, the replacement must be made with the subassembly containing that bushing.
3. All gaskets and rubber O-rings should be replaced.
4. Check thrust bearings and races for wear or damage. Replace if necessary.
5. Make sure that the ends of a snap ring are not aligned with one of the cutouts and are installed in the groove correctly.
6. Use petroleum jelly to keep parts in place.

Oil Pump

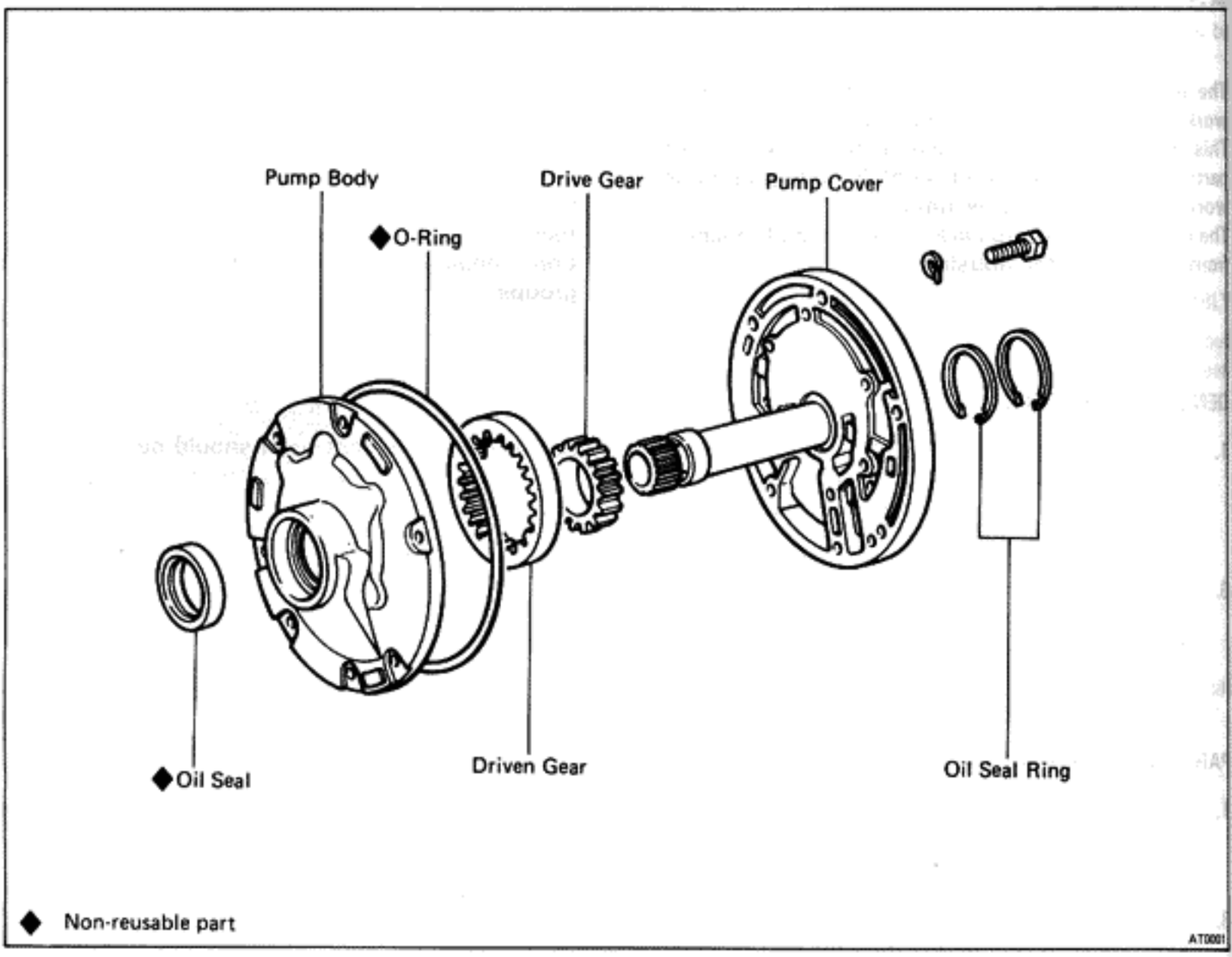

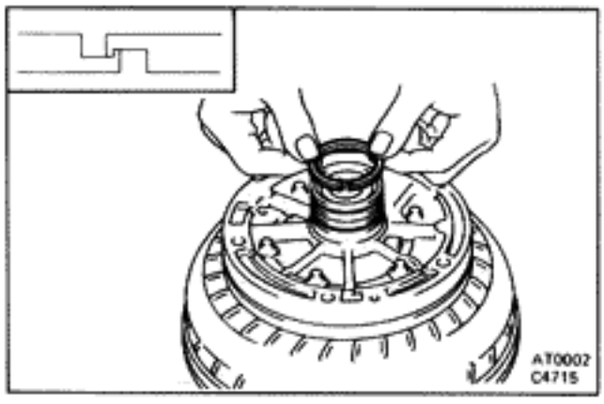

DISASSEMBLY OF OIL PUMP

1. **USE TORQUE CONVERTER AS A WORK STAND**
2. **REMOVE TWO OIL SEAL RINGS FROM PUMP COVER**

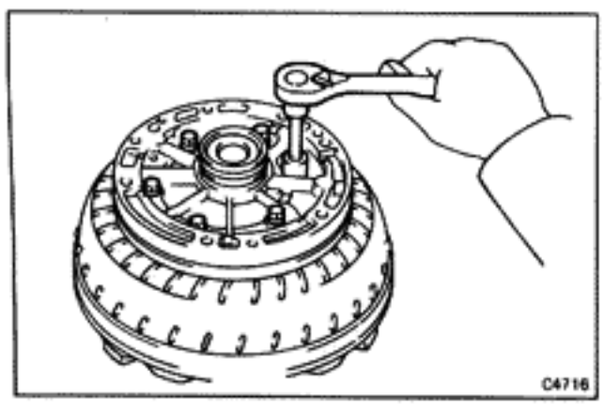

3. **REMOVE PUMP COVER**
4. **REMOVE O-RING FROM PUMP**
5. **LIFT PUMP OFF CONVERTER AND REMOVE OIL PUMP DRIVE GEAR AND DRIVEN GEAR**

   Identify the top and bottom and keep in assembly order.

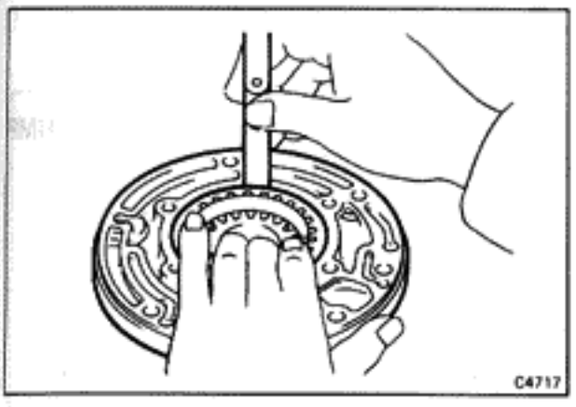

INSPECTION OF OIL PUMP

1. CHECK BODY CLEARANCE OF DRIVEN GEAR

Push the driven gear to one side of the body. Using a feeler gauge, measure the clearance.

Standard body clearance: 0.07 — 0.15 mm (0.0028 — 0.0059 in.)
Maximum body clearance: 0.3 mm (0.012 in.)

If the body clearance is greater than the maximum, replace the drive gear, driven gear or pump body.

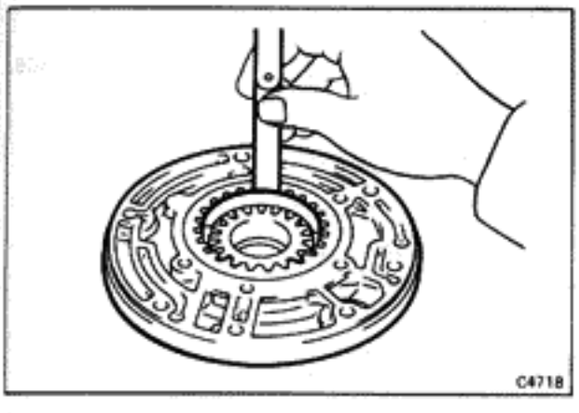

2. CHECK TIP CLEARANCE OF BOTH GEARS

Measure between the gear teeth and the cresent-shaped part of the pump body.

Standard tip clearance: 0.11 — 0.14 mm (0.0043 — 0.0055 in.)
Maximum tip clearance: 0.3 mm (0.012 in.)

If the tip clearance is greater than the maximum, replace the drive gear, driven gear or pump body.

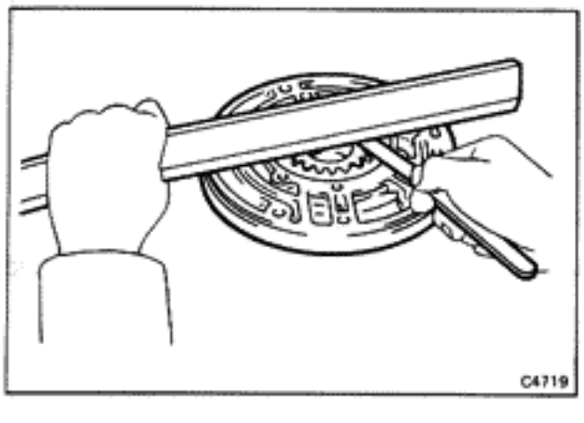

3. CHECK SIDE CLEARANCE OF BOTH GEARS

Using a steel straightedge and a feeler gauge, measure the side clearance of both gears.

Standard side clearance: 0.02 — 0.05 mm (0.0008 — 0.0020 in.)
Maximum side clearance: 0.1 mm (0.004 in.)

If the side clearance is greater than the maximum, replace the drive gear, driven gear or pump body.

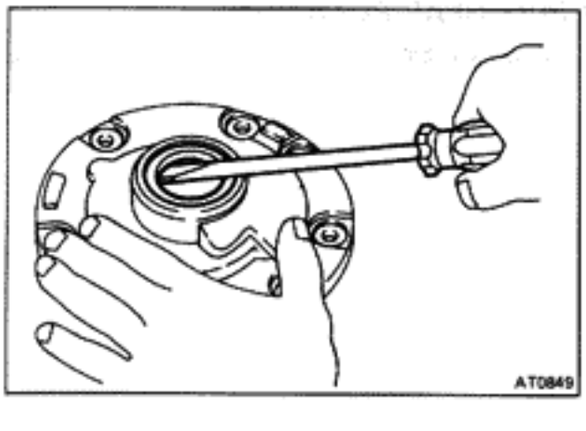

4. INSPECT FRONT OIL SEAL

Check for wear, damage or cracks.

5. IF NECESSARY, REPLACE FRONT OIL SEAL

(a) Pry off the oil seal with a screwdriver.

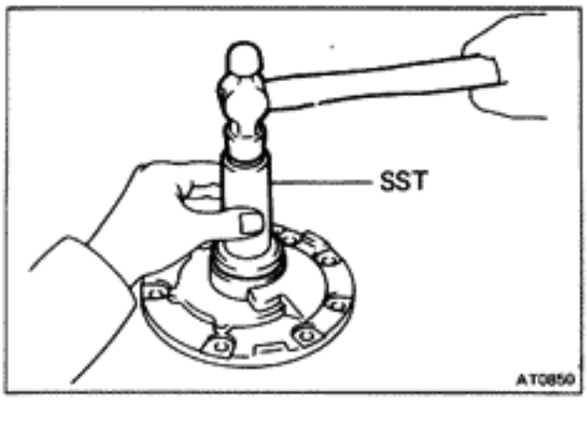

(b) Using SST and a hammer, install a new oil seal. The seal end should be flush with the outer edge of the pump body.

SST 09350-20013 (09388-20010)

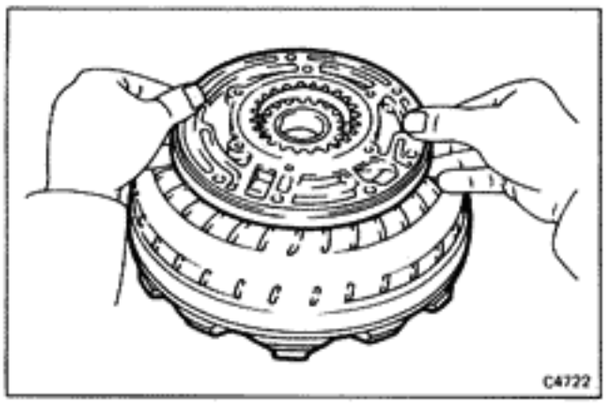

ASSEMBLY OF OIL PUMP

(See page AT-52)

1. **INSTALL DRIVEN GEAR AND DRIVE GEAR AND SET PUMP BODY ON TORQUE CONVERTER**

   Make sure the top of the gears is facing upward.

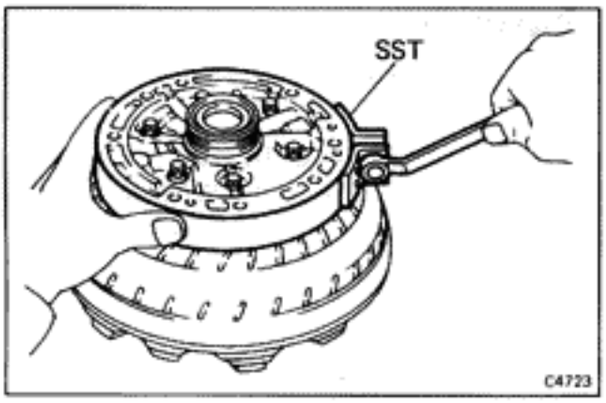

2. **LOOSELY INSTALL PUMP COVER**

   Align the bolt holes and drop the pump cover into place.
   Install the six bolts with wave washers finger tight.

3. **ALIGN PUMP AND PUMP COVER**

   Install the SST around the pump and cover.
   Tighten SST to align the pump and cover.

   SST 09350-20013 (09363-20010)

4. **TIGHTEN SIX PUMP COVER BOLTS**

   Torque: 75 kg-cm (65 in.-lb, 7.4 N·m)

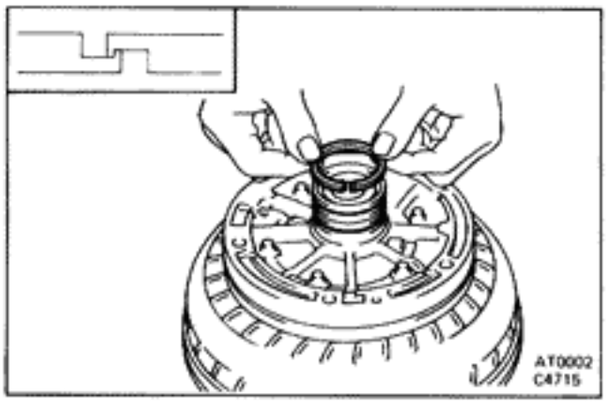

5. **INSTALL TWO OIL SEAL RINGS ON PUMP COVER**

   Spread the rings apart and slide them into the groove.
   Hook both ends by hand.
   Wipe off excess petroleum jelly.

6. **INSTALL NEW O-RING ON PUMP COVER**

   Make sure a new O-ring is not twisted and is fully seated in the groove.

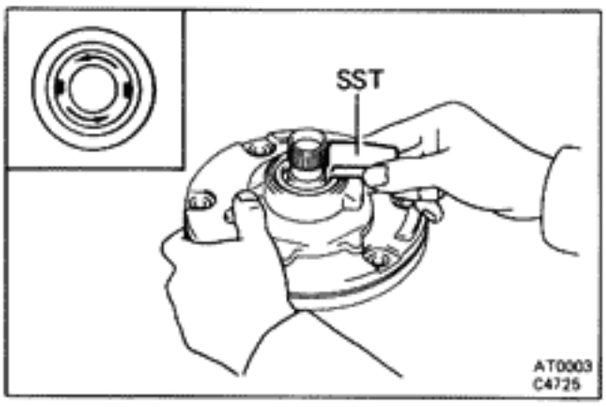

7. **CHECK PUMP DRIVE GEAR ROTATION**

   Turn the drive gear with SST and make sure that it rotates smoothly.

   SST 09350-20013 (09397-22020)

Overdrive Input Shaft and Clutch

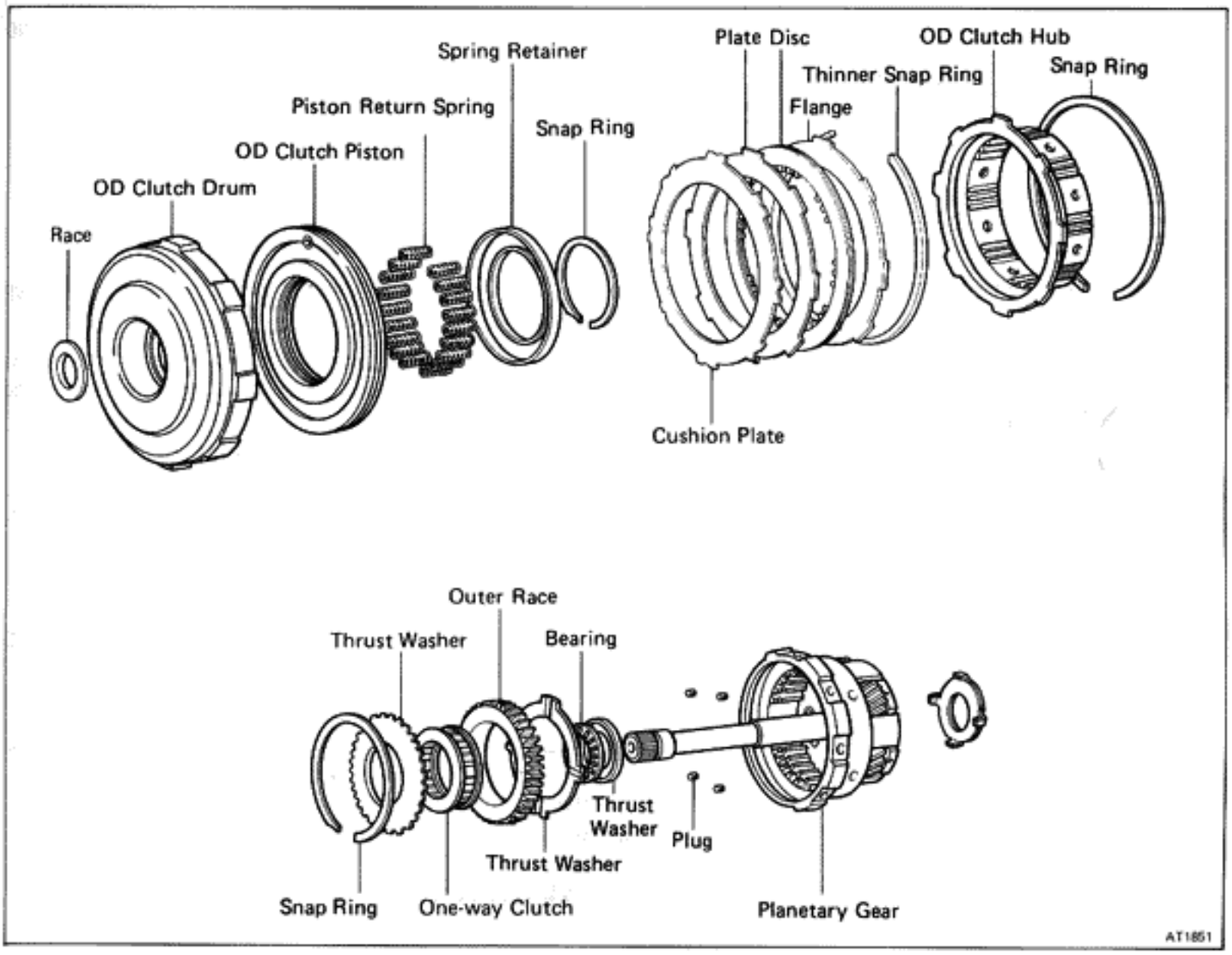

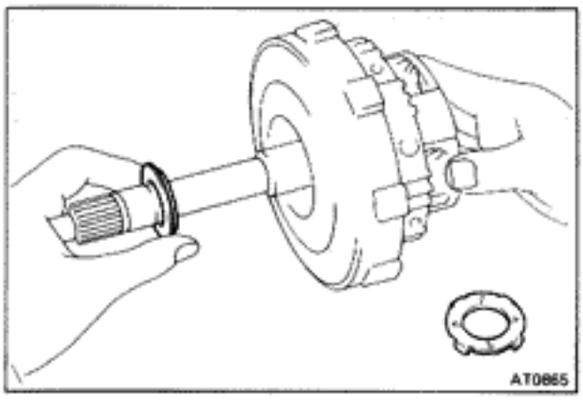

DISASSEMBLY OF OVERDRIVE INPUT SHAFT AND CLUTCH

1. **REMOVE THRUST BEARINGS AND RACES FROM OVERDRIVE INPUT SHAFT**
   (a) Slide off the thrust bearing and race from the clutch side by hand. Note the position of the races.
   (b) Using a screwdriver, pry off the thrust washer from the planetary gear side.

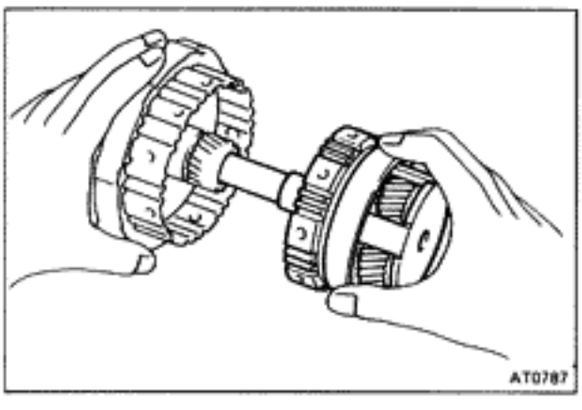

2. **PULL OVERDRIVE CLUTCH ASSEMBLY FROM INPUT SHAFT**

   CAUTION: Be careful that the thrust bearing and race do not fall out.

3. **REMOVE THRUST BEARING AND RACE**

   Note the position of the race.

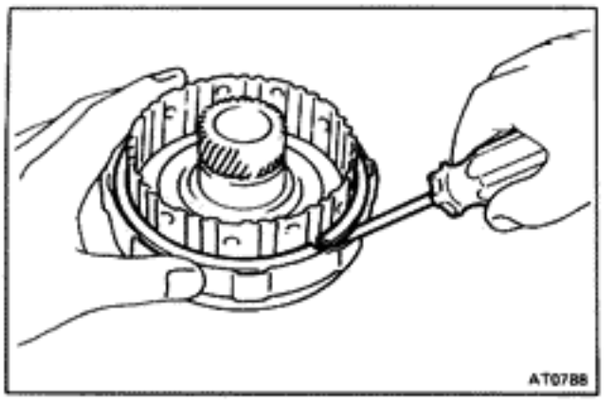

4. **REMOVE SNAP RING AND HUB FROM OVERDRIVE CLUTCH ASSEMBLY**

5. **REMOVE THINNER SNAP RING, FLANGE, DISC AND PLATE**

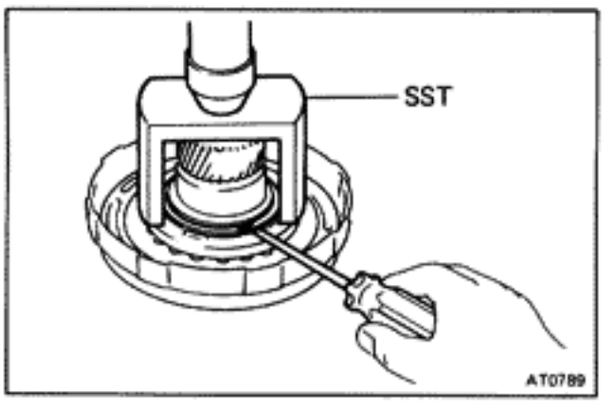

6. **COMPRESS PISTON RETURN SPRINGS AND REMOVE SNAP RING**

   Place SST on the spring retainer and compress the springs with a shop press. Using a screwdriver, remove the snap ring.

   SST 09350-20013 (09369-20040)

7. **REMOVE SPRING RETAINER AND EIGHTEEN SPRINGS**

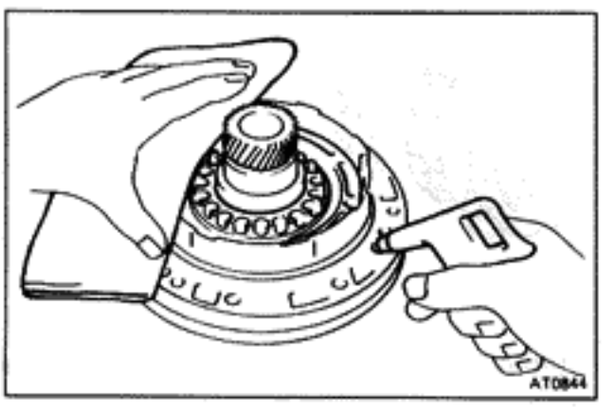

8. **ASSEMBLE OVERDRIVE CLUTCH ON OIL PUMP AND BLOW OUT PISTON**
   (a) Slide the overdrive clutch onto the oil pump.
   (b) Apply compressed air to the oil pump to remove the piston. (If the piston does not come out completely, use needle-nose pliers to remove it.)
   (c) Remove the overdrive clutch from the oil pump.

9. **REMOVE CLUTCH PISTON O-RINGS**

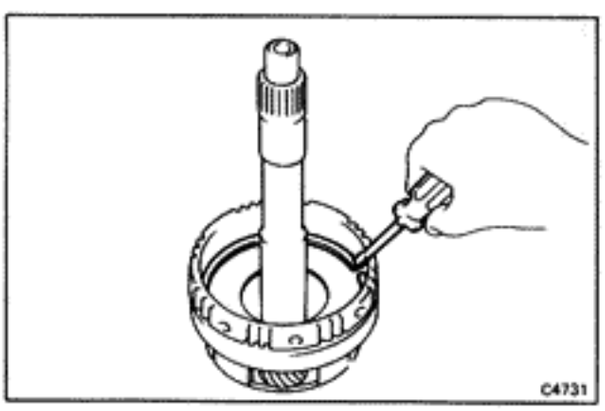

10. **REMOVE SNAP RING FROM OVERDRIVE PLANETARY GEAR ASSEMBLY**

11. **REMOVE THRUST WASHERS AND ONE-WAY CLUTCH FROM PLANETARY GEAR ASSEMBLY**

    CAUTION: Be careful not to lose the four plugs.

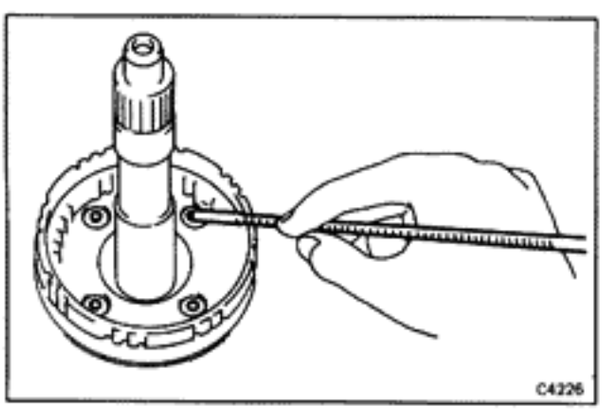

12. **REMOVE FOUR PLUGS WITH MAGNETIC FINGER**

    CAUTION: Keep the four plugs together to prevent losing them.

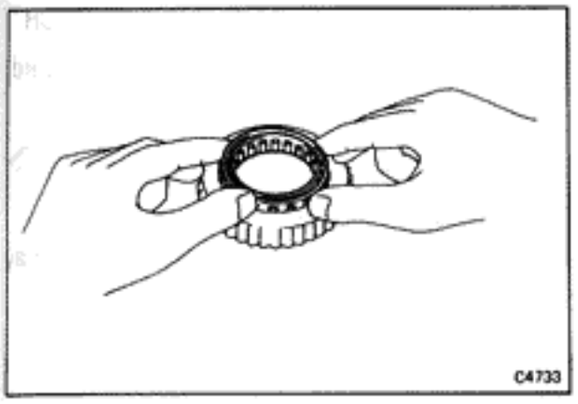

13. REMOVE ONE-WAY CLUTCH FROM OUTER RACE

Note the direction of the one-way clutch.

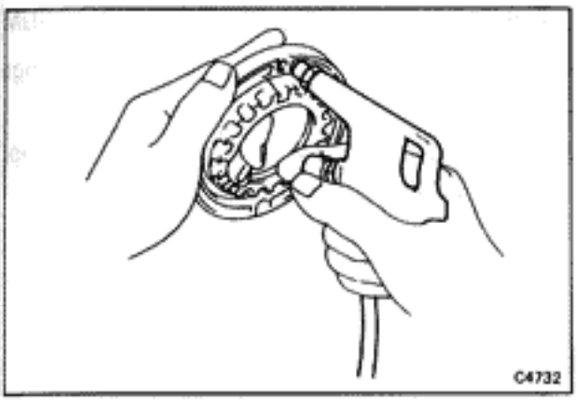

INSPECTION OF OVERDRIVE INPUT SHAFT AND CLUTCH

1. INSPECT CLUTCH PISTON

(a) Check that check ball is free by shaking the piston.

(b) Check that the valve does not leak by applying low-pressure compressed air.

2. INSPECT DISC, PLATE AND FLANGE

Check that the sliding surface of disc is not worn or burnt.

If the disc is worn or burnt, replace disc.

Then check that the sliding surfaces of plate and flange are not worn or burnt.

If necessary, replace them.

NOTE: Do not allow the discs to dry out.
Prepare new discs by soaking them at least two hours in ATF.

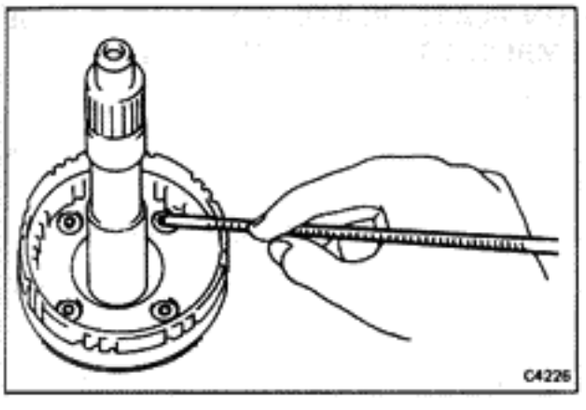

ASSEMBLY OF OVERDRIVE INPUT SHAFT AND CLUTCH

(See page AT-55)

1. INSTALL FOUR PLUGS

2. INSTALL THRUST WASHER AND BEARING

(a) Coat parts with petroleum jelly to hold them in place.

(b) Slide bearing and then thrust washer facing lip outward.

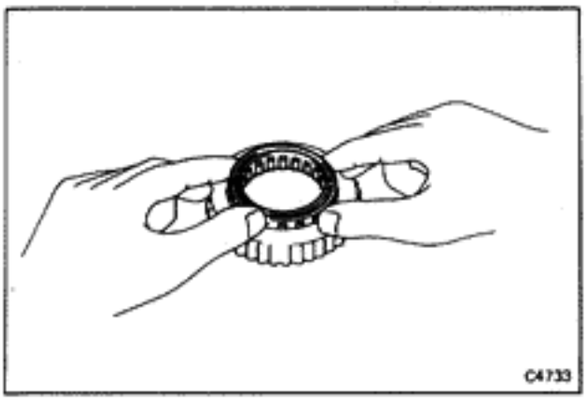

3. ASSEMBLE ONE-WAY CLUTCH

(a) Install the one-way clutch into the outer race.

(b) Install a retainer on both sides of the one-way clutch.

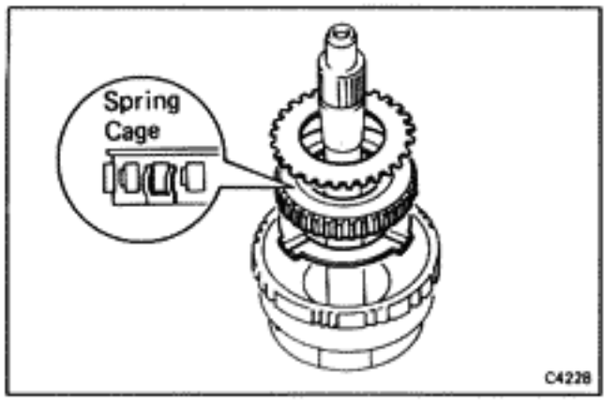

4. INSTALL THRUST WASHER AND ONE-WAY CLUTCH

(a) Install the thrust washer, facing the grooves upward.

(b) Install the one-way clutch in correct direction.

(c) Install the thrust washer.

(d) Install the snap ring.

NOTE: Be sure that the spring cage side of the one-way clutch faces toward the front of the transmission.

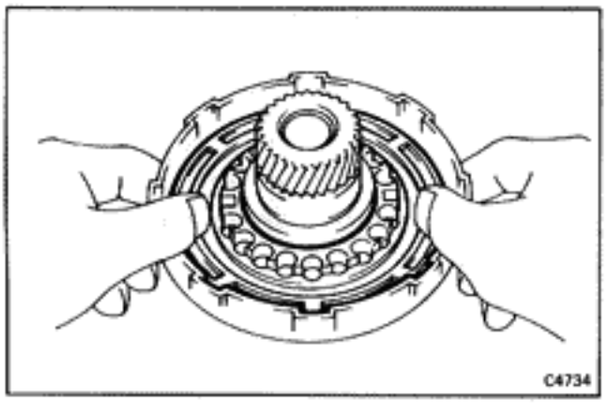

5. INSTALL CLUTCH PISTON IN OVERDRIVE CLUTCH DRUM

(a) Install new O-rings on the piston. Coat the O-rings with ATF.

(b) Press the piston into the drum with the cup side up, being careful not to damage the O-ring.

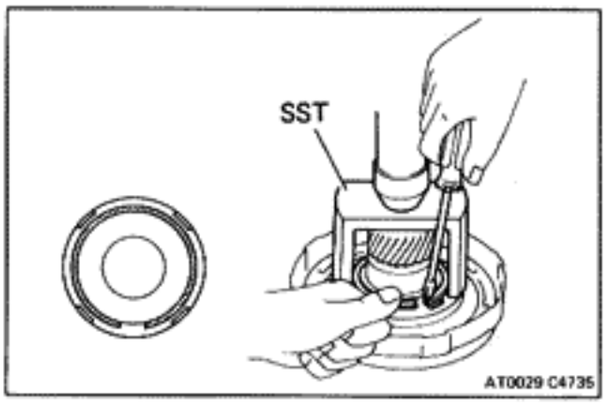

6. INSTALL EIGHTEEN PISTON RETURN SPRINGS AND SET RETAINER AND SNAP RING IN PLACE

7. COMPRESS RETURN SPRINGS AND INSTALL SNAP RING IN GROOVE

(a) Place SST on the spring retainer, and compress the springs on a shop press.

SST 09350-20013 (09369-20040)

(b) Install the snap ring with a screwdriver.

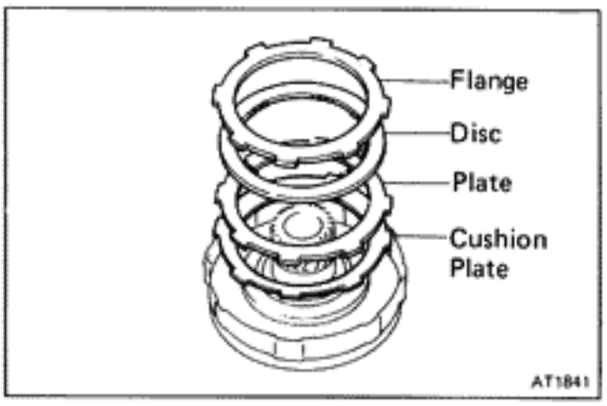

8. INSTALL CUSHION PLATE, PLATE, DISC AND FLANGE WITHOUT ASSEMBLING THINNER SNAP RING

(a) Do not assemble the thinner snap ring yet.

(b) Using low-pressure compressed air, blow all excess ATF from the disc.

CAUTION: High-pressure air will damage the disc.

Install in order: Cushion plate-plate-disc-flange (flat end down)

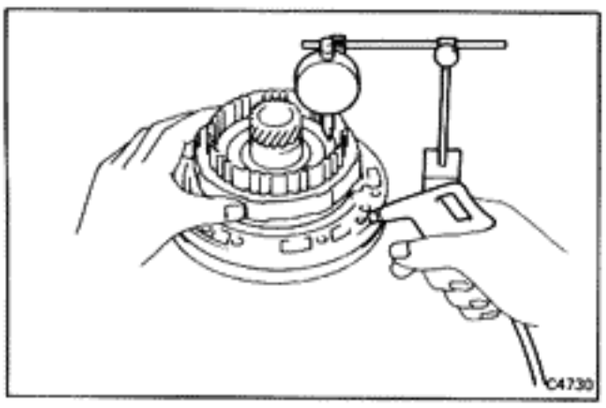

9. CHECK PISTON STROKE OF OVERDRIVE CLUTCH

(a) Install the overdrive clutch hub and outer snap ring.

(b) Install the front clutch drum onto the oil pump body. With a dial indicator, measure the stroke applying and releasing the compressed air (4 — 8 kg/cm², 57 — 114 psi or 392 — 785 kPa) as shown.

Standard piston stroke: 1.77 — 2.58 mm (0.0697 — 0.1016 in.)

If the stroke exceeds limit, the clutch pack is probably worn. If the stroke is less than the limit, parts may be misassembled or there may be excess ATF on the discs.

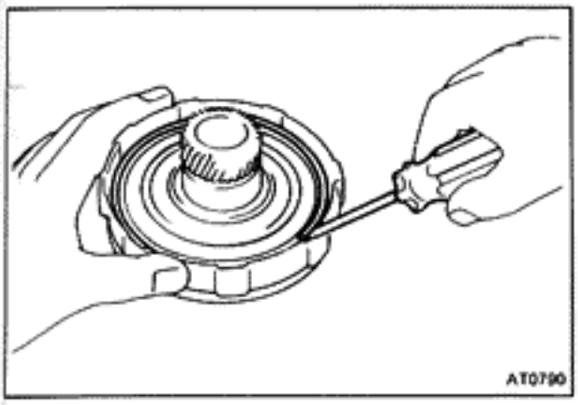

10. INSTALL THINNER SNAP RING IN OVERDRIVE CLUTCH DRUM

(a) Remove the overdrive clutch outer snap ring and hub to allow installation of the thinner snap ring.

(b) Compress and lower the snap ring into the groove by hand. Check that the ends of the snap ring are not aligned with one of the cutouts.

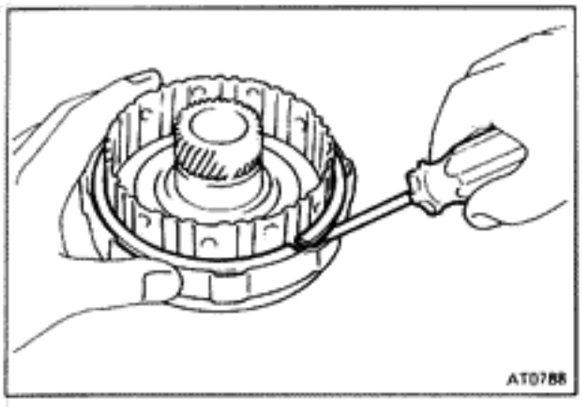

11. INSTALL HUB AND OUTER SNAP RING

Check that the ends of the snap ring are not aligned with one of the cutouts.

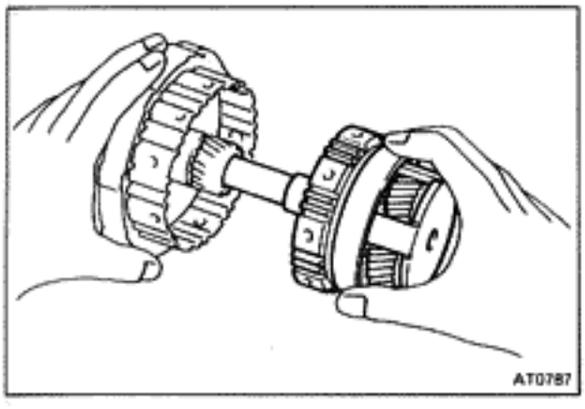

12. ASSEMBLE OVERDRIVE CLUTCH DRUM AND OVERDRIVE PLANETARY GEAR

Mesh the hub with the disc, twisting and jiggling the hub as required.

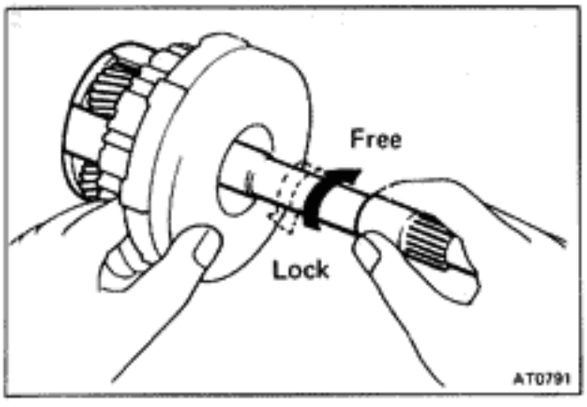

13. CHECK OPERATION OF ONE-WAY CLUTCH

Hold the clutch drum and turn the input shaft. The input shaft should turn freely clockwise and should lock counterclockwise.

14. KEEP THRUST WASHER, THRUST BEARINGS AND RACE TOGETHER

Overdrive Case and Brake

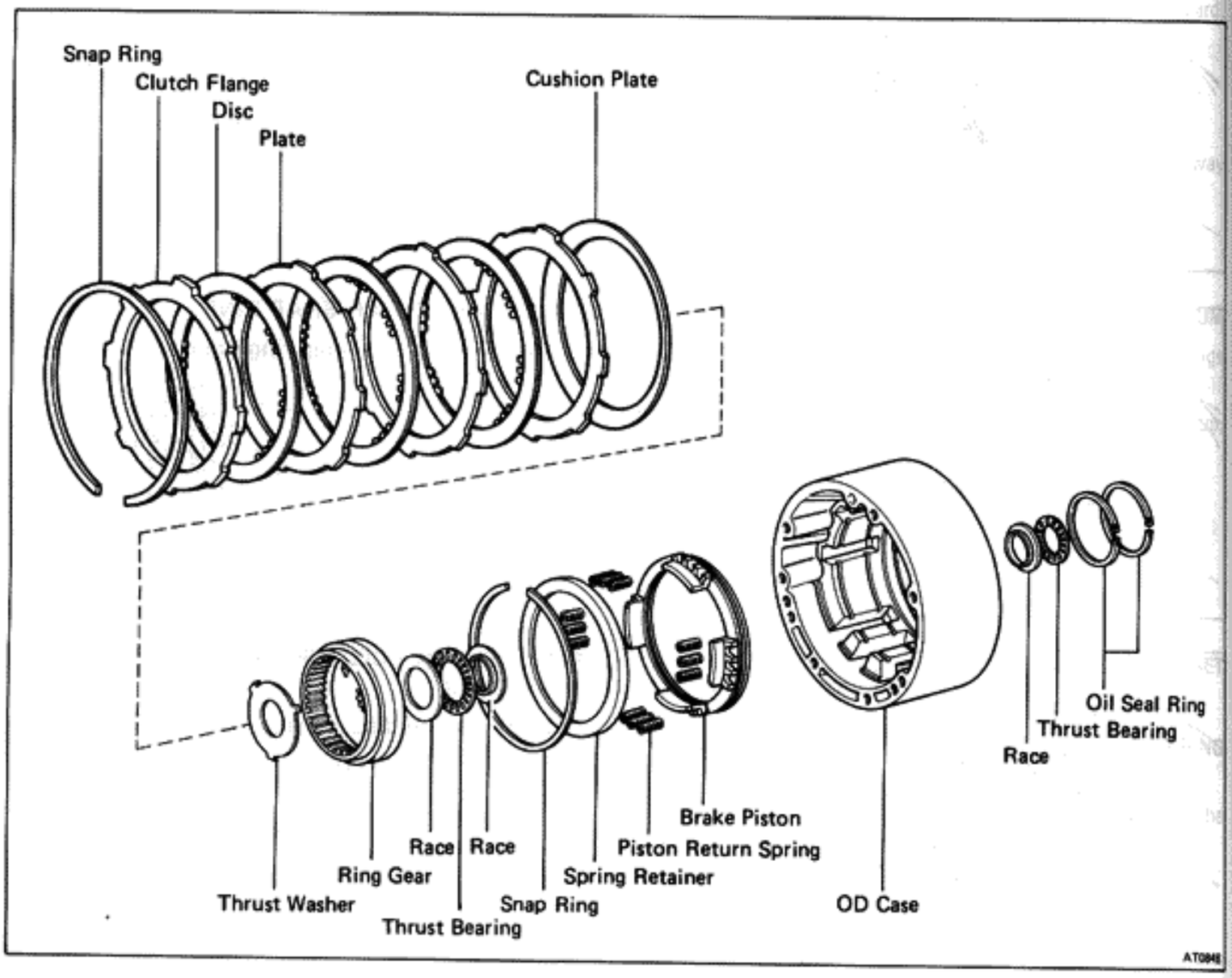

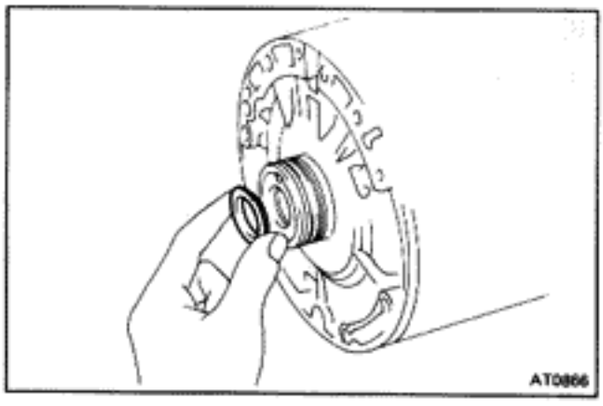

DISASSEMBLY OF OVERDRIVE CASE AND BRAKE

1. REMOVE RACE FROM OVERDRIVE

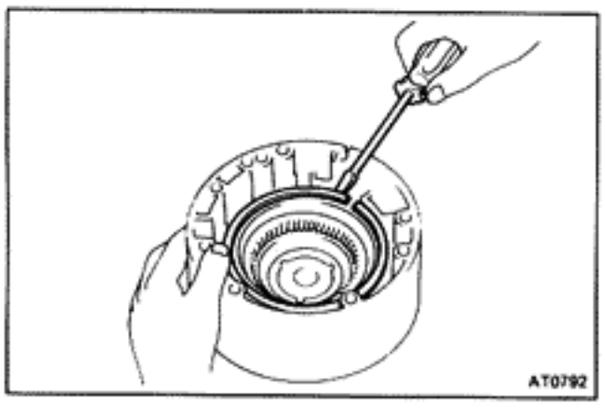

2. REMOVE OUTER SNAP RING FROM OVERDRIVE CASE
3. REMOVE CLUTCH FLANGE, DISCS PLATES AND CUSHION PLATE

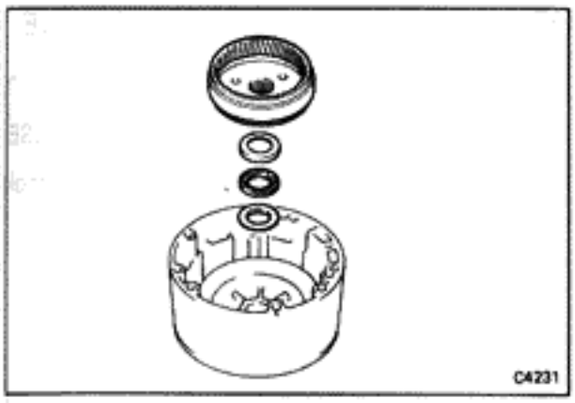

4. REMOVE RING GEAR AND THRUST WASHER

5. REMOVE THRUST BEARING AND RACES FROM OVERDRIVE CASE

Note the position of the races.

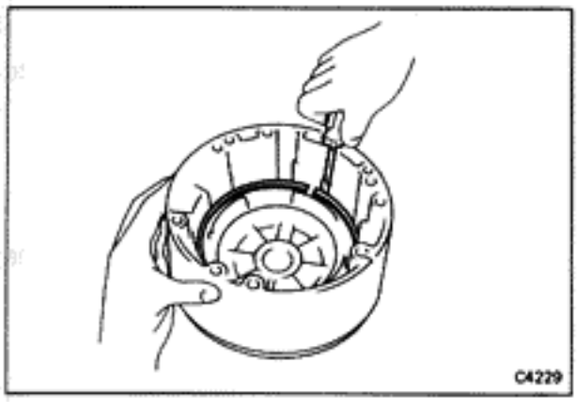

6. REMOVE SNAP RING, SPRING RETAINER AND RETURN SPRINGS

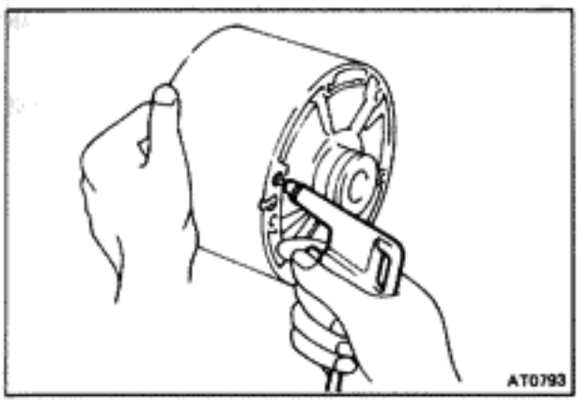

7. REMOVE BRAKE PISTON

Blow compressed air through the case hole indicated in the figure to pop out the brake piston.

If the piston does not pop out, lift it out with needle-nose pliers.

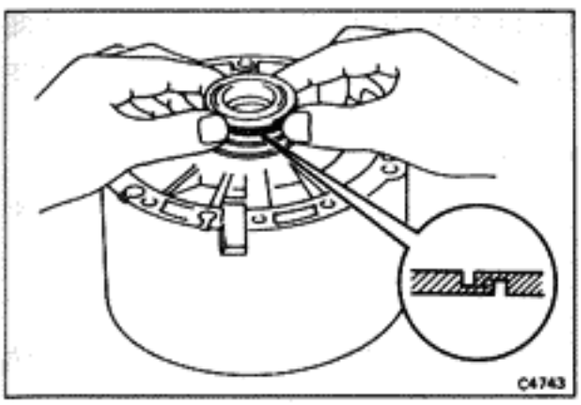

8. REMOVE TWO OIL SEAL RINGS FROM OVERDRIVE CASE

9. REMOVE O-RINGS FROM PISTON

INSPECTION OF OVERDRIVE CASE AND BRAKE

INSPECT DISC, PLATE AND FLANGE

Check that the sliding surface of disc is not worn or burnt.

If the disc is worn or burnt, replace all discs.

Then check that the sliding surfaces of plate and flange are not worn or burnt.

If necessary, replace them.

NOTE: Do not allow the discs to dry out.
Prepare new discs by soaking them at least two hours in ATF.

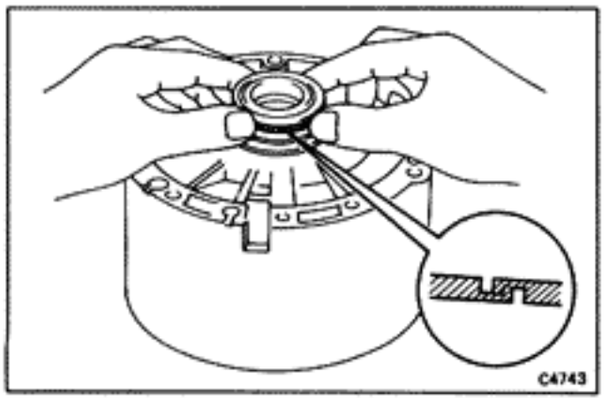

ASSEMBLY OF OVERDRIVE CASE AND BRAKE

(See page AT-60)

1. **INSTALL TWO OIL SEAL RINGS ON OVERDRIVE CASE**

   Spread the rings apart and slide them into the groove. Hook both ends by hand.

2. **INSTALL NEW O-RING ON PISTON**

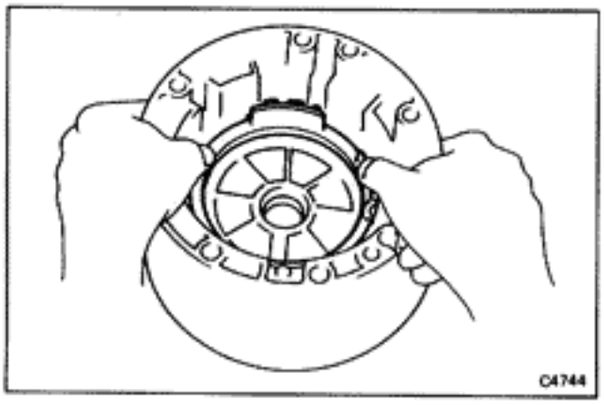

3. **INSTALL BRAKE PISTON IN OVERDRIVE CASE**

   Install the piston with cup side up, being careful not to damage the O-rings.

4. **INSTALL TWELVE RETURN SPRINGS AND SET RETAINER AND SNAP RING IN PLACE**

   Check that the ends of snap ring are not aligned with one of the cutouts.

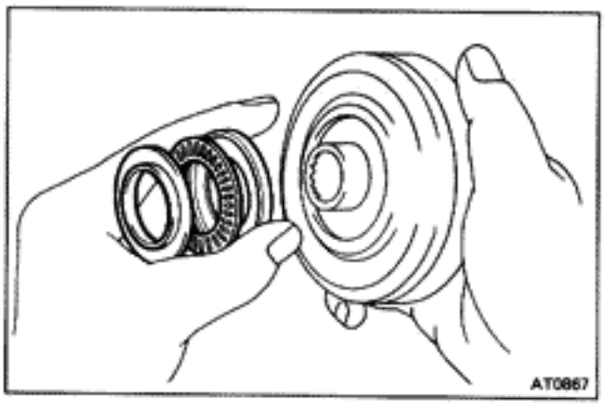

5. **INSTALL THRUST BEARING AND RACES TO RING GEAR AND SET RING GEAR IN OVERDRIVE CASE**

   NOTE: Make sure that the races are installed in correct direction.

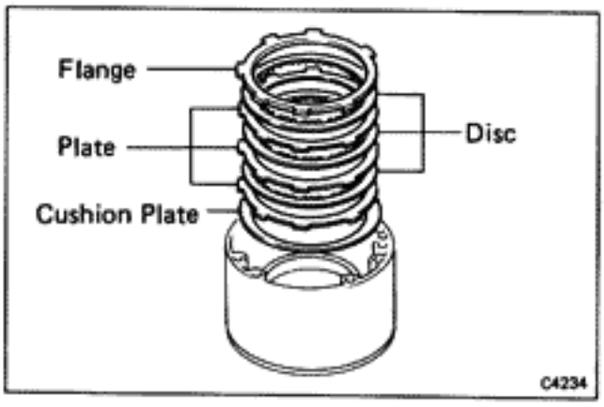

6. **INSTALL CUSHION PLATE, DISCS, PLATES AND FLANGE**

   Using low-pressure compressed air, blow all excess ATF from the discs.

   CAUTION: High-pressure air will damage the discs.

   Install in order: Cushion plate (rounded end down)-plate-disc-plate-disc-plate-disc-flange (flat side down)

7. **INSTALL SNAP RING**

   Check that the ends of the snap ring are not aligned with one of the cutouts.

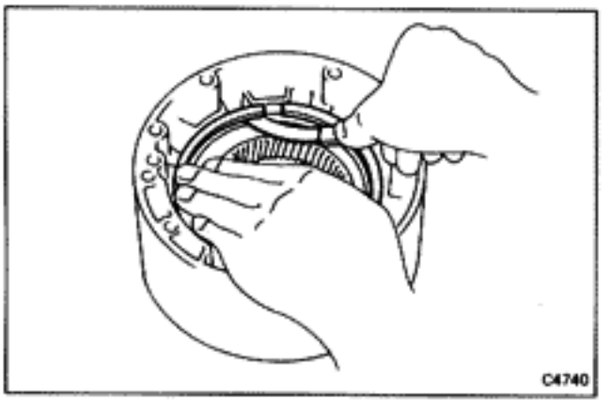

8. **MEASURE BRAKE CLEARANCE**

   Measure the distance between the snap ring and flange.

   Standard clearance: 0.40 — 1.38 mm (0.0157 — 0.0543 in.)

9. **KEEP THRUST WASHER FOR ASSEMBLY**

   The thrust washer left over will be installed later, as the transmission is assembled.

Front Clutch

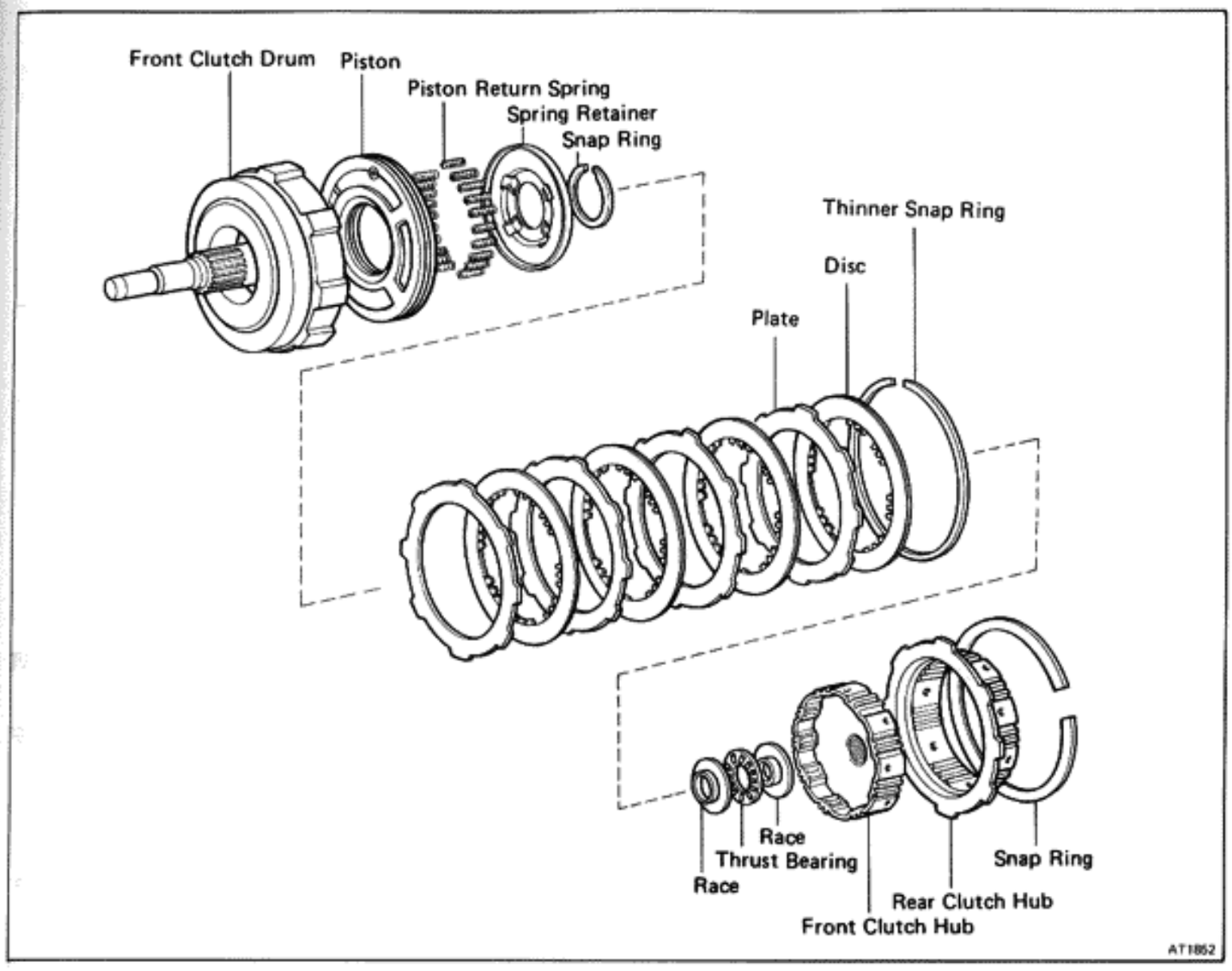

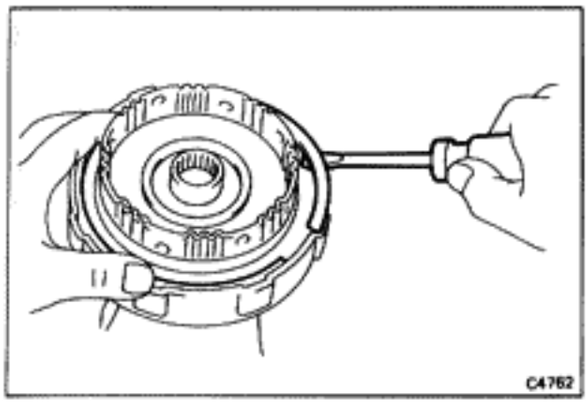

DISASSEMBLY OF FRONT CLUTCH

1. **REMOVE THRUST BEARINGS AND RACES FROM BOTH SIDES OF CLUTCH**
   Note the position of the races.
2. **USE EXTENSION HOUSING AS WORK STAND**
3. **REMOVE SNAP RING FROM FRONT CLUTCH DRUM**

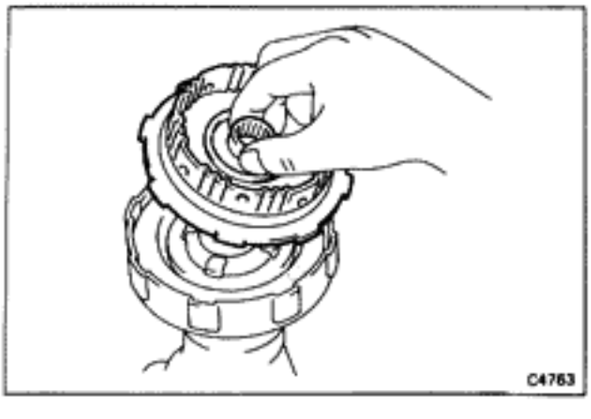

4. **REMOVE FRONT AND REAR CLUTCH HUB**
   Lift out the two clutch hubs together.

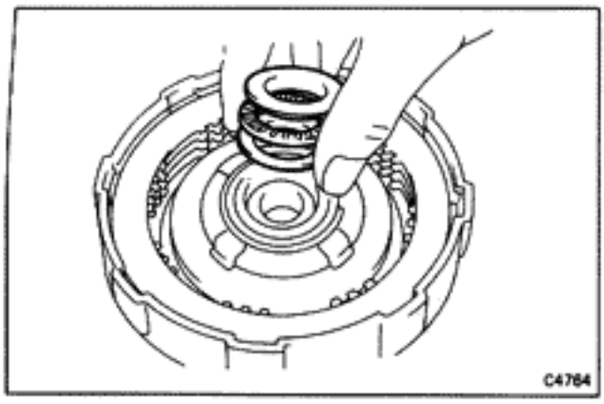

5. REMOVE THRUST BEARING AND RACES

Note the position of the races.

6. REMOVE DISC

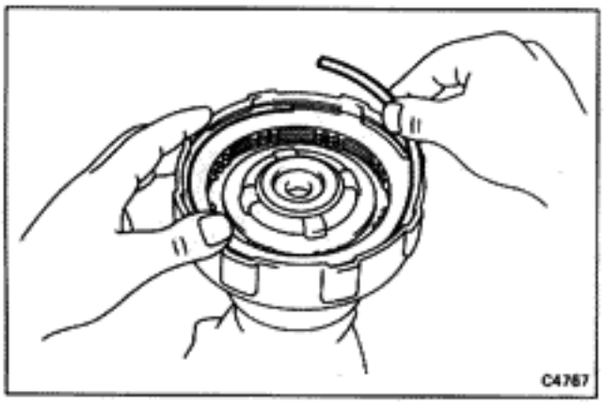

7. REMOVE THINNER SNAP RING

8. REMOVE REMAINING CLUTCH PLATES AND DISCS

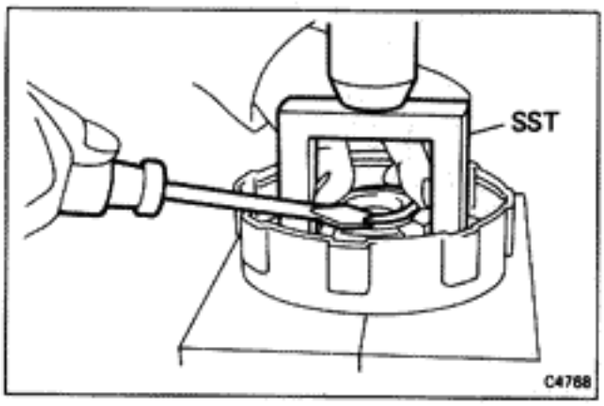

9. COMPRESS PISTON RETURN SPRINGS AND REMOVE SNAP RING

Place SST on the spring retainer and compress the springs with a shop press.
Remove the snap ring with a screwdriver.

SST 09350-20013 (09369-20040)

10. REMOVE SPRING RETAINER AND EIGHTEEN SPRINGS

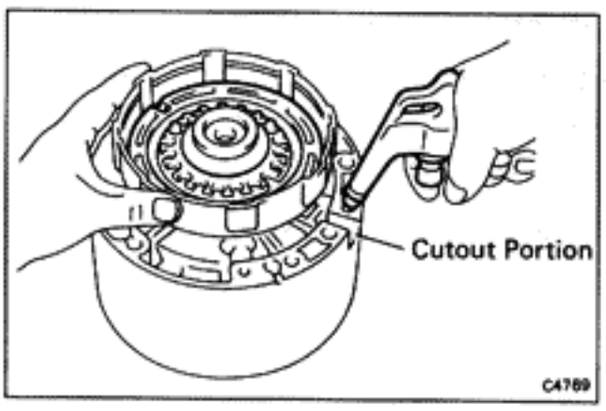

11. ASSEMBLE FRONT CLUTCH ON OVERDRIVE CASE AND BLOW OUT PISTON

(a) Slide the front clutch onto the overdrive case.

(b) Apply compressed air to the overdrive case to remove the piston. (If the piston does not come out, use pliers to remove it.)

(c) Remove the front clutch from the overdrive case.

12. REMOVE O-RINGS FROM PISTON

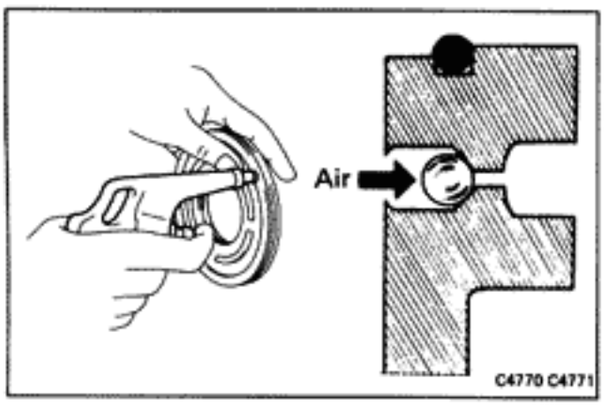

INSPECTION OF FRONT CLUTCH

1. INSPECT FRONT CLUTCH PISTON

(a) Check that the check ball is free by shaking the piston.

(b) Check that valve does not leak by applying low-pressure compressed air.

2. INSPECT DISC, PALTE AND FLANGE

Check that the sliding surface of disc is not worn or burnt.

If the disc is worn or burnt, replace all discs.

Then check that the sliding surfaces of plate and flange are not worn or burnt.

If necessary, replace them.

NOTE: Do not allow the discs to dry out.
Prepare new discs by soaking them at least two hours in ATF.

ASSEMBLY OF FRONT CLUTCH

(See page AT-63)

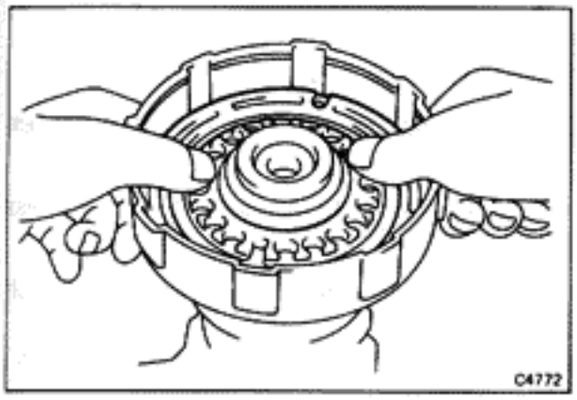

1. INSTALL NEW O-RINGS ON PISTON

2. INSTALL PISTON IN FRONT OF CLUTCH DRUM

Press the piston into the housing with the cup side up (check ball down).
Be careful not to damage the O-rings.

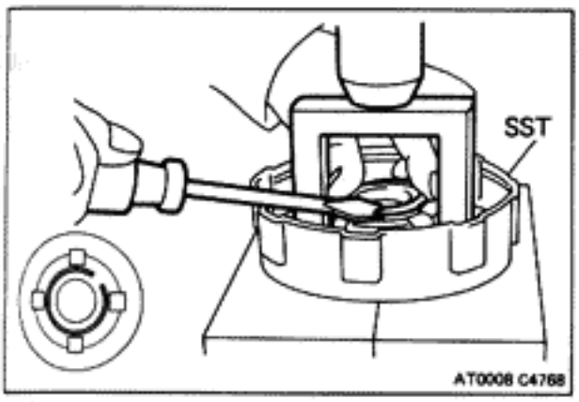

3. INSTALL TWENTY PISTON RETURN SPRINGS, SPRING RETAINER AND SNAP RING IN PLACE

4. COMPRESS RETURN SPRINGS AND INSTALL SNAP RING IN GROOVE

(a) Place SST on the spring retainer, and compress the springs with a shop press.

SST 09350-20013 (09369-20040)

(b) Install the snap ring with a screwdriver.

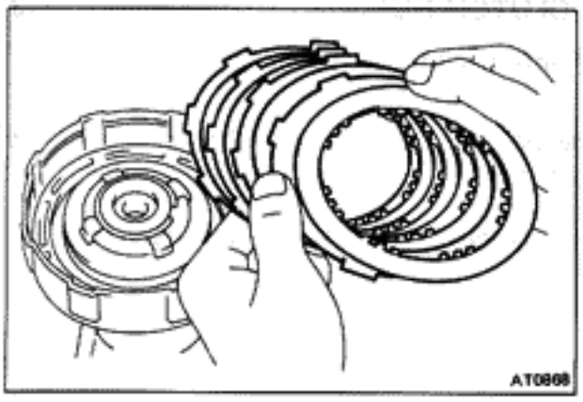

5. INSTALL DISCS AND PLATES WITHOUT ASSEMBLING THINNER SNAP RING

(a) Do not assemble the thinner snap ring yet.

(b) Using low-pressure compressed air, blow all excess ATF from the discs. For measurement of the clutch pack, install all plates and discs (temporarily without thinner snap ring).

CAUTION: High-pressure air will damage the discs.

Install in order: Plate-disc-plate-disc-plate-disc-plate (no snap ring)-disc

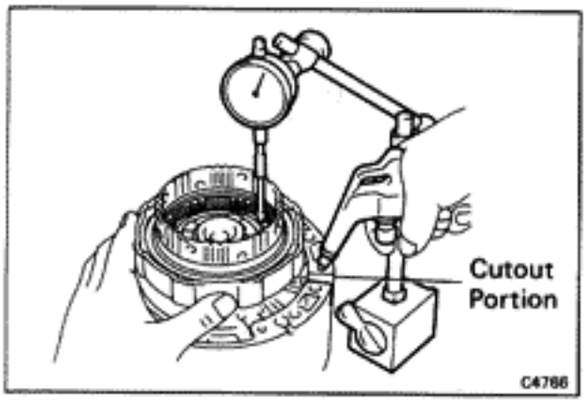

6. CHECK PISTON STROKE OF FRONT CLUTCH

(a) Install the rear clutch hub and the outer snap ring.

(b) Install the front clutch drum onto the overdrive case. With a dial indicator, measure the stroke applying and releasing the compressed air (4 — 8 kg/cm², 57 — 114 psi or 392 — 785 kPa) as shown.

Standard piston stroke: 1.40 — 2.24 mm (0.0551 — 0.0882 in.)

If not within specification, select a proper plate.

NOTE: There are two different thickness.

Plate thickness: 1.8 mm (0.071 in.)
2.0 mm (0.079 in.)

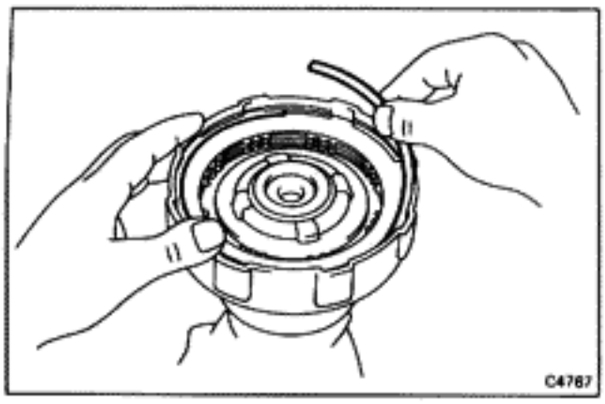

7. INSTALL THINNER SNAP RING IN CLUTCH DRUM

(a) Remove the outer snap ring, rear clutch hub and disc to allow installation of the thinner snap ring.

(b) Compress and lower the snap ring into the groove by hand. Check that the ends of the snap ring are not aligned with one of the cutouts.

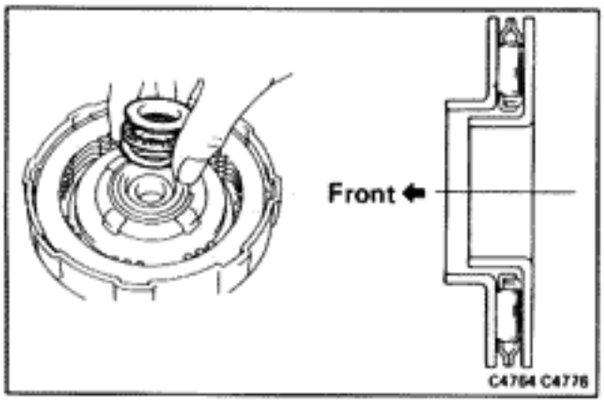

8. INSTALL DISC

9. INSTALL INNER THRUST BEARING AND RACES

IMPORTANT: Coat parts with petroleum jelly to hold them in place.

Install the inner race, needle bearing and outer race. Press them into place.

NOTE: Face the lip of race toward the front of the clutch body.

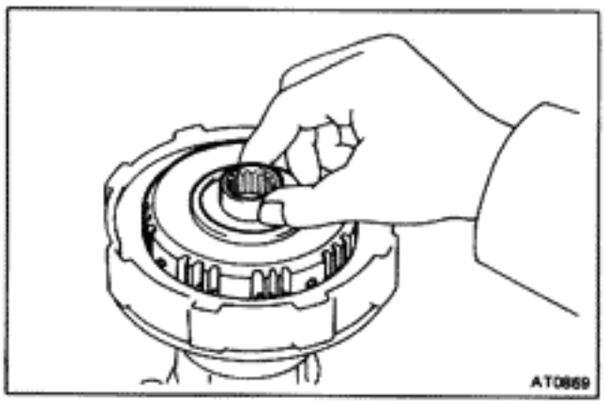

10. INSTALL FRONT CLUTCH HUB

Align the disc lugs with the hub teeth. Make sure the hub meshes with all discs and is fully inserted.

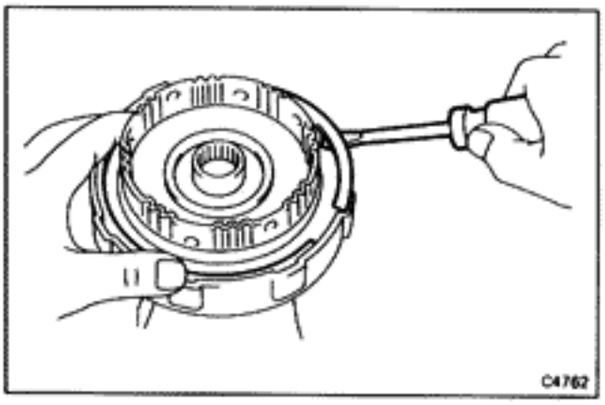

11. INSTALL REAR CLUTCH HUB AND OUTER SNAP RING

Check that the snap ring ends are not aligned with one of the cutouts.

NOTE: Note the position of the inner thrust bearing and races, and keep them together until assembly.

12. KEEP THRUST BEARINGS AND RACES TOGETHER

Rear Clutch

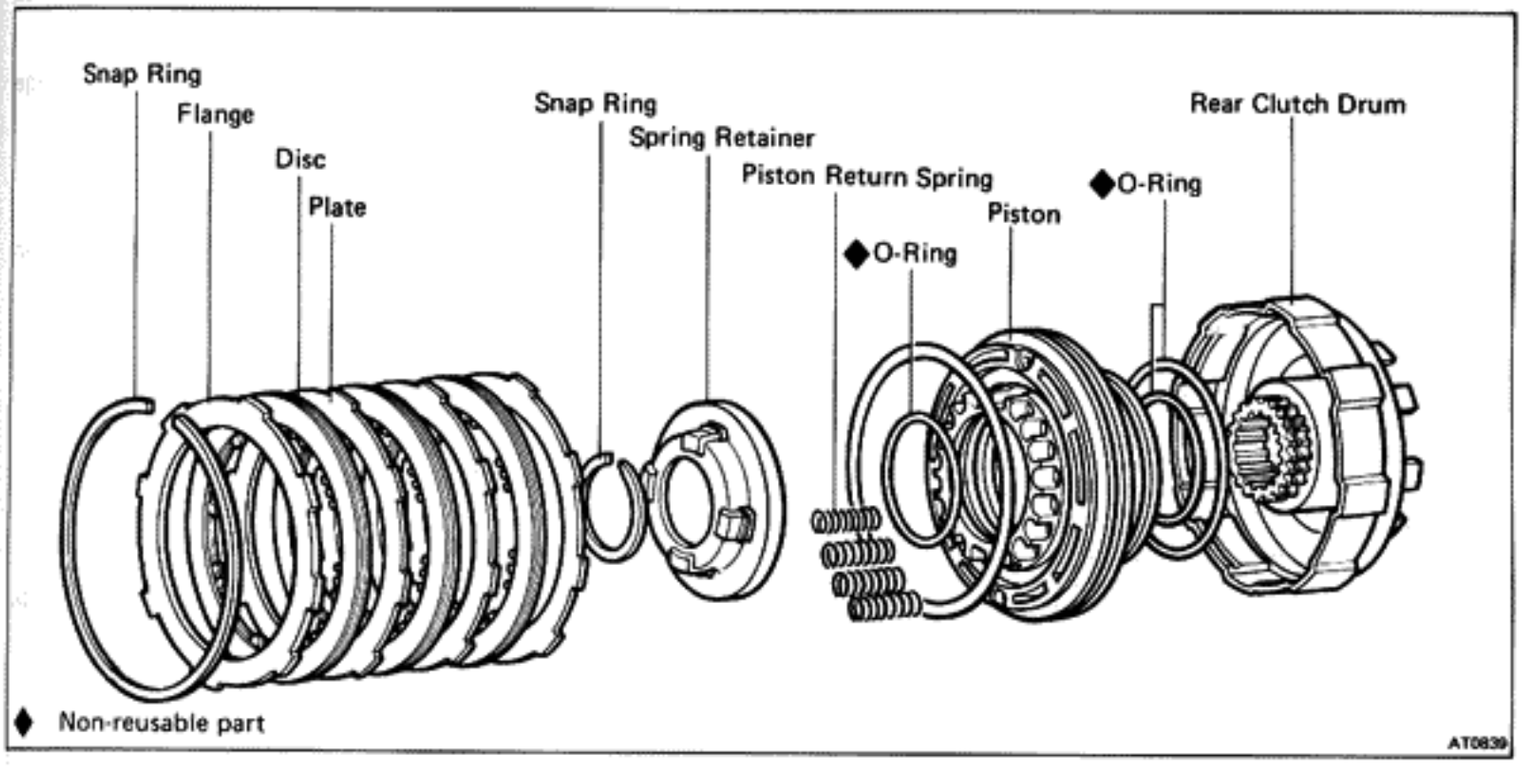

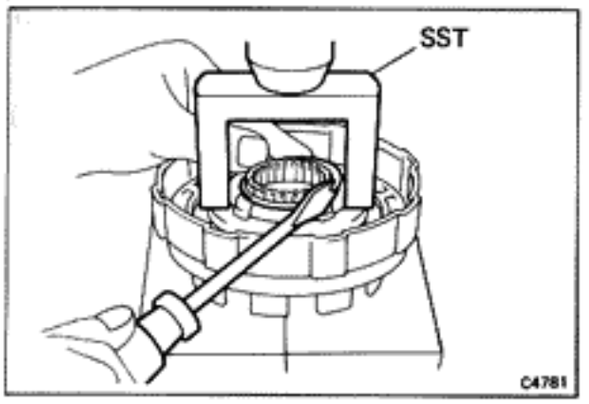

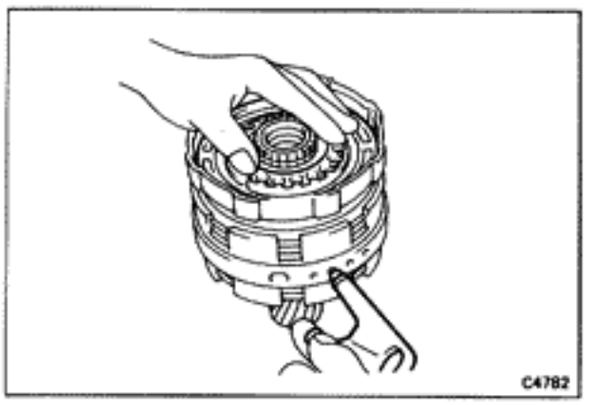

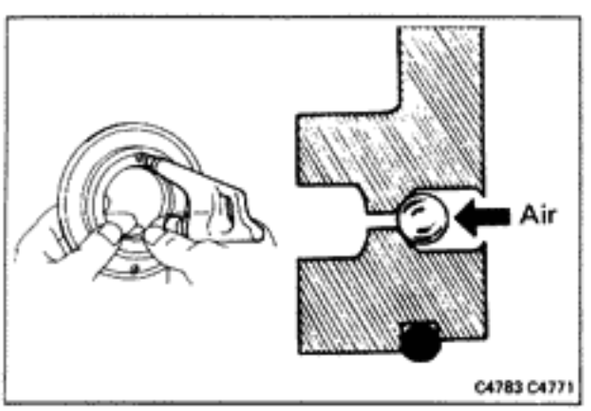

DISASSEMBLY OF REAR CLUTCH

1. **REMOVE OUTER CLUTCH PACK RETAINING SNAP RING FROM DRUM**

2. **REMOVE CLUTCH FLANGE, DISCS AND PLATES**

3. **COMPRESS PISTON RETURN SPRINGS AND REMOVE SNAP RING**

   Place SST on the spring retainer and compress the springs with a shop press.
   Using a screwdriver, remove the snap ring.

   SST 09350-20013

4. **REMOVE SPRING RETAINER, SNAP RING AND EIGHTEEN RETURN SPRINGS**

5. **ASSEMBLE REAR CLUTCH ON CENTER SUPPORT AND BLOW OUT PISTON**

   (a) Slide rear clutch onto the center support.

   (b) Apply compressed air to center support to remove the piston. (If the piston does not come out, use pliers to remove it.)

   (c) Remove the front clutch from the center support.

6. **REMOVE O-RINGS FROM REAR CLUTCH PISTON**

INSPECTION OF REAR CLUTCH

1. **INSPECT REAR CLUTCH PISTON**

   (a) Check that check ball is free by shaking each piston.

   (b) Check that the valve is not leaking by applying low-pressure compressed air.

2. INSPECT DISC, PLATE AND FLANGE

Check that the sliding surface of disc is not worn or burnt.

If the disc is worn or burnt, replace all discs.

Then check that the sliding surfaces of plate and flange are not worn or burnt.

If necessary, replace them.

NOTE: Do not allow the discs to dry out.
Prepare new discs by soaking them at least two hours in ATF.

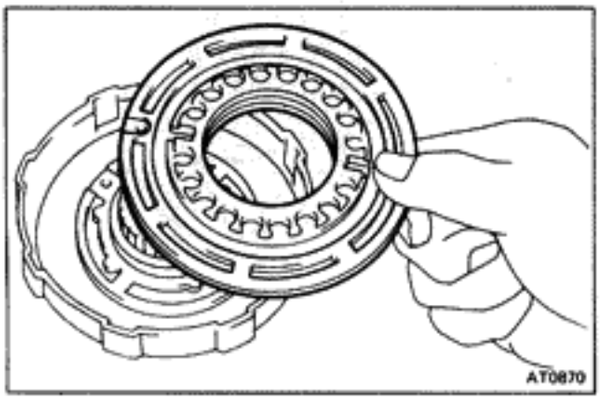

ASSEMBLY OF REAR CLUTCH

(See page AT-67)

1. INSTALL NEW O-RINGS ON PISTON

2. INSTALL REAR CLUTCH PISTON IN DRUM

Press rear clutch piston into drum with the cup side up, being careful not to damage the O-rings.

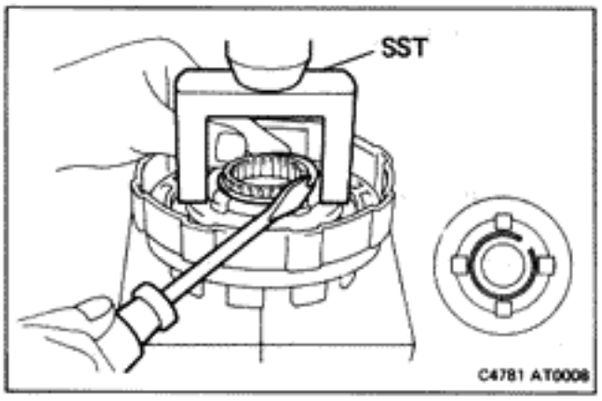

3. INSTALL EIGHTEEN PISTON RETURN SPRINGS AND SET RETAINER WITH SNAP RING IN PLACE

4. COMPRESS RETURN SPRINGS AND INSTALL SNAP RING IN GROOVE

(a) Place SST on the spring retainer, and compress the springs on shop press.

SST 09350-20013 (09369-20040)

(b) Install the snap ring with snap ring pliers.

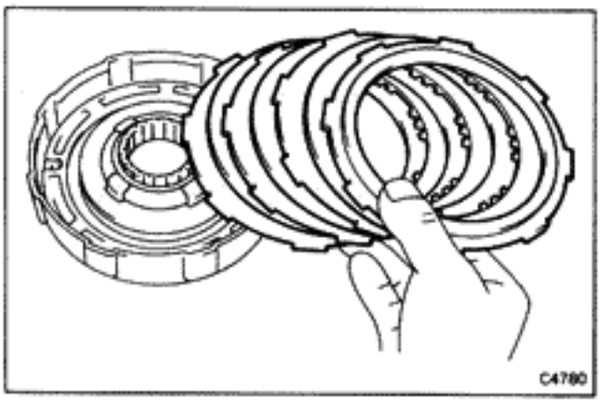

5. INSTALL DISCS, PLATES AND FLANGE

Using low-pressure compressed air, blow all excess ATF from discs.

CAUTION: High-pressure air will damage the discs.

Install in order: Plate-disc-plate-disc-plate-disc-flange (flat end down)

6. INSTALL SNAP RING

Check that the snap ring ends are not aligned with one of the cutouts.

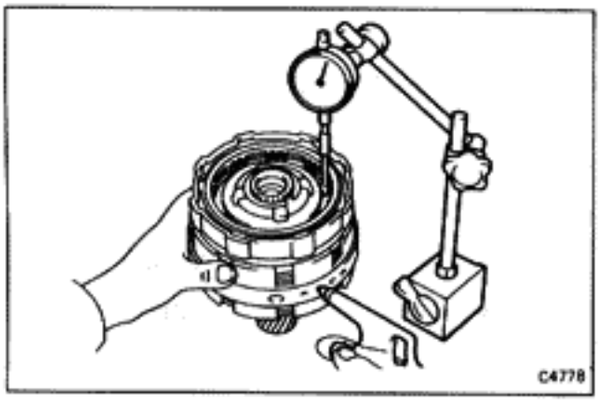

7. CHECK PISTON STROKE OF REAR CLUTCH

Install the rear clutch onto the center support. With a dial indicator, measure the stroke applying and releasing the compressed air (4 — 8 kg/cm², 57 — 114 psi or 392 — 785 kPa) as shown.

Standard piston stroke: 0.90 — 1.75 mm (0.0354 — 0.0689 in.)

If not within specification, select a proper flange. There are three different thickness.

Flange thickness: 3.6 mm, 3.8 mm, 4.0 mm (0.142 in., 0.150 in., 0.157 in.)

Center Support Assembly

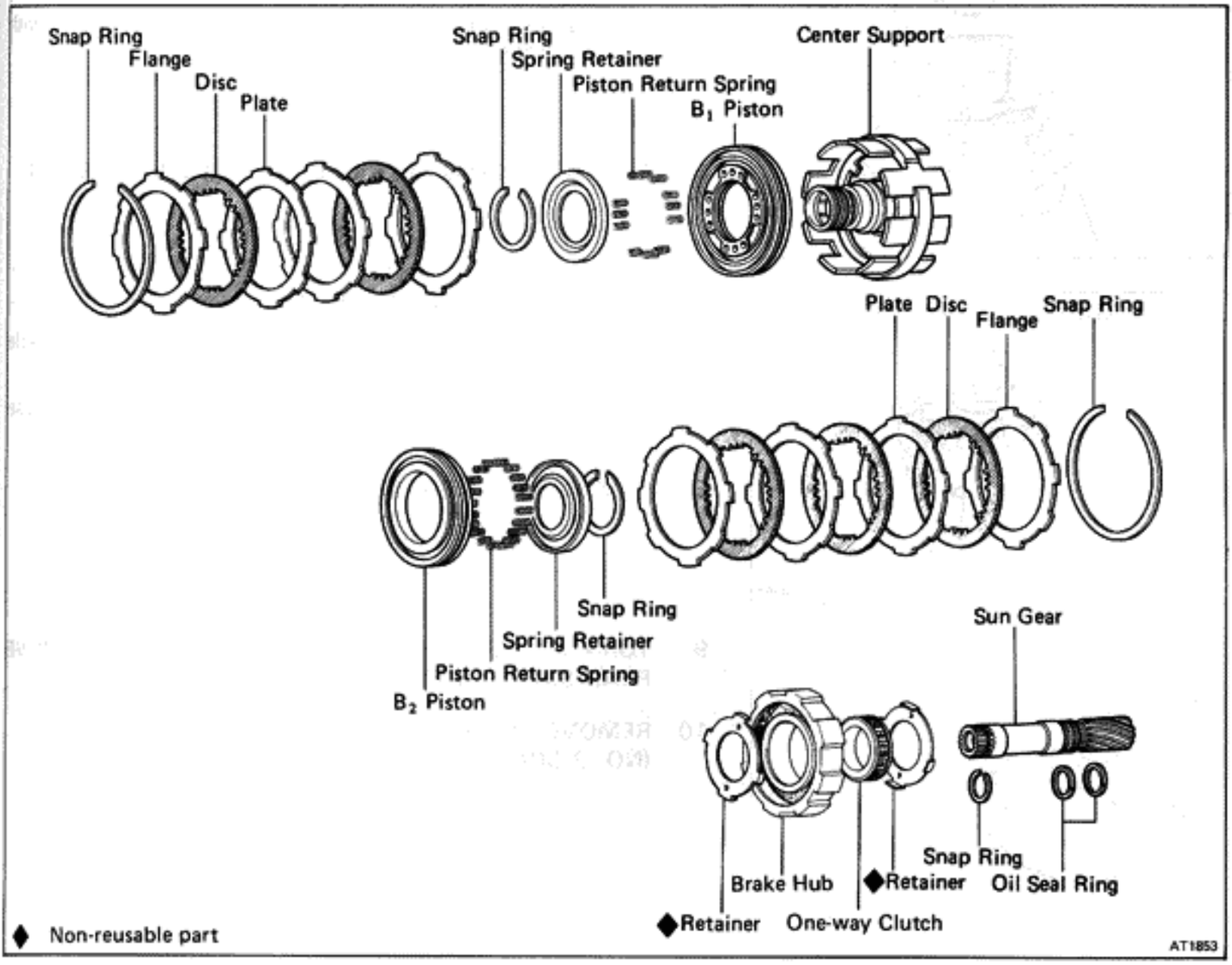

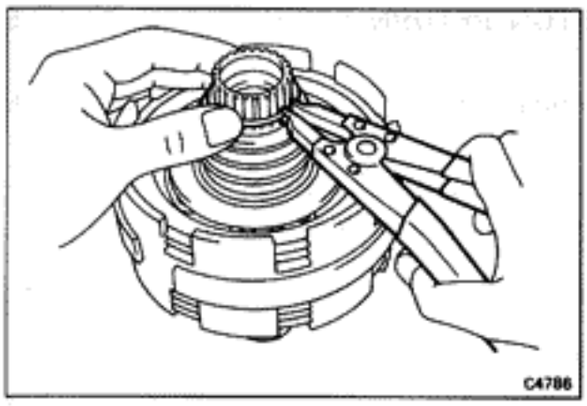

DISASSEMBLY OF CENTER SUPPORT ASSEMBLY

1. REMOVE SNAP RING FROM END OF SUN GEAR SHAFT
2. PULL CENTER SUPPORT ASSEMBLY FROM SHAFT

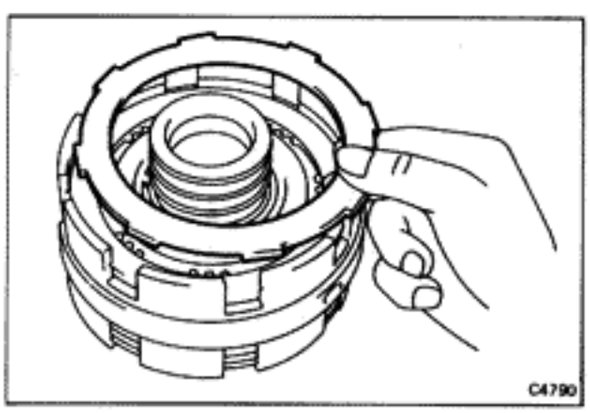

3. REMOVE SNAP RING FROM FRONT OF CENTER SUPPORT ASSEMBLY (NO. 1 BRAKE)
4. REMOVE CLUTCH FLANGE, DISCS AND PLATES (NO. 1 BRAKE)

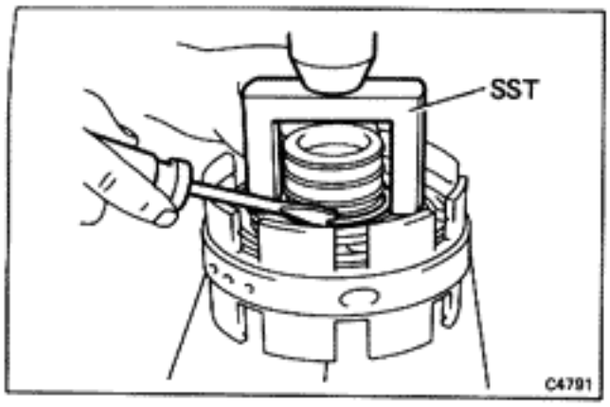

5. COMPRESS PISTON RETURN SPRINGS AND REMOVE SNAP RING

Place SST on spring retainer and compress the springs with a shop press.
Using a screwdriver, remove the snap ring.
SST 09350-20013 (09369-20040)

6. REMOVE SPRING RETAINER AND TWELVE SPRINGS

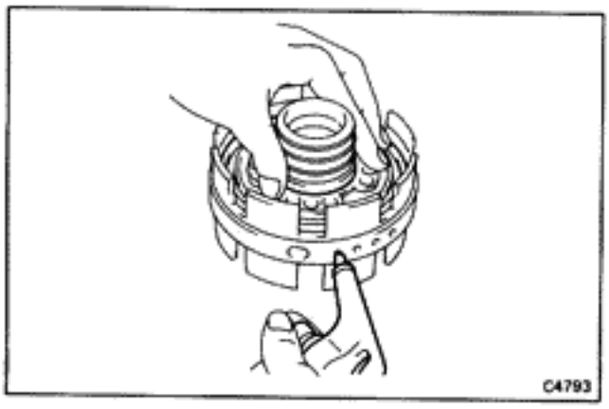

7. REMOVE NO. 1 BRAKE PISTON

Blow compressed air through the center support oil hole to remove the No. 1 brake piston.

If the piston does not pop out, lift it out with needle-nose pliers.

8. REMOVE NO. 1 BRAKE PISTON O-RINGS

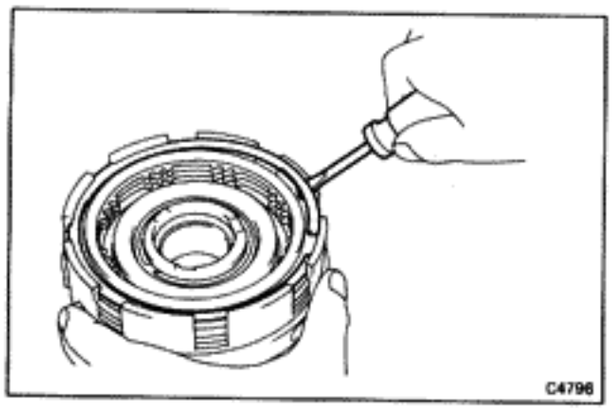

9. TURN CENTER SUPPORT ASSEMBLY OVER AND REMOVE REAR SNAP RING (NO. 2 BRAKE)

10. REMOVE CLUTCH FLANGE, DISCS AND PLATES (NO. 2 BRAKE)

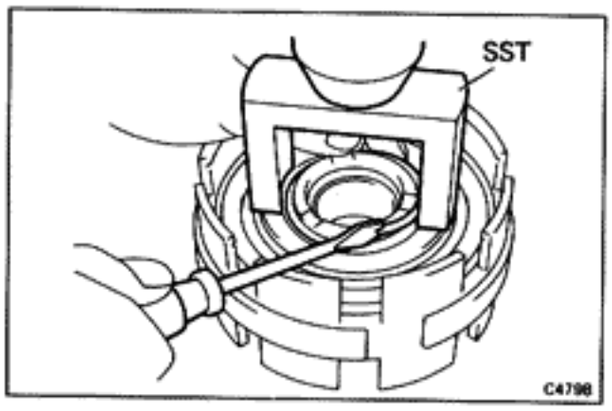

11. COMPRESS PISTON RETURN SPRINGS AND REMOVE SNAP RING

Place SST on spring retainer and compress the springs with a shop press.

Using a screwdriver, remove the snap ring.

SST 09350-20013 (09369-20040)

12. REMOVE SPRING RETAINER AND TWENTY SPRINGS

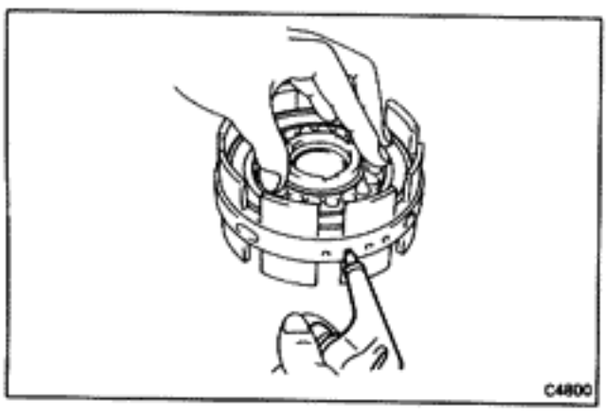

13. REMOVE NO. 2 BRAKE PISTON

Blow compressed air through the center support oil hole to remove the No. 2 brake piston.

If the piston does not pop out, lift it out with needle-nose pliers.

14. REMOVE NO. 2 BRAKE PISTON O-RINGS

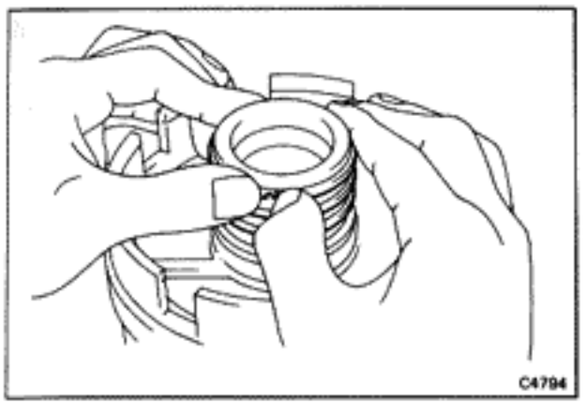

15. REMOVE THREE OIL SEAL RINGS FROM CENTER SUPPORT

CAUTION: Do not spread the ring ends too much.

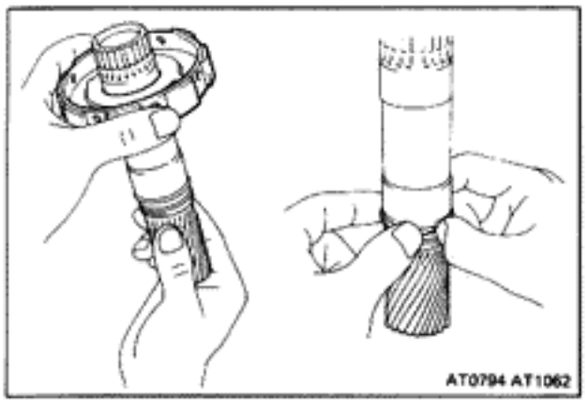

16. REMOVE ONE-WAY CLUTCH ASSEMBLY AND OIL SEAL RINGS FROM SUN GEAR

INSPECTION OF CENTER SUPPORT ASSEMBLY

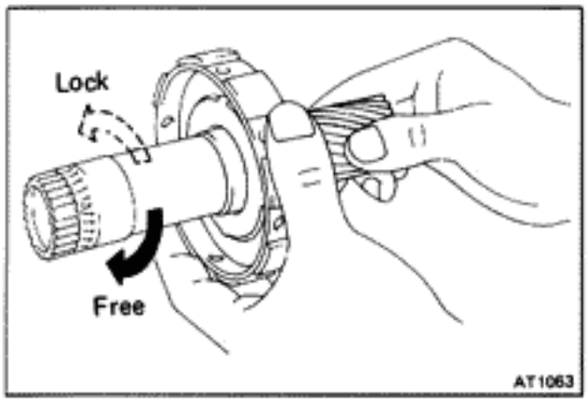

1. CHECK OPERATION OF ONE-WAY CLUTCH

Hold the No. 2 brake hub and turn the sun gear. The sun gear should turn freely counterclockwise and should lock clockwise.

If the one-way clutch does not work properly, replace it.

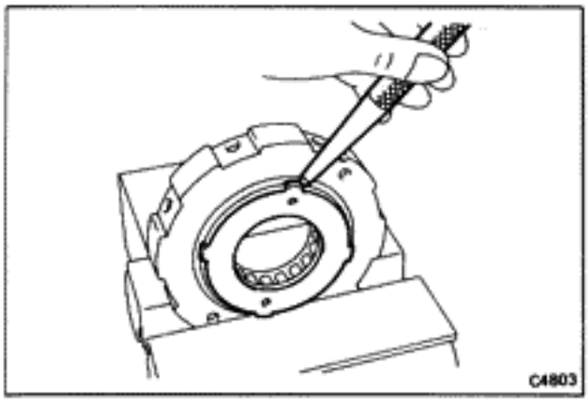

2. IF NECESSARY, REPLACE ONE-WAY CLUTCH

(a) Bend several tabs back with a tapered punch.

(b) Pry off the retainer with a screwdriver. Leave the other retainer on the hub.

(c) Remove the one-way clutch.

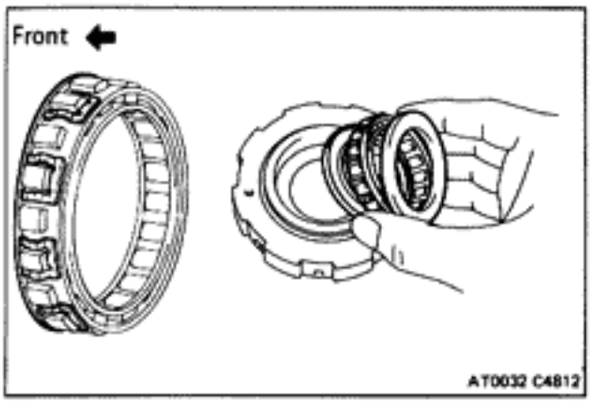

(d) Install the one-way clutch into the brake hub, facing the spring cage toward the front.

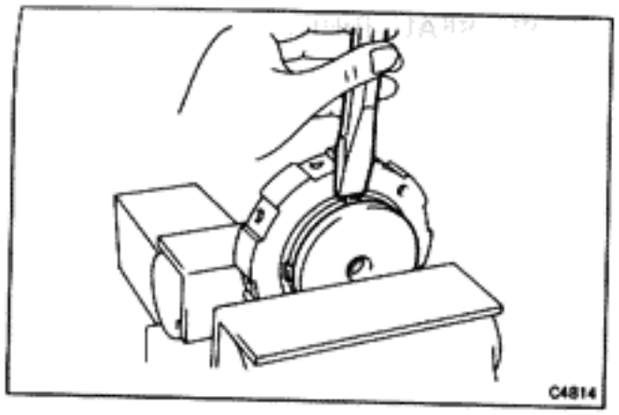

(e) Hold the brake hub in a vise with soft jaws, and flat-
ten the ears with a chisel.

(f) Check to make sure that the retainer is centered.

3. INSPECT DISC, PLATE AND FLANGE

Check that the sliding surface of disc is not worn or burnt.

If the disc is worn or burnt, replace all discs.

Then check that the sliding surfaces of plate and flange are not worn or burnt.

If necessary, replace them.

NOTE: Do not allow the discs to dry out.
Prepare new discs by soaking them at least two hours in ATF.

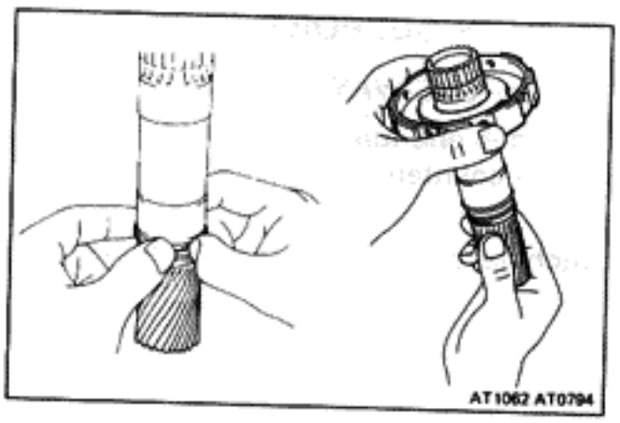

ASSEMBLY OF CENTER SUPPORT ASSEMBLY

(See page AT-69)

1. INSTALL TWO OIL SEAL RINGS AND ONE-WAY CLUTCH ASSEMBLY ON SUN GEAR

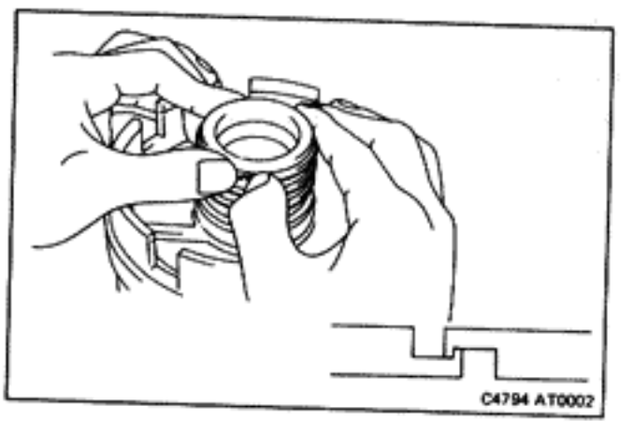

2. INSTALL THREE OIL SEAL RINGS ON CENTER SUPPORT

Spread the rings apart and slip them into the groove. Hook both ends by hand.

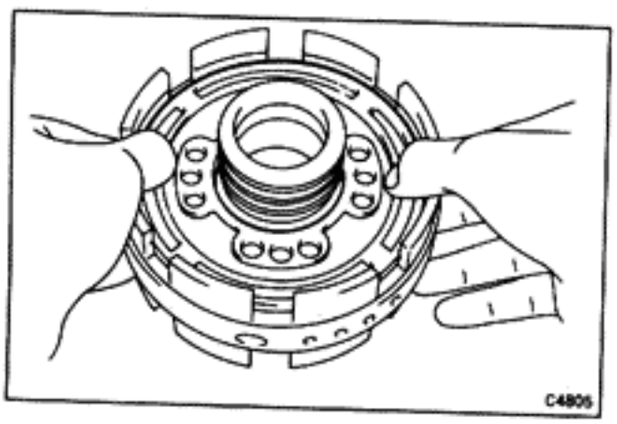

3. INSTALL NEW O-RINGS ON PISTON

4. INSTALL NO. 1 BRAKE PISTON IN CENTER SUPPORT

Press the No. 1 brake piston into the center support with the cup side up, being careful not to damage the O-rings.

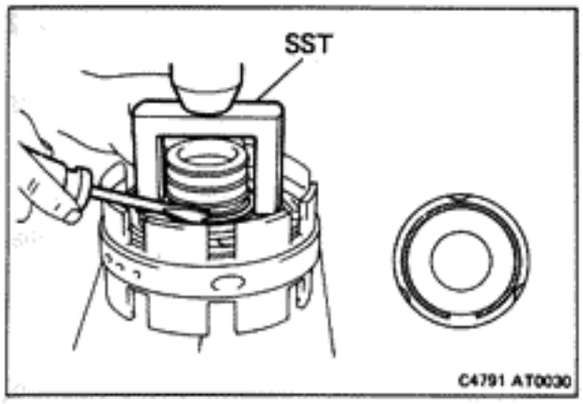

5. INSTALL TWELVE PISTON RETURN SPRINGS AND SET RETAINER WITH SNAP RING IN PLACE

6. COMPRESS RETURN SPRINGS AND INSTALL SNAP RING IN GROOVE

(a) Place SST on the spring retainer, and compress the springs on a shop press.

SST 09350-20013 (09369-20040)

(b) Install the snap ring using a screwdriver.

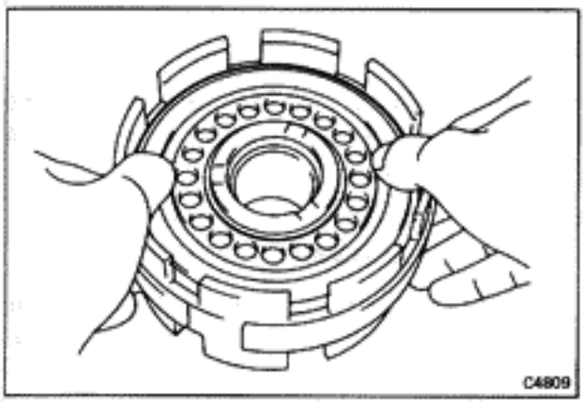

7. INSTALL NEW O-RINGS ON PISTON AND CENTER SUPPORT

8. TURN CENTER SUPPORT OVER AND INSTALL NO. 2 BRAKE PISTON

Press the No. 2 brake piston into the center support with the cup side up, being careful not to damage the O-rings.

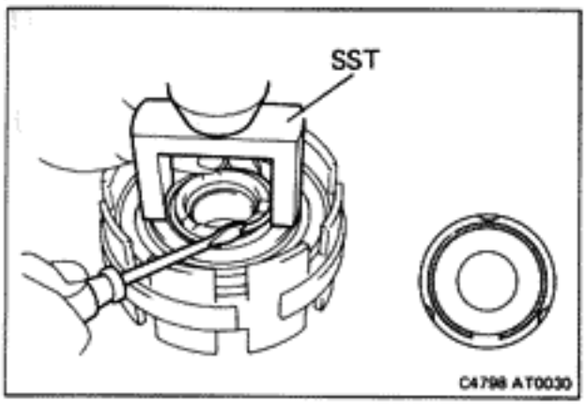

9. INSTALL TWENTY PISTON RETURN SPRINGS AND SET RETAINER WITH SNAP RING IN PLACE

10. COMPRESS RETURN SPRINGS AND INSTALL SNAP RING IN GROOVE

(a) Place SST on the spring retainer, and compress the springs on a shop press.

SST 09350-20013 (09369-20040)

(b) Install the snap ring with a screwdriver.

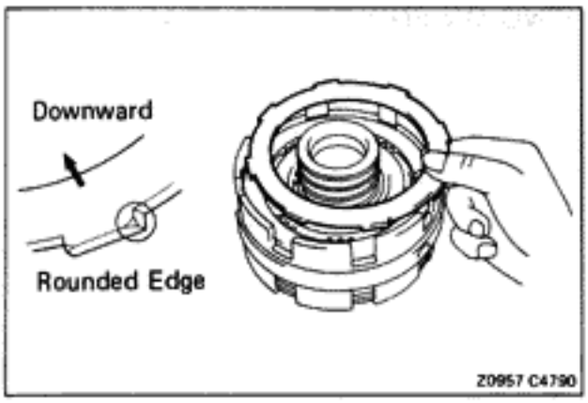

11. TURN CENTER SUPPORT OVER AND INSTALL NO. 1 BRAKE PISTON PLATE, DISC AND FLANGE

Using the low-pressure compressed air, blow all excess ATF from the disc.

CAUTION: High-pressure air will damage the disc.

Install in order: Plate-disc-plate-plate-disc-flange (rounded edge down)

12. INSTALL SNAP RING IN CENTER SUPPORT

Check that snap ring ends are not aligned with one of the cutouts.

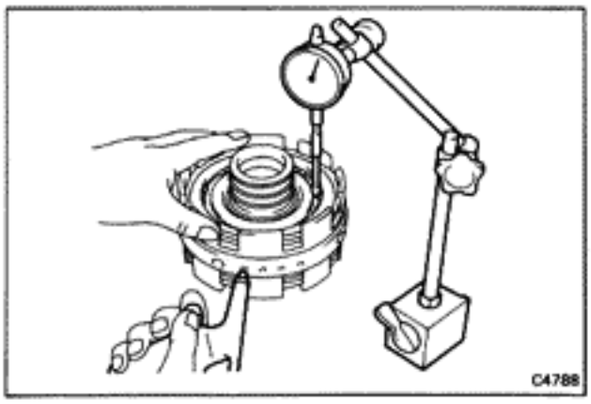

13. CHECK PISTON STROKE OF NO. 1 BRAKE

With a dial indicator, measure the stroke applying and releasing the compressed air (4 — 8 kg/cm², 57 — 114 psi or 392 — 785 kPa) as shown.

Standard piston stroke: 0.80 — 1.73 mm (0.0315 — 0.0681 in.)

If the stroke exceeds the limit, the clutch pack is probably worn. If the stroke is less than the limit, parts may be mis-assembled or there may be excess ATF on the discs.

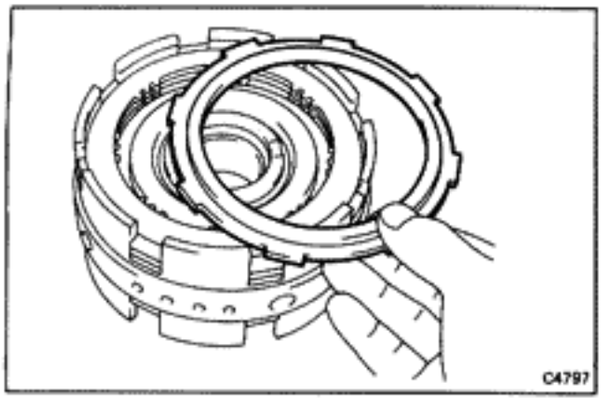

14. TURN CENTER SUPPORT OVER AND INSTALL NO. 2 BRAKE PLATES, DISCS AND FLANGE

Using the low-pressure compressed air, blow all excess ATF from the discs.

CAUTION: High-pressure air will damage the disc.

Install in order: Plate-disc-plate-disc-plate-disc-flange (flat side down)

15. INSTALL SNAP RING IN CENTER SUPPORT

Check that the snap ring ends are not aligned with one of the cutouts.

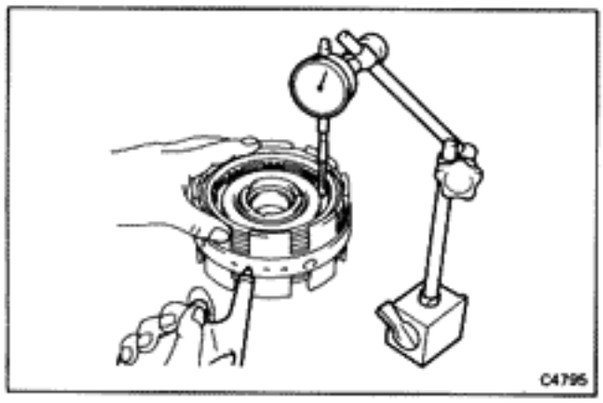

16. CHECK PISTON STROKE OF NO. 2 BRAKE

With a dial indicator, measure the stroke applying and releasing the compressed air (4 — 8 kg/cm², 57 — 114 psi or 392 — 785 kPa) as shown.

Standard piston stroke: 1.01 — 2.25 mm (0.0398 — 0.0886 in.)

If the stroke exceeds the limit, the clutch pack is probably worn. If the stroke is less than the limit, parts may be misassembled or there may be excess ATF on the discs.

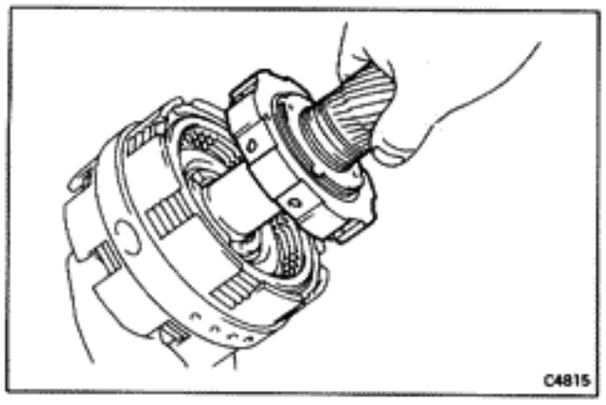

17. ASSEMBLE CENTER SUPPORT AND SUN GEAR SHAFT

(a) Align the brake No. 2 disc flukes.

(b) Mesh the brake hub with the discs, twisting and jiggling the hub as required.

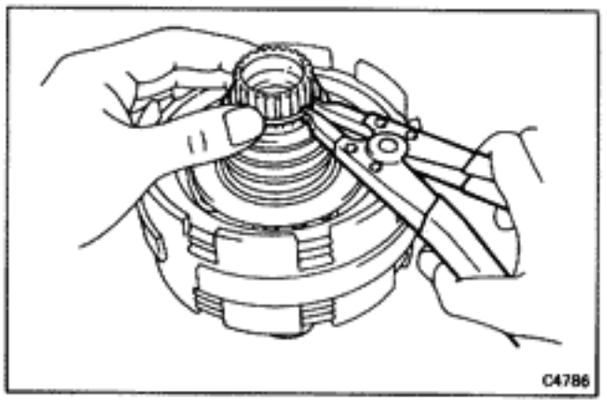

18. INSTALL SNAP RING ON END OF SUN GEAR SHAFT

Planetary Gear Output Shaft

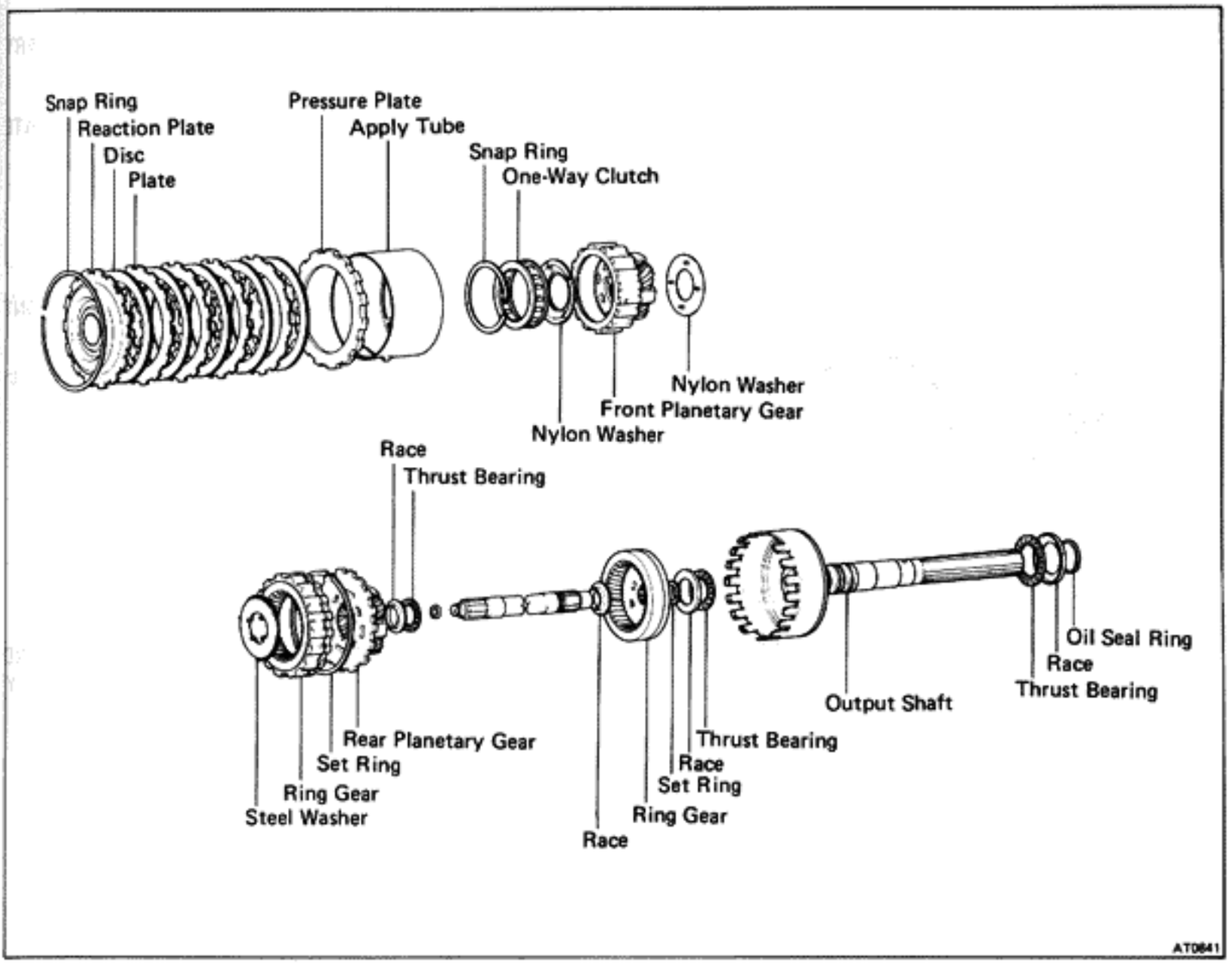

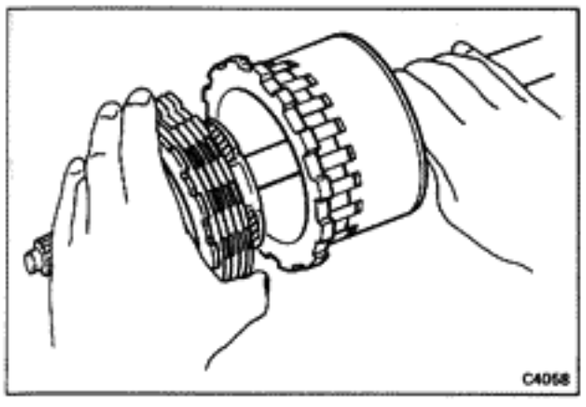

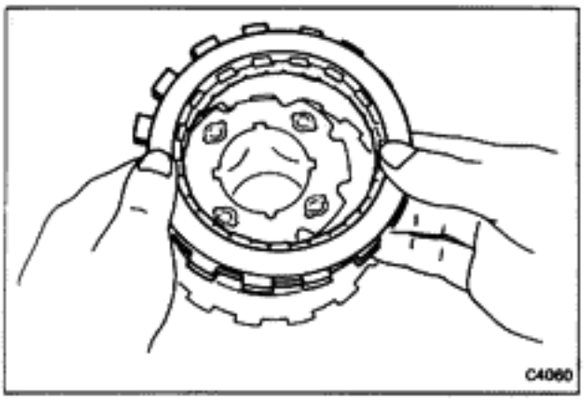

DISASSEMBLY OF PLANETARY GEAR OUTPUT SHAFT

1. **REMOVE NO. 3 BRAKE DISC/PLATE PACK AND FRONT PLANETARY PINION GEARS**

   Grasp the components and pull off the front end of the output shaft.
   Be careful to avoid dropping the bearing on the output shaft.

2. **REMOVE THRUST WASHER FROM PLANETARY GEARS**

   NOTE: The thrust washer may have stuck to the inside of the planetary gear case.

3. **REMOVE BRAKE DISCS AND PLATES FROM PLANETARY GEARS**

4. **REMOVE REACTION PLATE FROM PLANETARY GEARS**

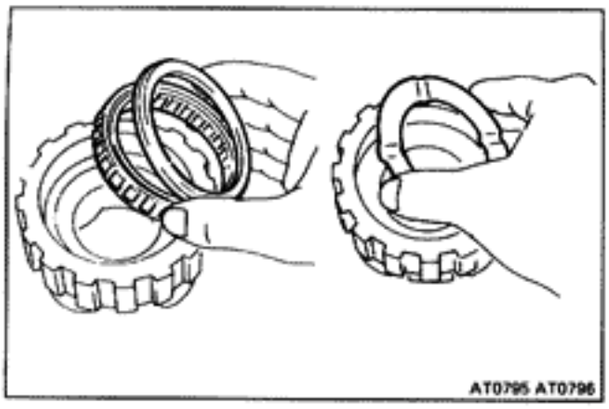

5. **REMOVE SNAP RING AND ONE-WAY CLUTCH FROM PLANETARY GEARS**

6. **REMOVE NYLON THRUST WASHER FROM PLANETARY GEARS**

7. **REMOVE APPLY TUBE AND CLUTCH PRESSURE PLATE**

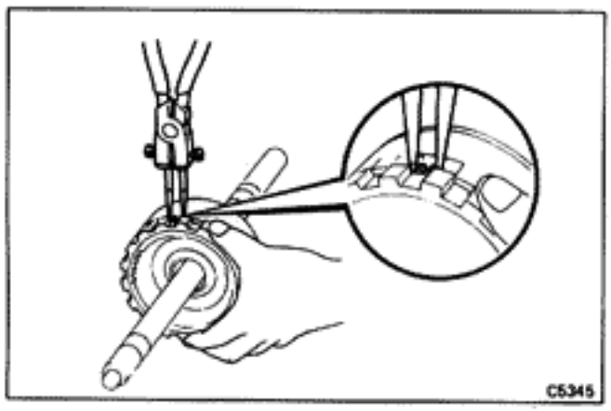

8. **COMPRESS SHAFT SNAP RING AND REMOVE FRONT PLANETARY RING GEAR**

While pulling up the ring gear, compress the snap ring with snap ring pliers and pull out the ring gear by hand.

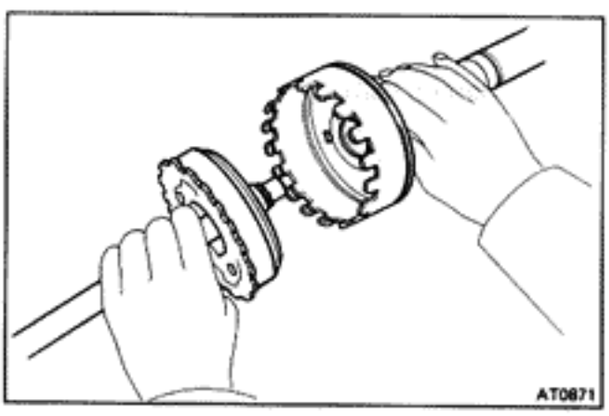

9. **REMOVE INTERMEDIATE SHAFT, RING GEAR AND PLANETARY GEAR FROM OUTPUT SHAFT ASSEMBLY**

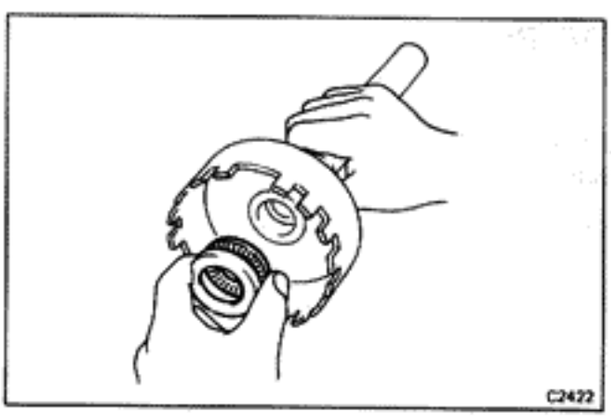

10. **REMOVE THRUST BEARING AND RACES FROM OUTPUT SHAFT ASSEMBLY**

Note the position of the races.

11. **REMOVE THREE OIL SEAL RINGS FROM OUTPUT SHAFT**

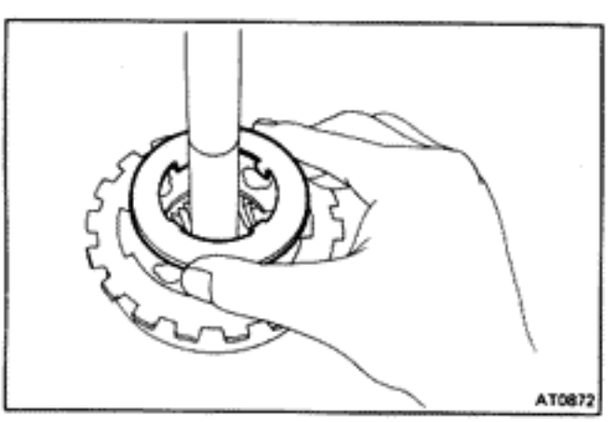

12. **REMOVE STEEL THRUST WASHER AND REAR PINION GEARS FROM INTERMEDIATE SHAFT ASSEMBLY**

13. **REMOVE RACE AND THRUST BEARING FROM INTERMEDIATE SHAFT**

Note the position of the race.

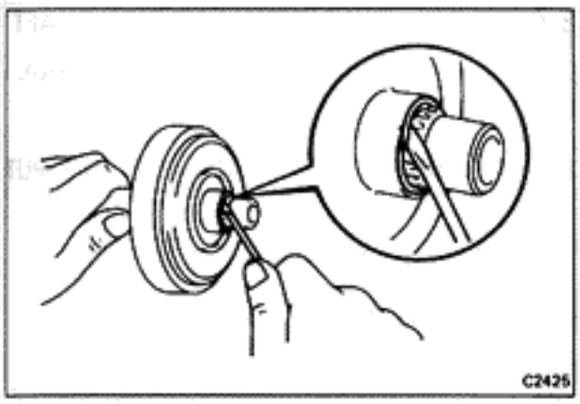

14. INVERT INTERMEDIATE SHAFT AND REMOVE SET RING

15. REMOVE REAR PLANETARY RING GEAR AND BEARING RACE FROM INTERMEDIATE SHAFT

Note the position of the race.

INSPECTION OF PLANETARY GEAR OUTPUT SHAFT

INSPECT DISK, PLATE AND FLANGE

Check that the sliding surface of disc is not worn or burnt.
If the disc is worn or burnt, replace all discs.
Then check that the sliding surface of plate is not worn or burnt.
If necessary, replace them.

NOTE: Do not allow the discs to dry out.
Prepare new discs by soaking them at least two hours in ATF.

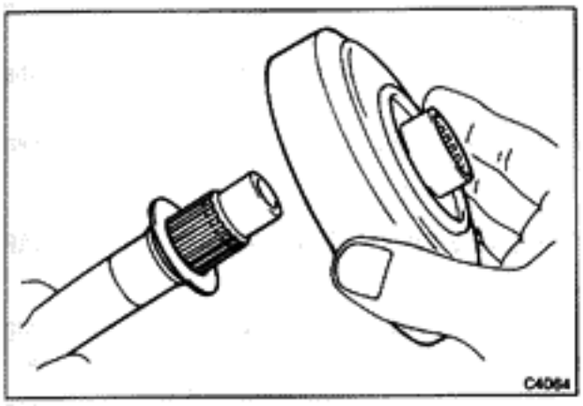

ASSEMBLY OF PLANETARY GEAR OUTPUT SHAFT

(See page AT-75)

1. INSTALL THRUST BEARING RACE AND REAR PLANETARY RING GEAR ON INTERMEDIATE SHAFT

Slip the thrust bearing race and ring gear onto the shaft with the exterior splines up, as shown.

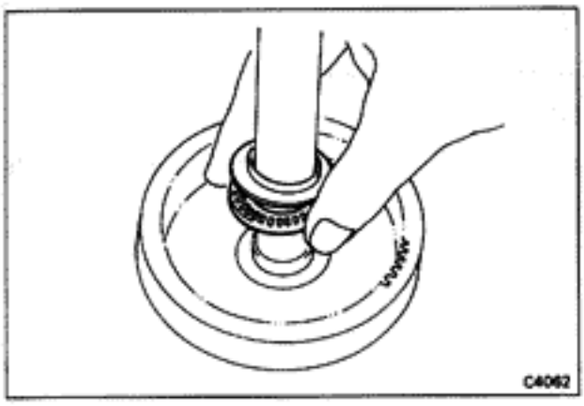

2. INSTALL SET RING ON INTERMEDIATE SHAFT

Push down and wind the set ring into place. Check to make sure it is secure.

3. TURN OVER INTERMEDIATE SHAFT AND INSTALL THRUST BEARING AND RACE

Make sure the flat side of the race is against the bearing.

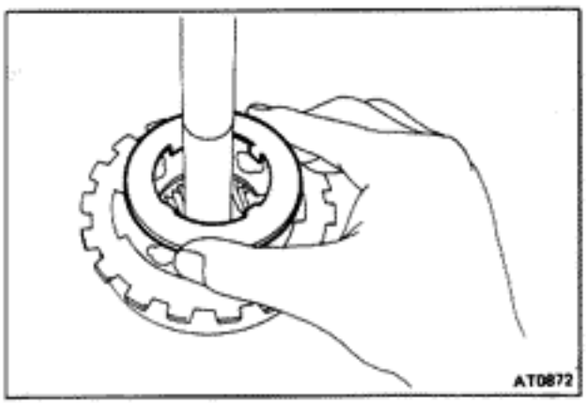

4. INSTALL PINION GEAR ASSEMBLY AND STEEL THRUST WASHER ON REAR PLANETARY CARRIER

Install the washer with the lugs down, fitting into the rear planetary gear carrier.

CAUTION: Make sure the different lug shapes match the openings on the plate.

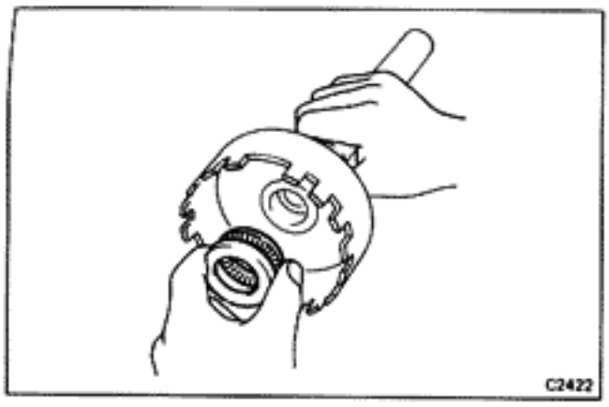

5. INSTALL THREE OIL SEAL RINGS ON OUTPUT SHAFT

Spread the rings apart and slide them into the groove. Hook both ends by hand.

6. INSTALL THRUST BEARING AND RACE ON OUTPUT SHAFT

Hold the cup of the race toward the bearing.

7. USE EXTENSION HOUSING AS ASSEMBLY STAND

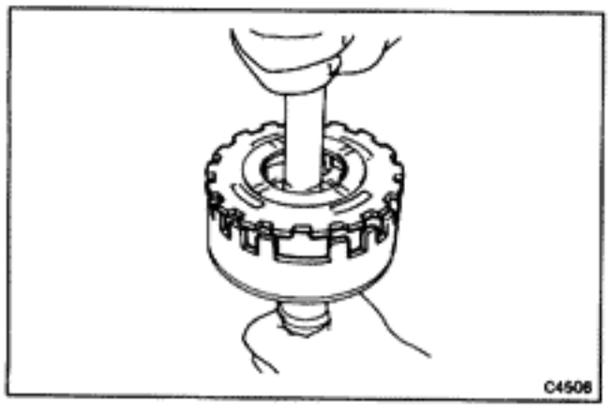

8. INSTALL INTERMEDIATE SHAFT ASSEMBLY IN OUTPUT SHAFT

9. INSTALL REAR PLANETARY CARRIER IN OUTPUT SHAFT

Slide the carrier into place, and make sure that the lugs interlock.

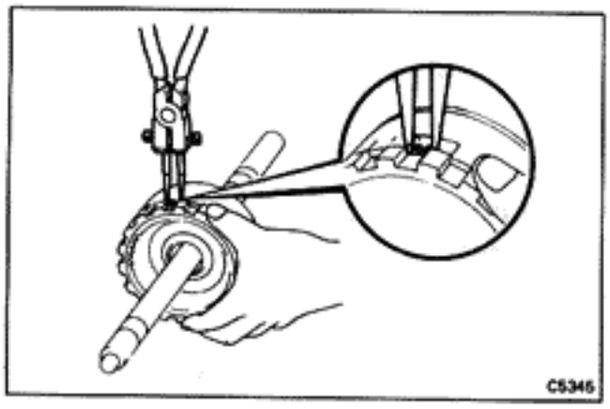

10. SET IN PLACE FRONT PLANETARY RING GEAR

Slide the snap ring downward, and align the lugs with the notches.
Align the ends of the snap ring with the wide gap between the teeth.

11. INSTALL FRONT PLANETARY RING GEAR WITH SNAP RING

While pushing down the ring gear, squeeze the snap ring end with snap ring pliers and install it into the groove.

NOTE: When the snap ring is fully seated, the gap is the width of one lug.

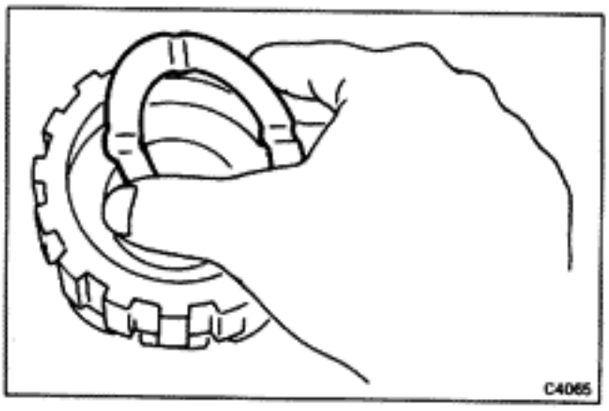

12. INSTALL NYLON THRUST WASHER IN FRONT PLANETARY PINION GEAR

Face the lugs downward and match them with the slots in back of the planetary gear.

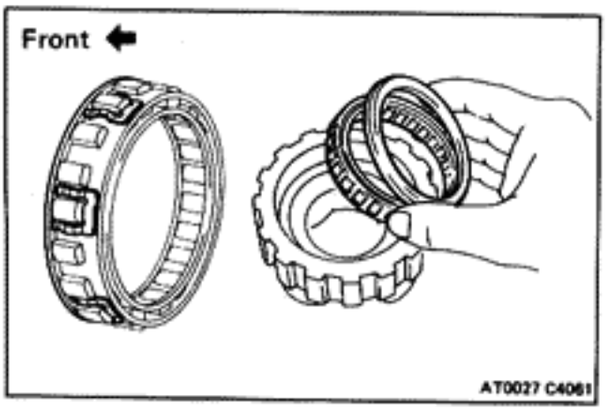

13. INSTALL ONE-WAY CLUTCH

Install the one-way clutch into the outer race, facing the spring cage toward the front.

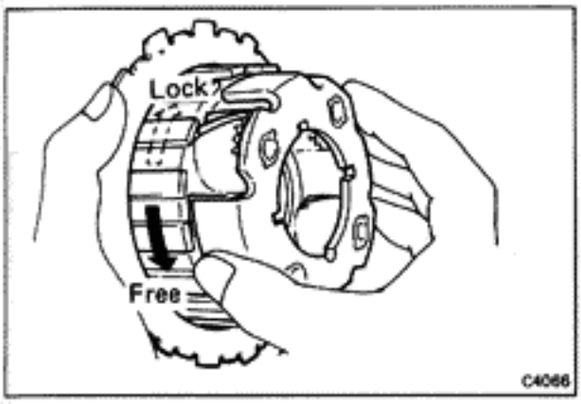

14. TEMPORARILY INSTALL REACTION PLATE ON PLANETARY

Insert the plate into place for testing of the one-way clutch.

15. TEST ONE-WAY CLUTCH

The planetary gear must rotate freely counterclockwise and lock clockwise.

If the clutch does not work correctly, it must be replaced.

16. REMOVE REACTION PLATE

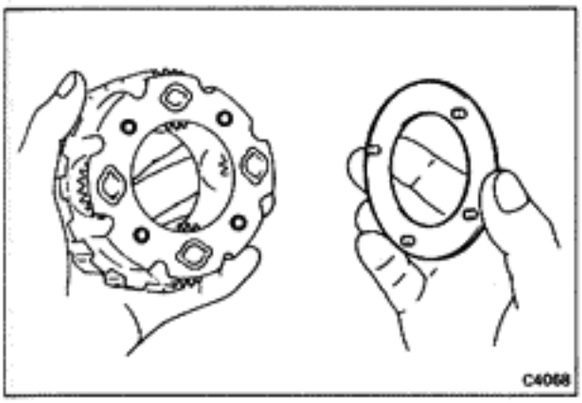

17. INSTALL NYLON THRUST WASHER ON FRONT PLANETARY CARRIER

Apply petroleum jelly to the washer to hold it in place during later assembly. Match the lugs with the planetary carrier.

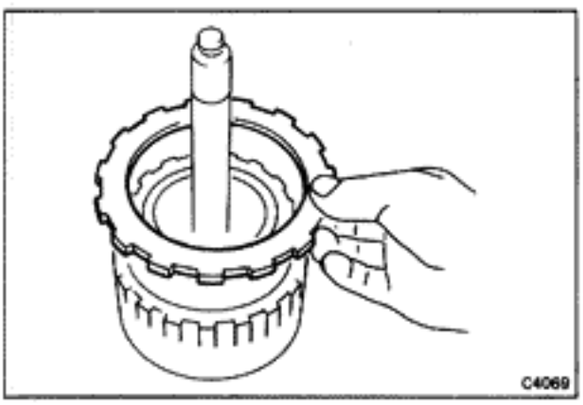

18. INSTALL FRONT PLANETARY GEAR ASSEMBLY TO INTERMEDIATE SHAFT

19. INSTALL PRESSURE PLATE

Install the pressure plate, facing the flat surface toward the intermediate shaft.

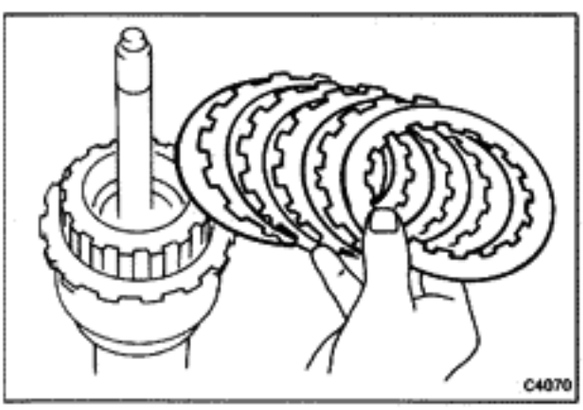

20. INSTALL NO. 3 BRAKE CLUTCH PACK

Using low-pressure compressed air, blow all excess ATF from discs.

CAUTION: High-pressure air will damage the discs.

Install in order: Disc-plate-disc-plate-disc-plate-disc-plate-disc

21. KEEP INNER RACE, APPLY TUBE, THRUST BEARING AND RACE TOGETHER

Transmission Case and Rear Brake Pistons

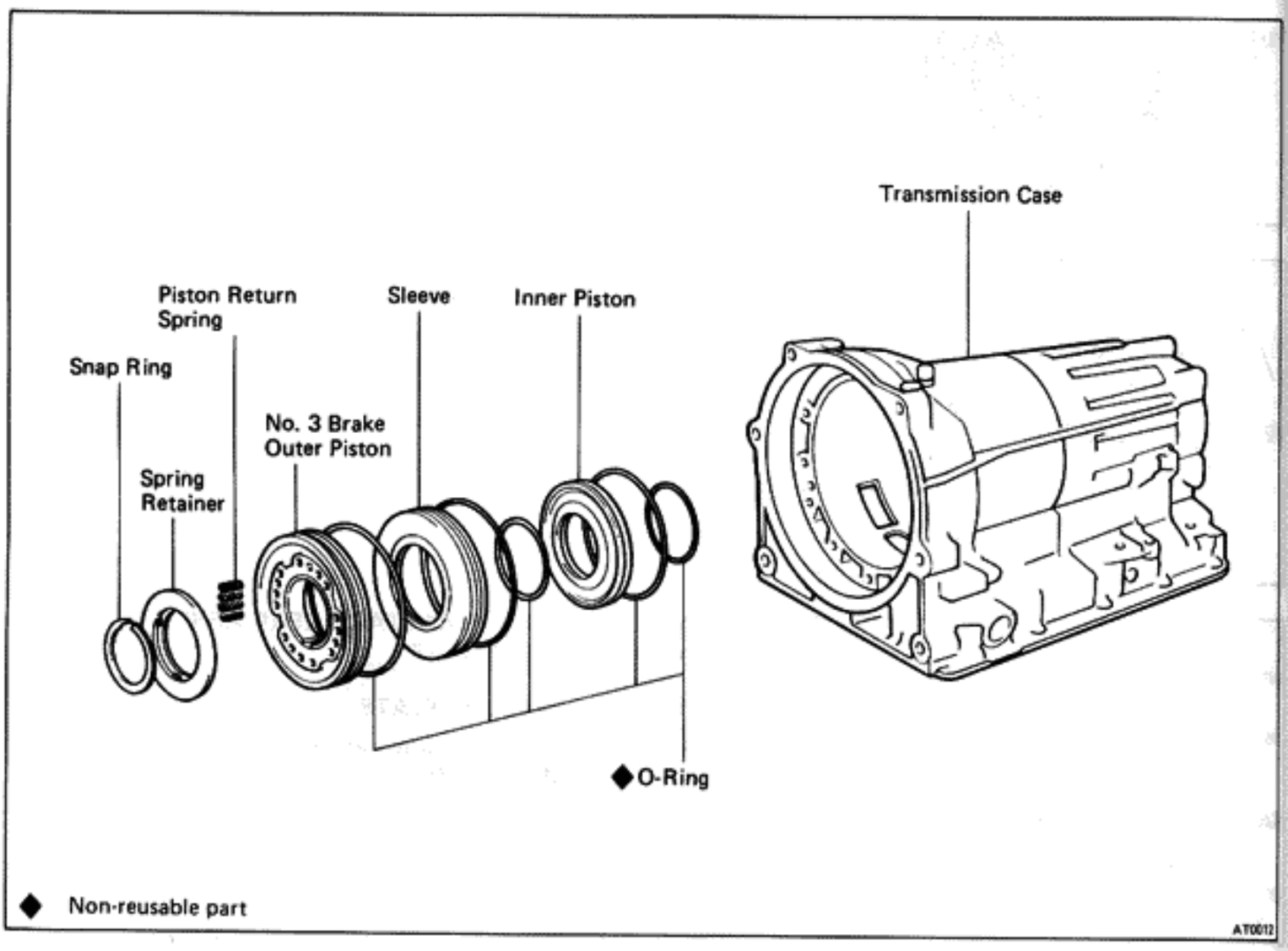

◆ Non-reusable part

AT0012

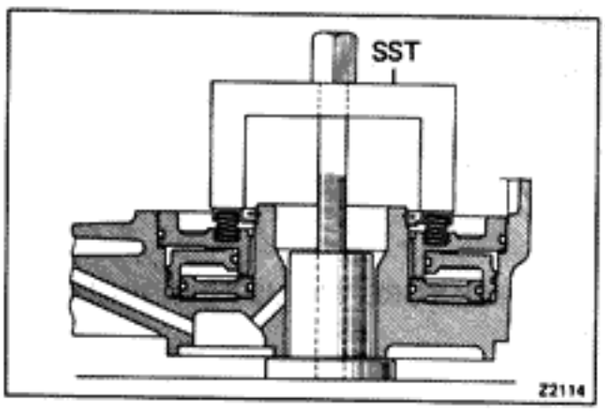

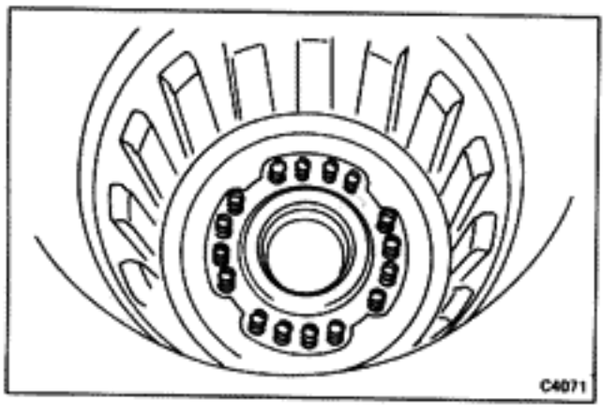

DISASSEMBLY OF TRANSMISSION CASE AND REAR BRAKE PISTONS

1. **COMPRESS RETURN SPRINGS AND REMOVE SPRING RETAINER SNAP RING**

   (a) Install the SST. Gradually and evenly tighten the bolt to compress the springs, being careful not to damage the transmission case with SST.

   SST 09350-20013 (09369-20040)

   (b) Using a screwdriver and hook, remove the snap ring.

2. **REMOVE SPRING RETAINER AND SIXTEEN SPRINGS**

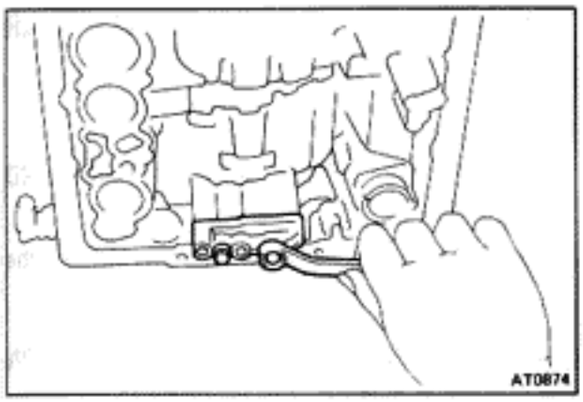

3. REMOVE OUTER PISTON AND REACTION SLEEVE WITH COMPRESSED AIR

(a) Remove the adapter.

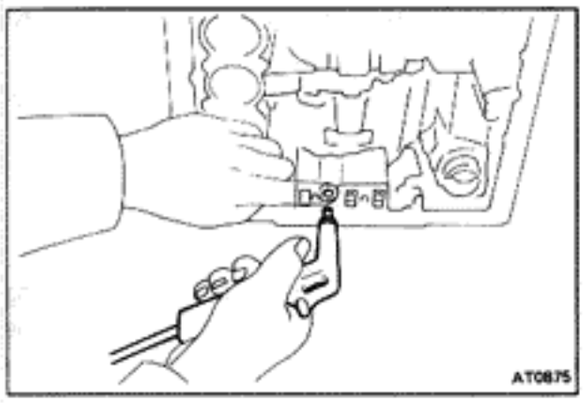

(b) Place several clean shop rags on the piston to catch the piston and sleeve. To pop them out, apply compressed air to the outer and inner piston oil holes.

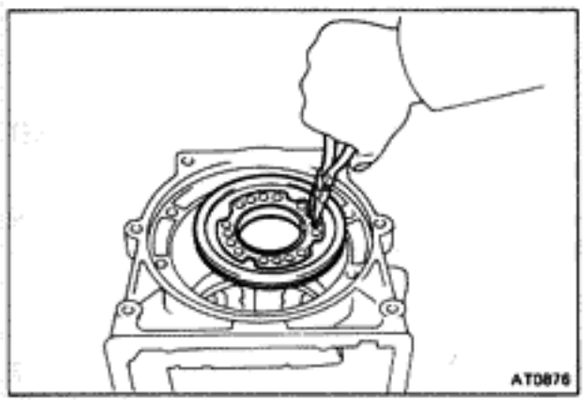

If the piston and sleeve do not pop out with the compressed air:

(c) Using needle-nose pliers, lift out the piston from the case.

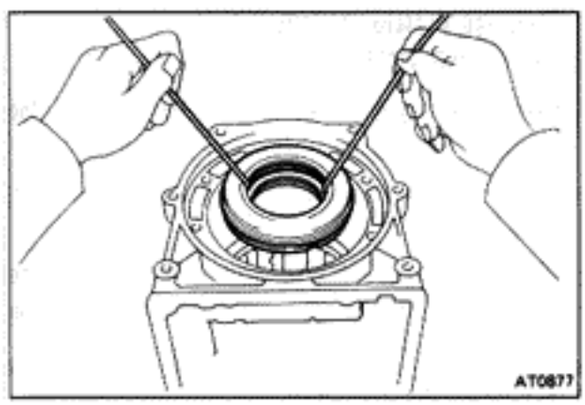

(d) Insert two long hooks behind the reaction sleeve and gradually lift it out of the case.

(e) Using hooks, lift the inner piston out of the case in the same manner.

4. REMOVE O-RINGS FROM OUTER AND INNER PISTONS AND REACTION SLEEVE

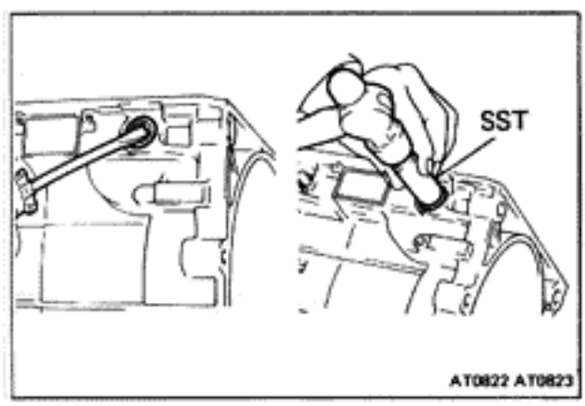

INSPECTION OF CASE COMPONENT GROUP

REPLACEMENT OF MANUAL SHAFT OIL SEALS

(a) Remove the manual shaft oil seals with a screwdriver.

(b) Drive in new left and right oil seals with SST.

SST 09350-20013 (09361-30011)

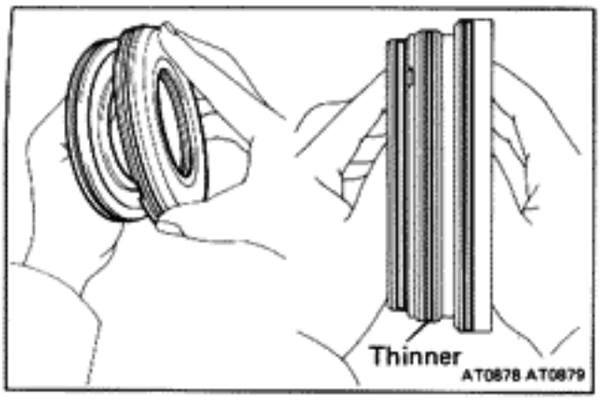

ASSEMBLY OF TRANSMISSION CASE AND REAR BRAKE PISTONS

(See page AT-80)

1. **INSTALL NEW O-RINGS ON REACTION SLEEVE AND PISTONS**

   CAUTION: The thinner O-ring goes on the outside of the reaction sleeve.

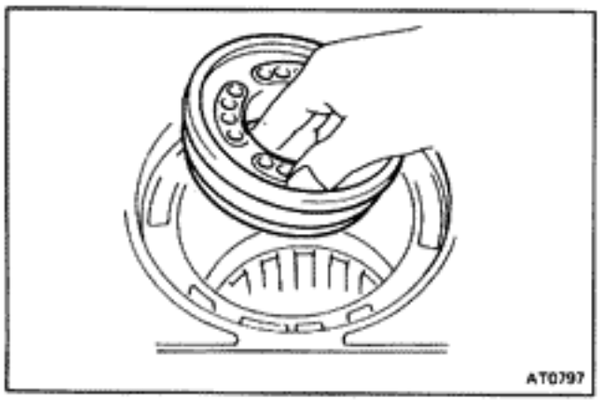

2. **INSTALL INNER AND OUTER PISTONS IN REACTION SLEEVE**

   (a) Push the inner piston into the cupped side of the reaction sleeve.

   (b) Push the outer piston onto the other side of the reaction sleeve.

3. **INSTALL PISTONS AND SLEEVE IN CASE**

   CAUTION: Be careful not to damage the O-rings.

   Hold the assembly with the outer piston upward (spring seats visible), and push the assembly into its bore in the case.

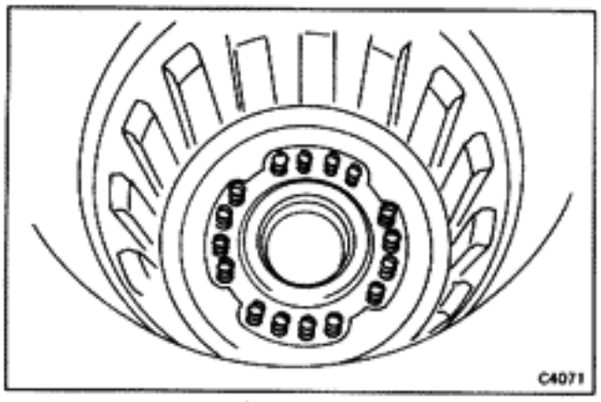

4. **INSTALL SST BASE UNDER CASE**

   SST 09350-20013

5. **INSTALL SIXTEEN PISTON RETURN SPRINGS AND SET RETAINER WITH SNAP RING IN PLACE**

   NOTE: The springs are visible through the cutout in the case, which helps position them more easily.

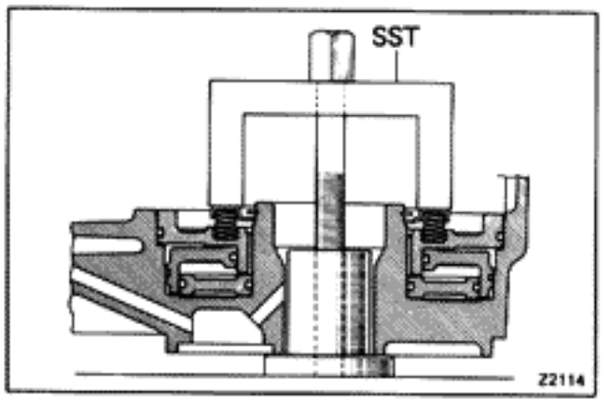

6. **COMPRESS PISTON RETURN SPRINGS TO ALLOW INSTALLATION OF SNAP RING**

   CAUTION: Do not overtighten the bolt and bend the spring retainer.

   (a) Carefully position the spring compressor on the spring retainer.

   (b) Gradually and evenly tighten the bolt to compress the springs, being careful not to damage the transmission case with SST.

   SST 09350-20013 (09369-20040)

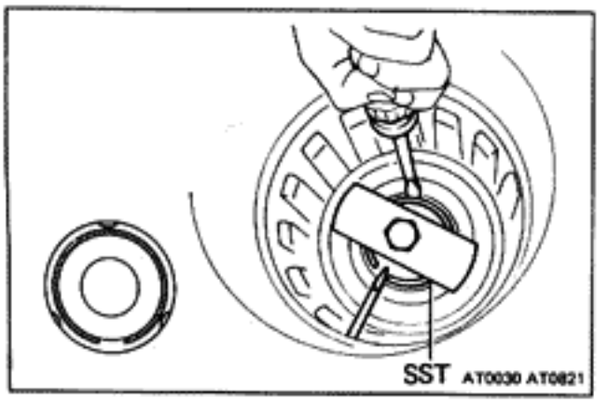

7. **INSTALL SNAP RING**

   (a) Push the ring into place with your fingers. Visually check to make sure it is fully seated and centered by the three lugs on the spring retainer.

   (b) Remove the SST.

   SST 09350-20013 (09369-20040)

8. **KEEP MANUAL VALVE LEVER, PARKING LOCK PAWL AND ACCUMULATOR**

Valve Body

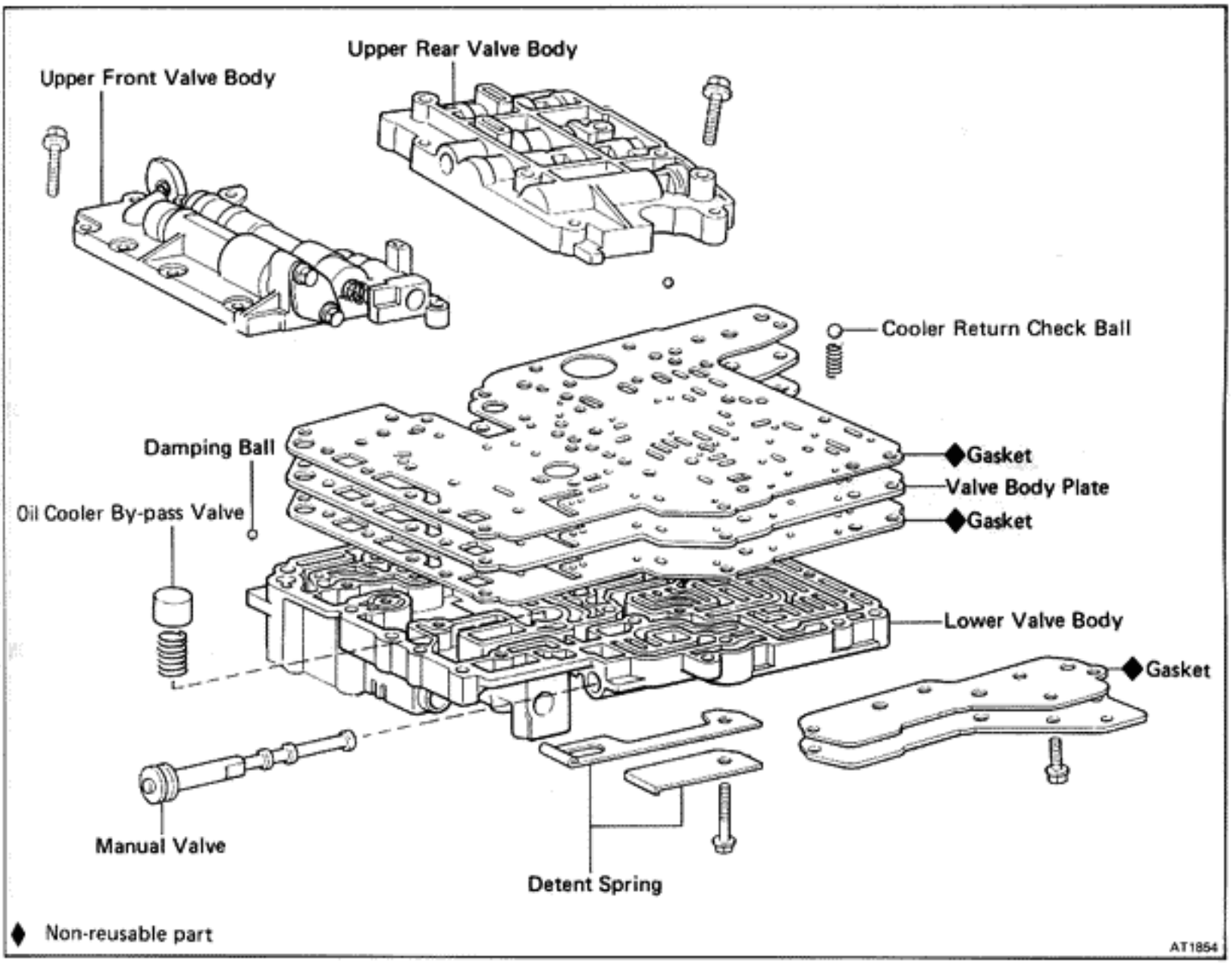

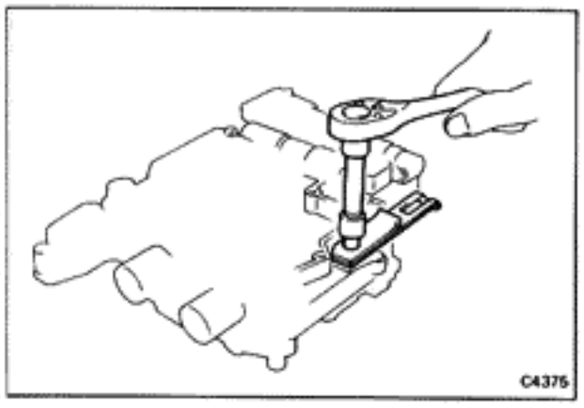

(Disassembly of Valve Body)

1. **UNBOLT AND REMOVE DETENT SPRING**
2. **REMOVE MANUAL VALVE**

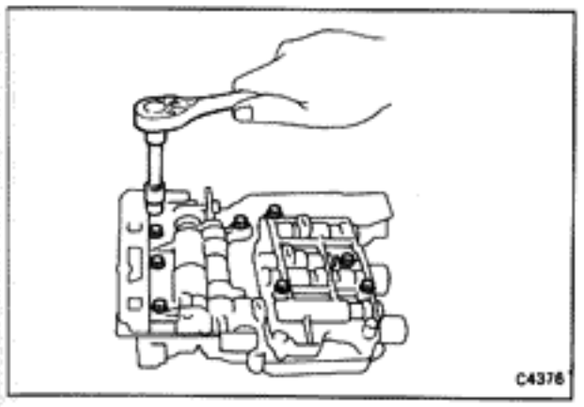

3. **TURN ASSEMBLY OVER AND REMOVE NINE BOLTS FROM UPPER FRONT VALVE BODY AND UPPER REAR VALVE BODY**

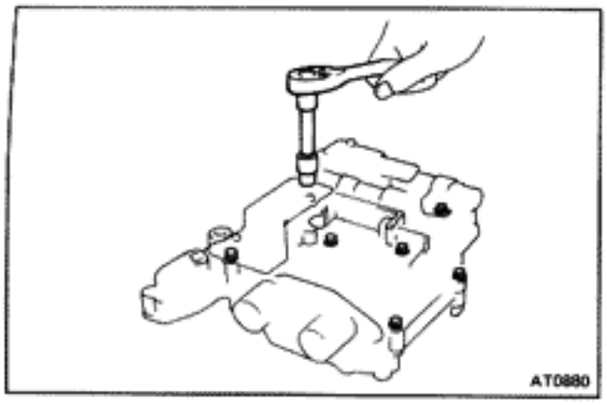

4. TURN ASSEMBLY OVER AND REMOVE SET BOLTS FROM LOWER VALVE BODY

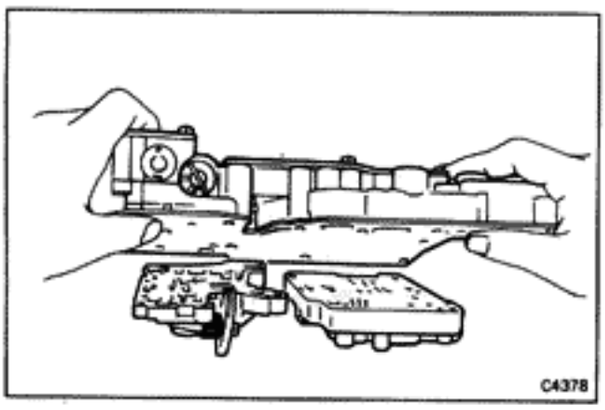

5. LIFT OFF LOWER VALVE BODY AND PLATE AS SINGLE UNIT

Hold valve body plate to lower valve body.

NOTE: Be careful that the check valve and balls do not fall out.

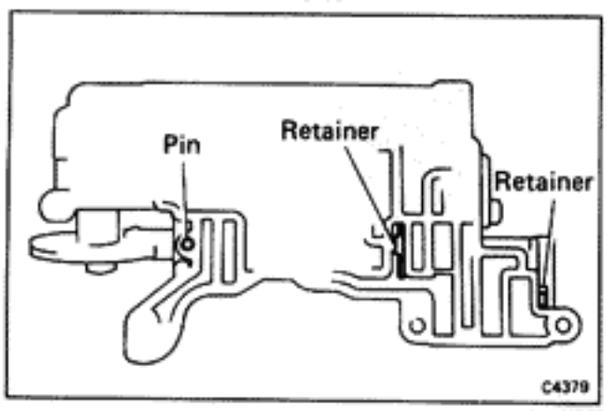

6. WATCH FOR STEEL BALLS, RETAINERS AND PINS IN VALVE BODY

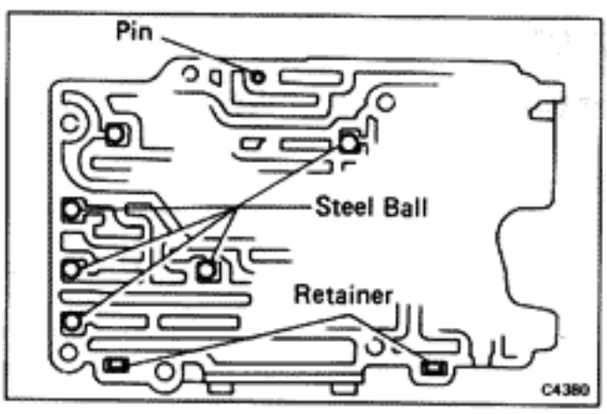

(Lower Valve Body)

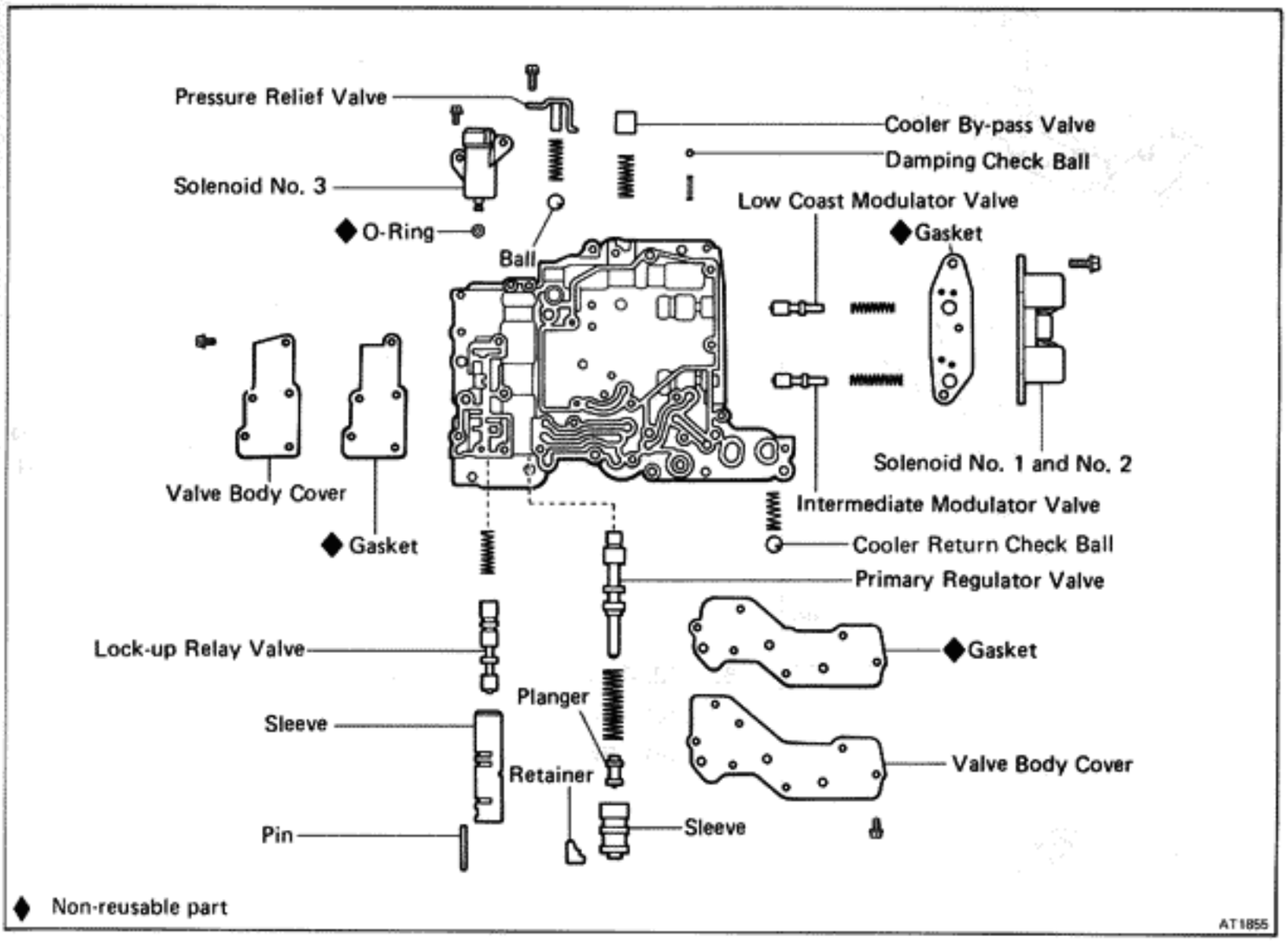

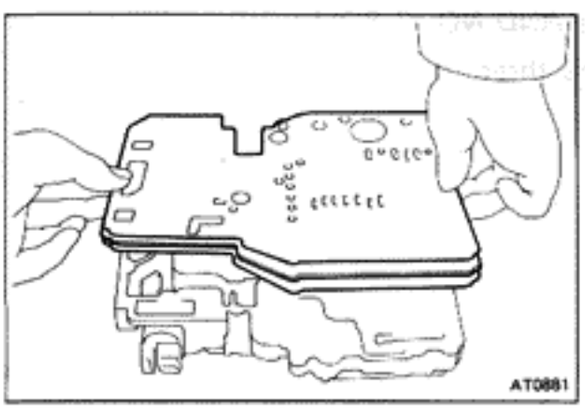

DISASSEMBLY OF LOWER VALVE BODY

1. **REMOVE LOWER VALVE BODY PLATE AND GASKETS**

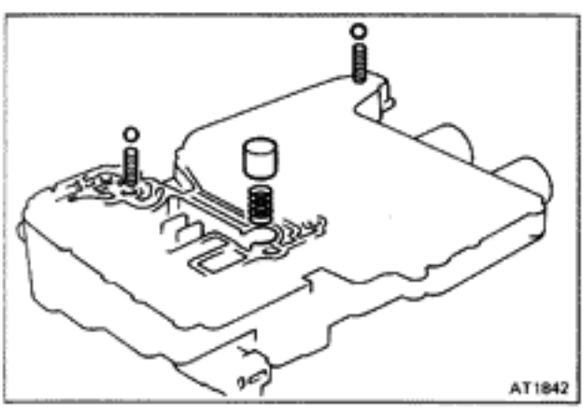

2. **REMOVE DAMPING CHECK BALL, COOLER RETURN CHECK BALL, COOLER BY-PASS VALVE AND SPRINGS**

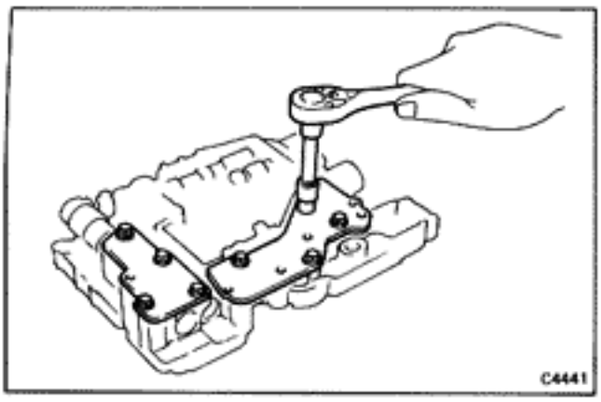

3. TURN ASSEMBLY OVER, REMOVE SET BOLTS AND REMOVE TWO VALVE BODY COVERS AND GASKETS

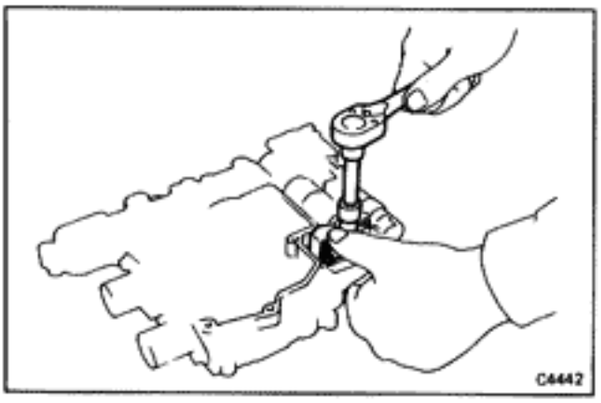

4. REMOVE PRESSURE RELIEF VALVE

(a) Remove the bolt and retainer.

(b) Remove the spring and steel ball.

CAUTION: Cover the spring with your hand. Slowly remove the bolt, being careful not to pop out the spring.

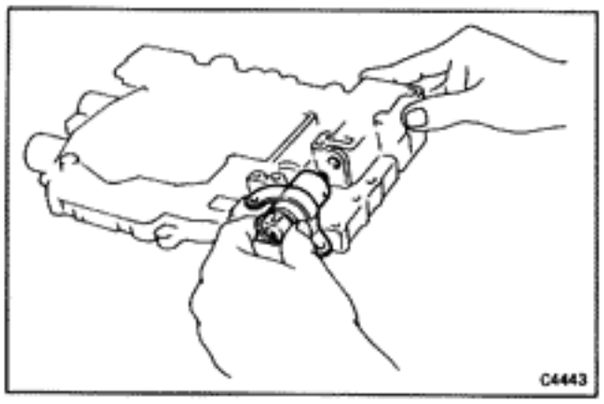

5. REMOVE NO. 3 SOLENOID

(a) Remove the bolt.

(b) Remove the solenoid from the bore.

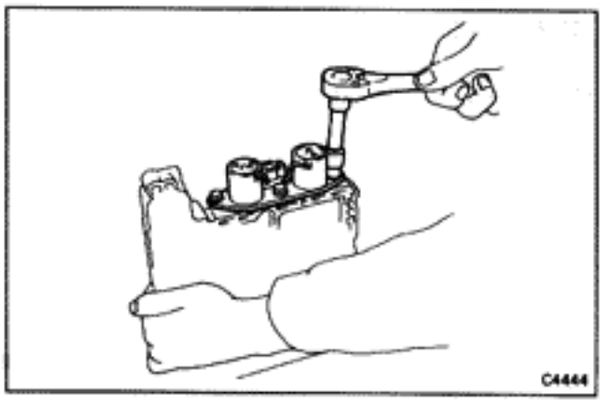

6. REMOVE NO. 1 AND NO. 2 SOLENOID

(a) Remove the three bolts, the solenoid and gasket.

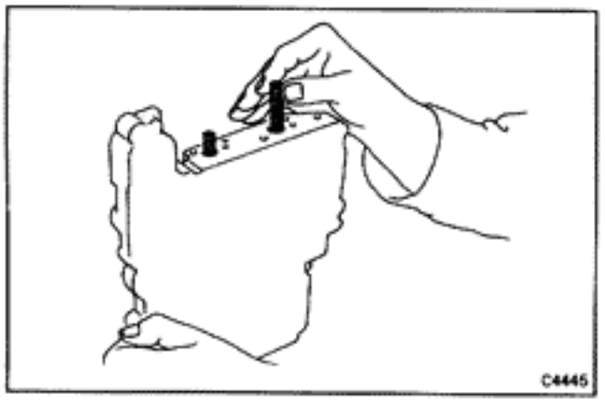

(b) Remove the two springs from the bore.

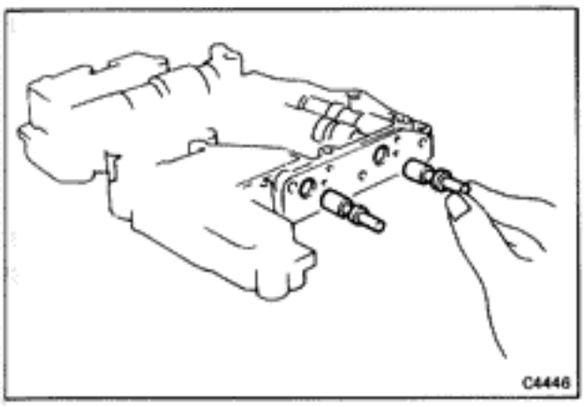

7. REMOVE LOW COAST MODULATOR VALVE AND INTERMEDIATE MODULATOR VALVE

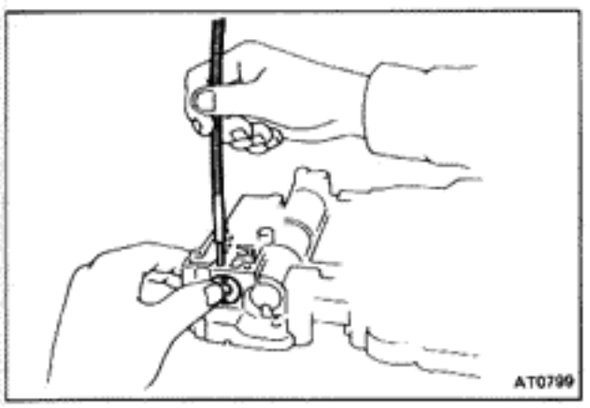

8. REMOVE LOCK-UP RELAY VALVE

(a) Remove the pin by pushing the sleeve.

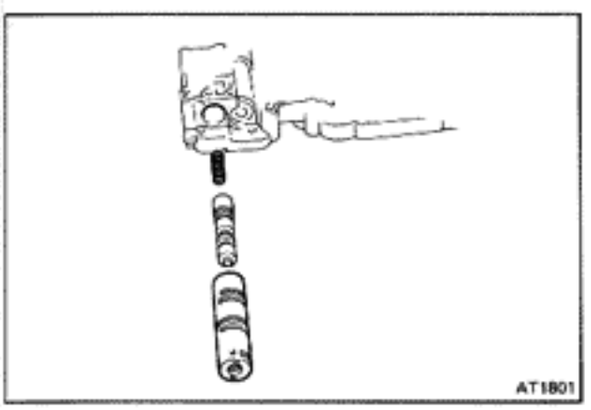

(b) Remove sleeve with lock-up relay valve and spring.

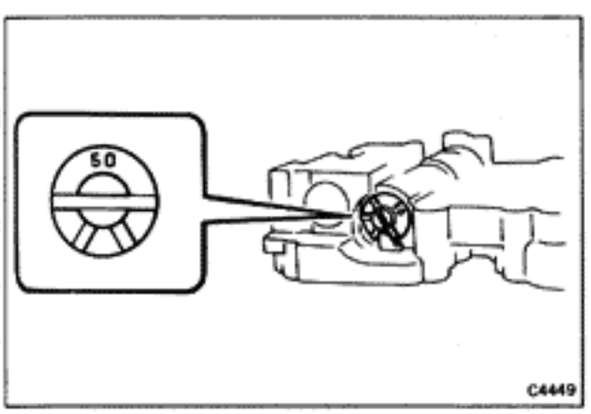

9. REMOVE SPRING RETAINER FROM PRIMARY REGULATOR VALVE

WARNING: Highly compressed spring inside — keep away from face.

(a) Place a mark on the bevel when the retainer is positioned.

NOTE: When reassembling, position the retainer in the same position.

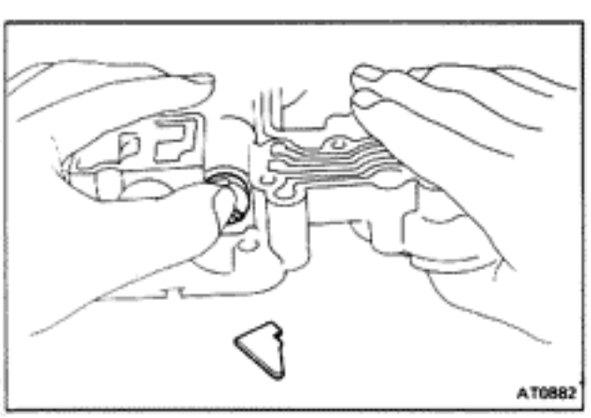

(b) To remove the retainer, hold the valve body face down, and press in on the valve sleeve. The retainer will drop out. Slowly relieve spring tension.

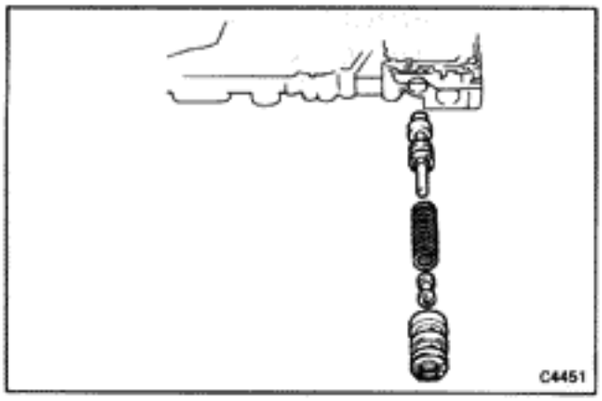

(c) Remove the sleeve, plunger, spring and primary regulator valve.

INSPECTION OF LOWER VALVE BODY

INSPECT VALVE SPRINGS

Check for damage, squareness, rust and distorted coils. Measure the spring free height and replace if less than that shown below.

Spring	Free height mm (in.)		Coror
(1) Primary regulator valve	56.30	(2.2165)	Blue
(2) Low coast modulator valve	42.35	(1.6673)	None
(3) Intermediate modulator valve	35.43	(1.3949)	Red
(4) Lock-up relay valve	32.60	(1.2835)	Green
(5) Oil cooler by-pass valve	33.32	(1.3118)	Yellow
(6) Pressure relief valve	32.14	(1.2654)	None
(7) Damping check ball	20.00	(0.7874)	None

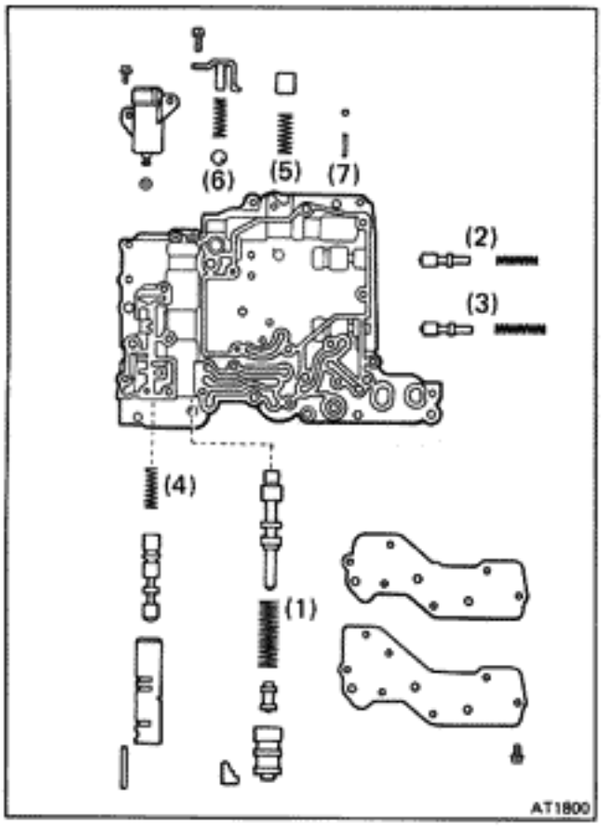

ASSEMBLY OF LOWER VALVE BODY

(See page AT-85)

1. INSERT PRIMARY REGULATOR VALVE AND SPRING

(a) Set the valve body on the edge and drop in the valve, large end first, and the spring.

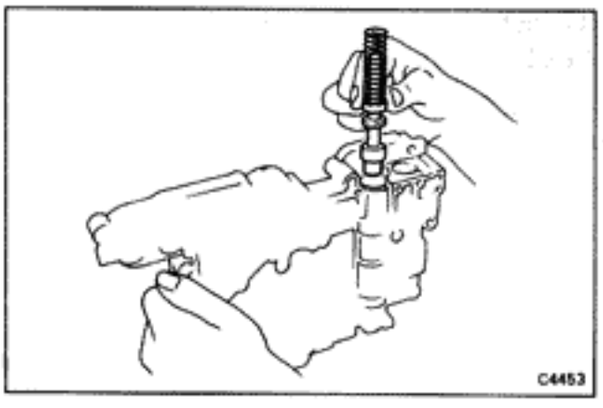

(b) Make sure that the primary regulator valve fits flush with the valve body.

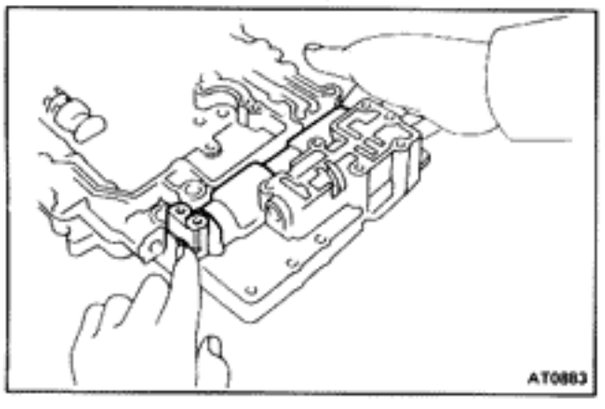

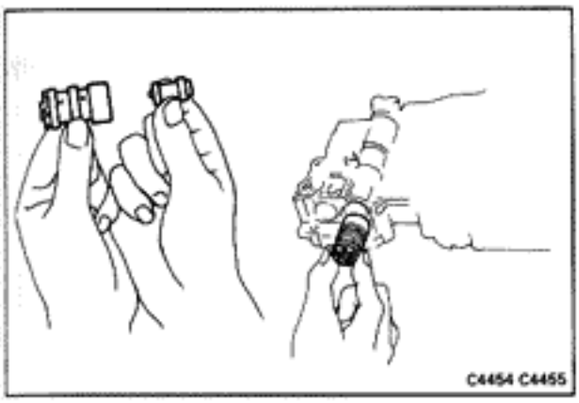

(c) Insert with the rounded end first. Make sure that it is fully inserted; the plunger should be recessed inside the sleeve.

(d) Insert the sleeve with the plunger.

(e) Install the regulator valve sleeve retainer.

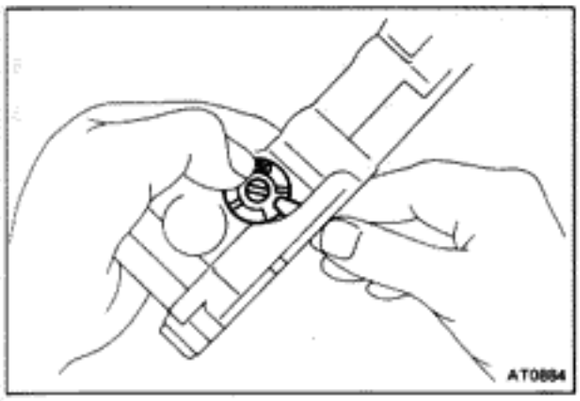

(f) Install the retainer on the bevel.

NOTE: Install the retainer to the same position of the sleeve, as when disassembling.

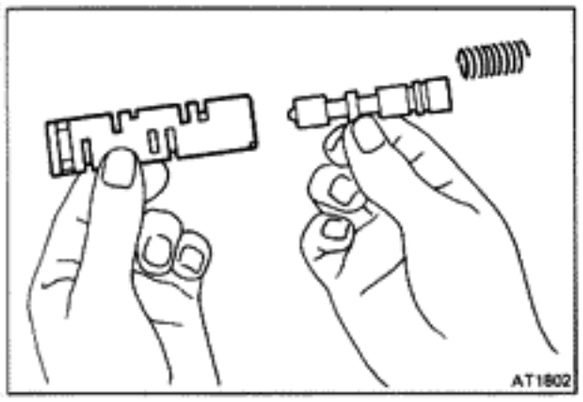

2. INSTALL LOCK-UP RELAY VALVE

(a) Install the lock-up relay valve into the sleeve.

(b) Install the spring into the lock-up relay valve.

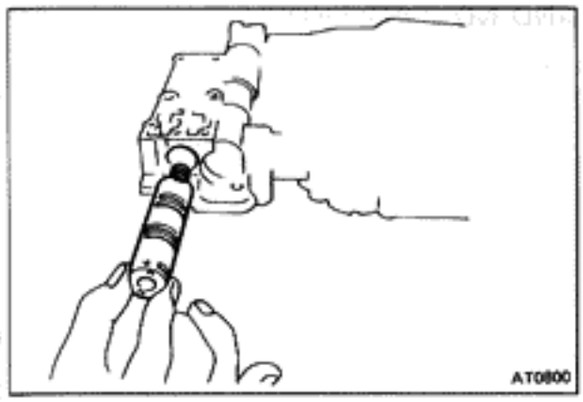

(c) Install the lock-up relay valve assembly into the bore.

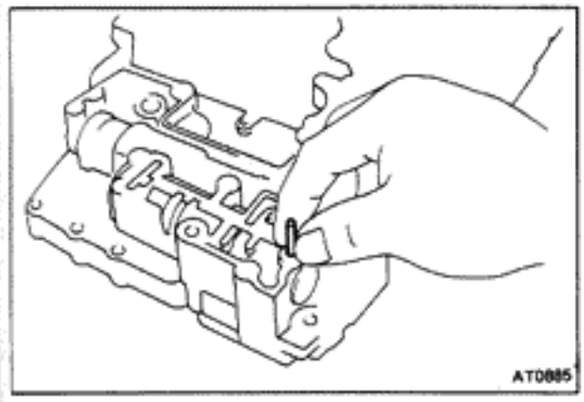

(d) Install the pin.

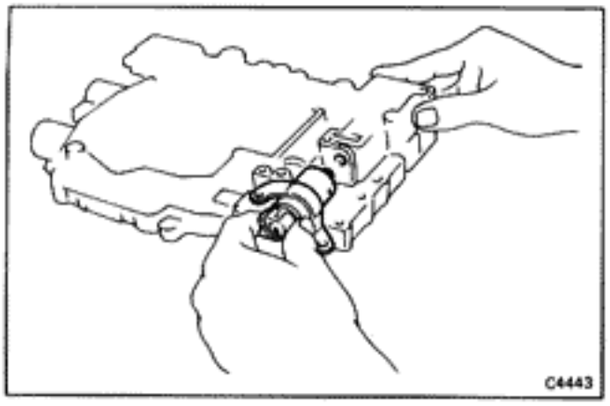

3. INSTALL NO.3 SOLENOID

(a) Install the No. 3 solenoid onto the lower valve body.

(b) Temporarily tighten the bolt.

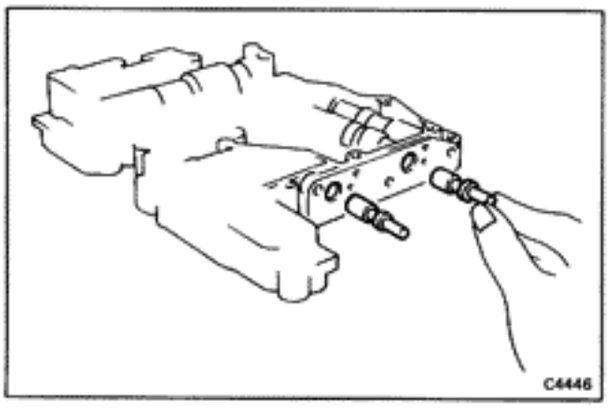

4. INSTALL TWO VALVES

(a) Install the low coast modulator valve into the bore.

(b) Install the intermediate modulator valve into the bore.

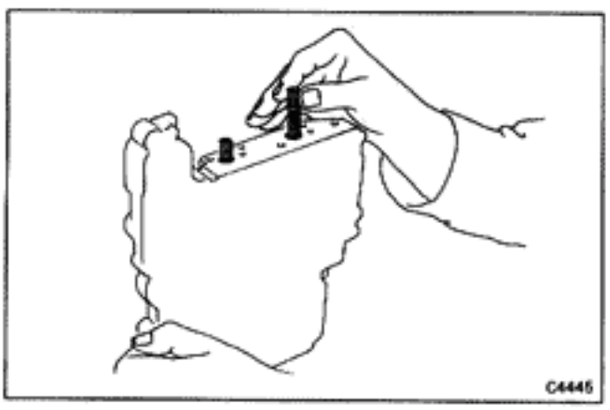

5. INSTALL TWO VALVE SPRINGS

NOTE: Install the short spring in the right bore.

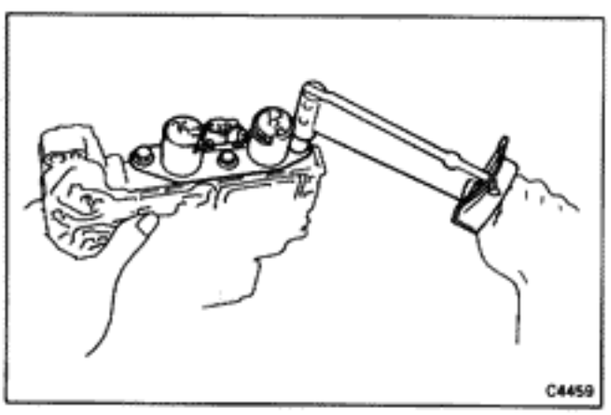

6. INSTALL NO.1 AND NO.2 SOLENOIDS

Install the solenoid over the gasket.
Tighten the three bolts.

Torque: 100 kg-cm (7 ft-lb, 10 N·m)

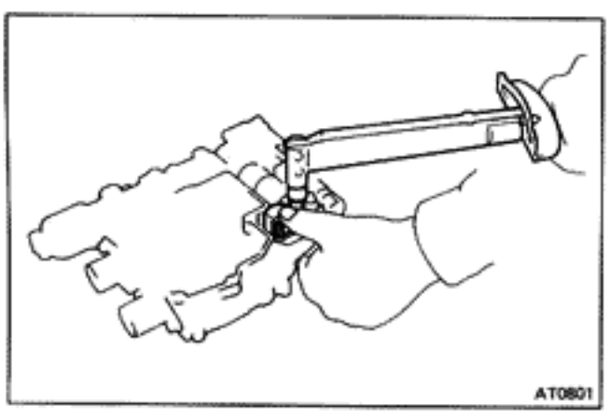

7. INSTALL PRESSURE RELIEF VALVE

(a) Place the steel ball and spring onto the body.

(b) Install the retainer.

Torque: 55 kg-cm (48 in.-lb, 5.4 N·m)

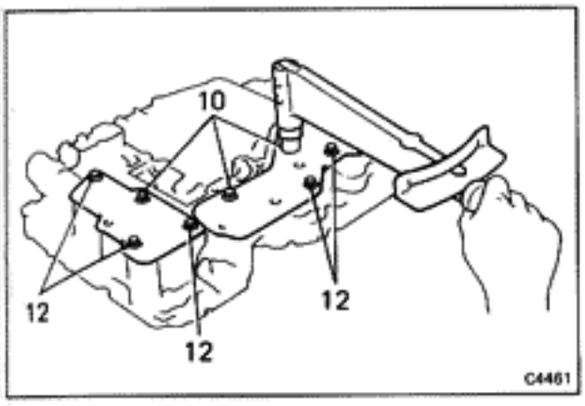

8. INSTALL TWO VALVE BODY COVERS

NOTE: Use the wave washer for the smaller cover.

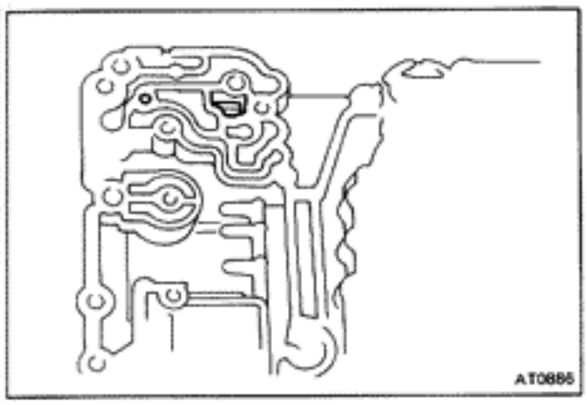

9. CHECK RETAINERS AND LOCATING PINS

Make sure that the retainers and pins are installed correctly.

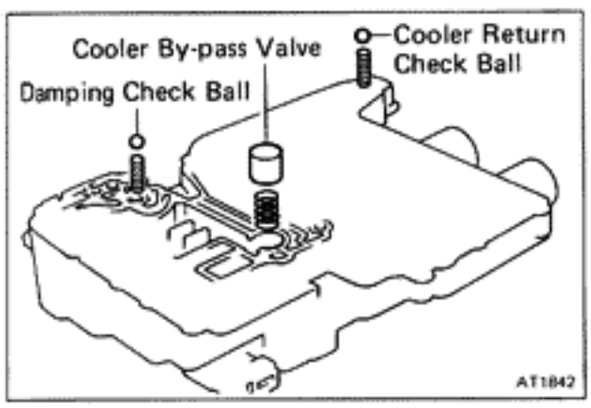

10. INSTALL SPRINGS, DAMPING CHECK BALL, COOLER RETURN CHECK BALL AND COOLER BY-PASS CHECK VALVE

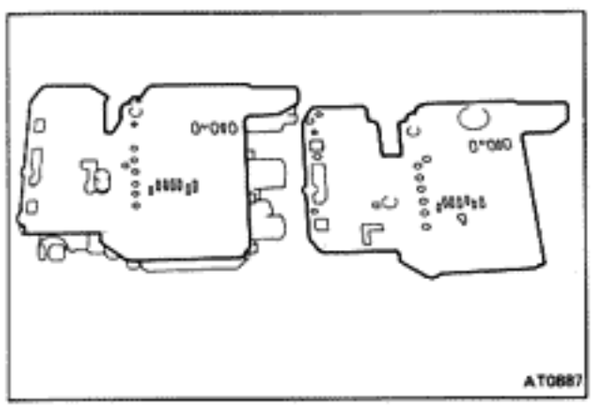

11. INSTALL LOWER VALVE BODY GASKET

Note that the two gaskets are not interchangeable. The gasket must lay flat on the valve body.

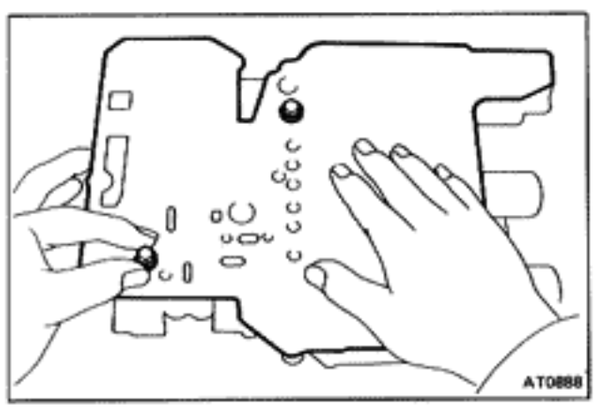

12. INSTALL LOWER VALVE BODY PLATE

Set the plate into place. Temporarily install two the short bolts finger tight to compress the plate against the spring-loaded check valve.

NOTE: Use the oil strainer bolts.

(Upper Front Valve Body)

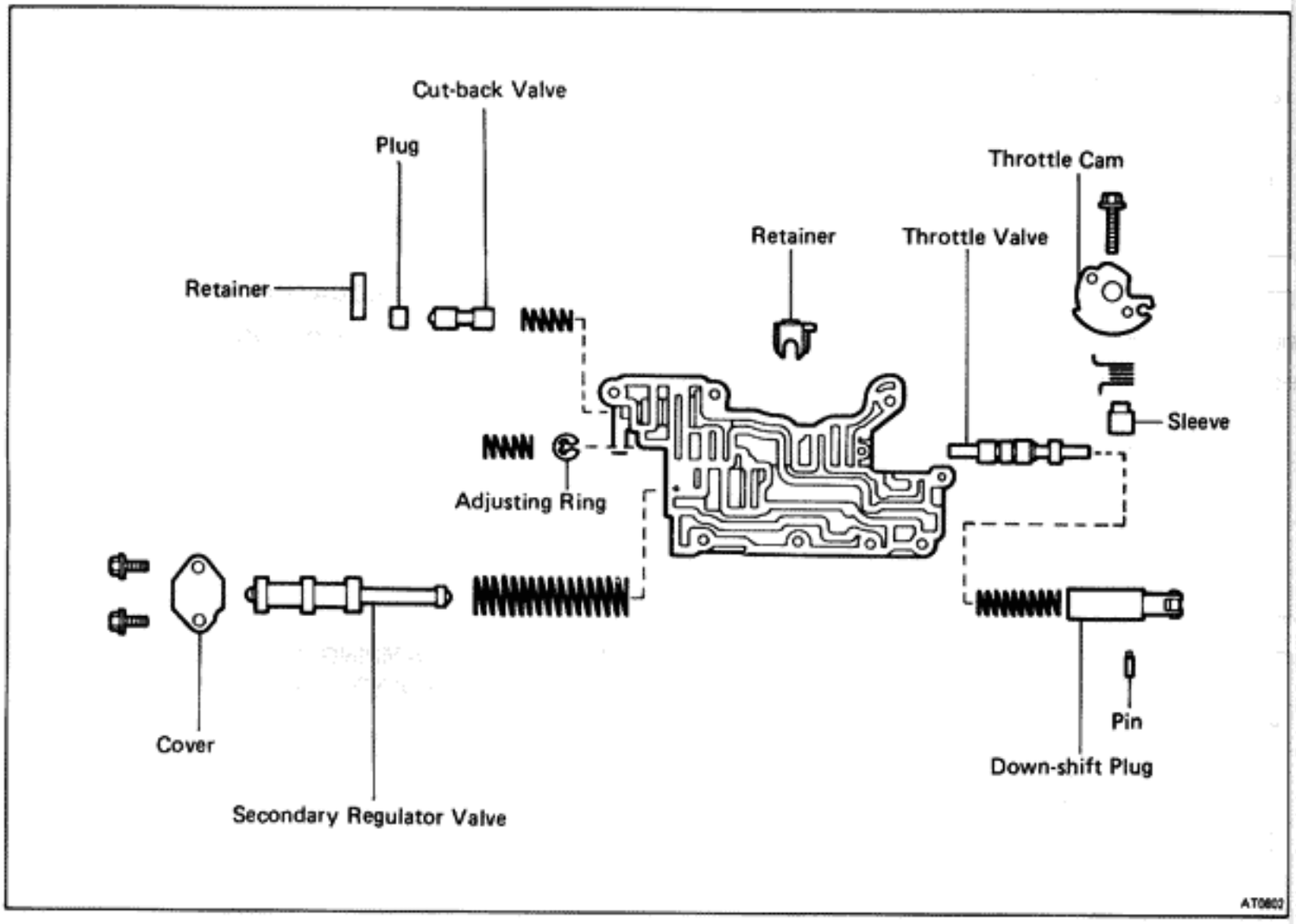

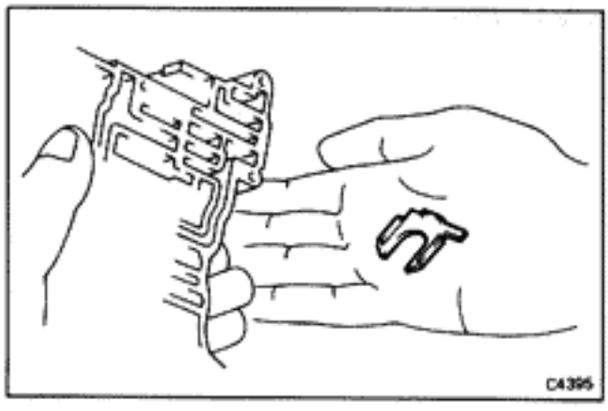

DISASSEMBLY OF UPPER FRONT VALVE BODY

1. **REMOVE THROTTLE VALVE RETAINER**

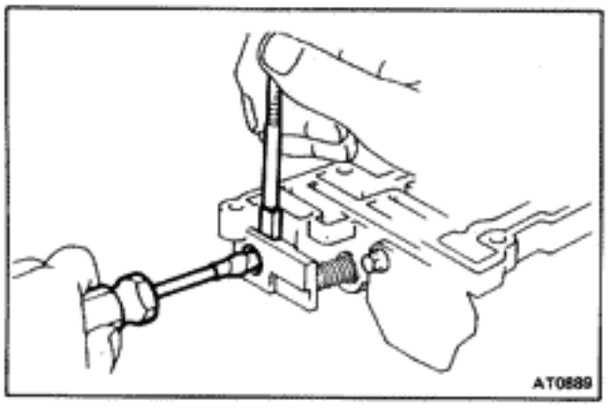

2. **REMOVE CUT-BACK PLUG RETAINER**

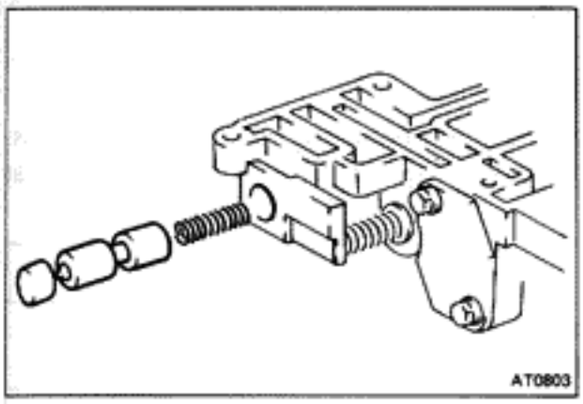

3. REMOVE PLUG AND CUT-BACK VALVE

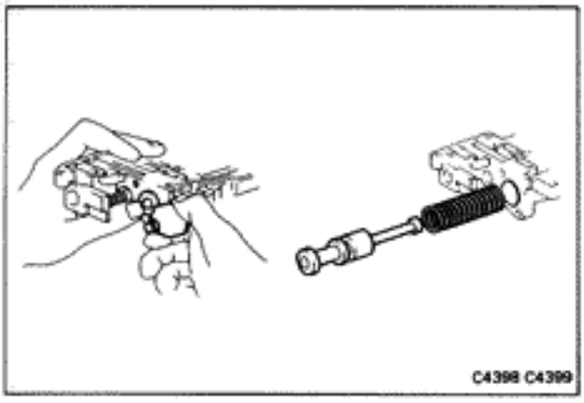

4. REMOVE SECONDARY REGULATOR VALVE AND SPRING

(a) Remove one bolt from the plate over the valve and loosen the other one. Slowly rotate the plate to uncover the valve.

WARNING: Valve is spring-loaded.

(b) Remove the valve and spring. Keep the spring with the valve.

(c) Remove the other bolt and remove the cover plate.

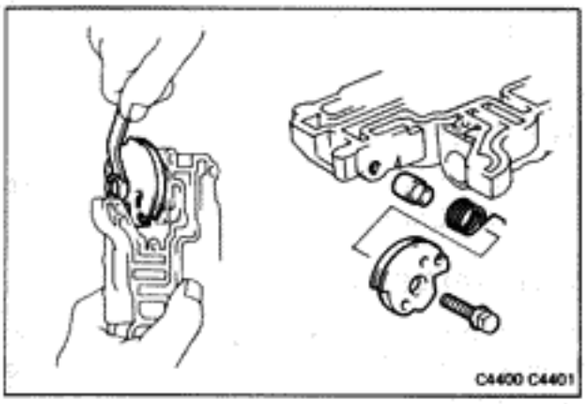

5. REMOVE THROTTLE CAM

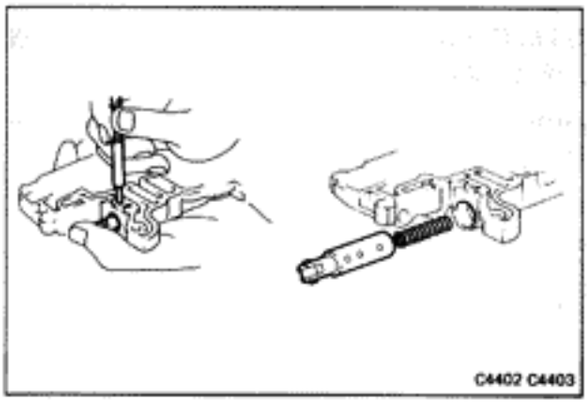

6. REMOVE DOWN-SHIFT PLUG AND SPRING

(a) Remove the pin by pushing the down-shift plug.

(b) Remove the down-shift plug with the sleeve and spring.

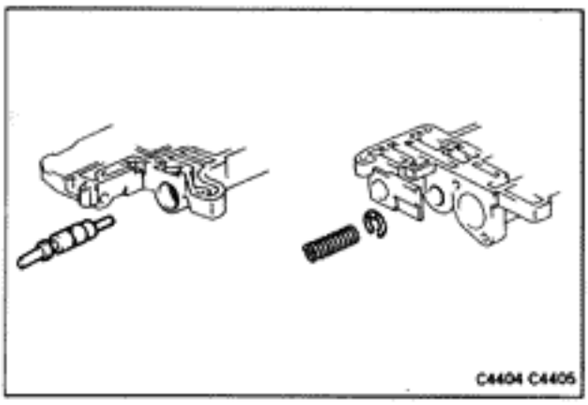

7. REMOVE THROTTLE VALVE AND SPRING

8. REMOVE ADJUSTING RINGS

Note the number of adjusting rings installed.

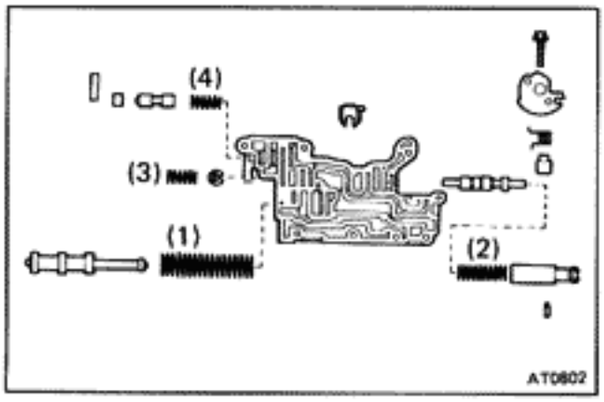

INSPECTION OF UPPER FRONT VALVE BODY

INSPECT VALVE SPRINGS

Check for damage, squareness, rust and collapsed coils. Measure the spring free height and replace if less than that shown below.

Spring	Free height mm (in.)		Color
(1) Secondary regulator valve	71.27	(2.8059)	Green
(2) Down-shift plug	39.55	(1.5571)	Green
(3) Throttle valve	19.24	(0.7575)	None
(4) Cut-back valve	23.00	(0.9055)	Green

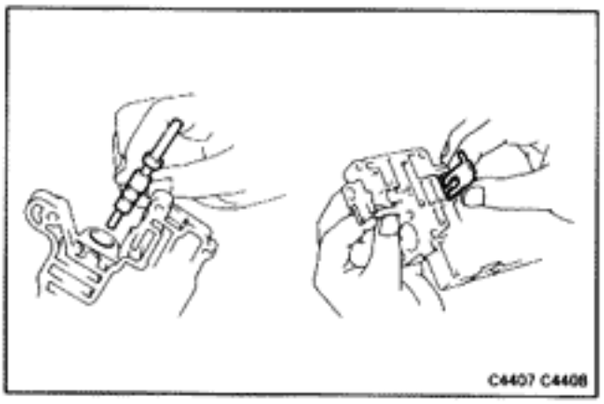

ASSEMBLY OF UPPER FRONT VALVE BODY

(See page AT-92)

1. INSERT THROTTLE VALVE

Note arrangement in the figure. Make sure that the valve is inserted fully into the bore.

2. INSTALL THROTTLE VALVE RETAINER

Coat the retainer with petroleum jelly to keep it in place. Note position of tabs in the figure. Slip the retainer into place in the valve body.

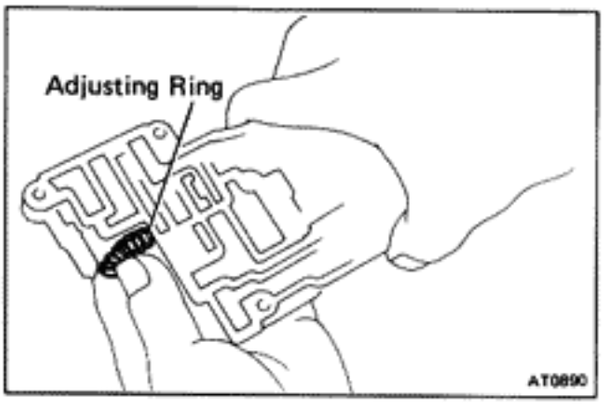

3. INSTALL ADJUSTING RINGS AND SMALL SPRING ON THROTTLE VALVE SHAFT

(a) Install the same number of adjusting rings as were removed during disassembly.

(b) Slip the spring over the end of the valve shaft. Compress and slide into place.

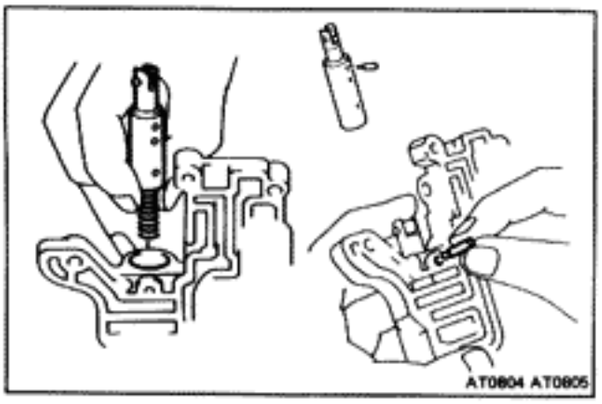

4. INSERT SPRING AND DOWN-SHIFT PLUG

(a) Push the down-shift plug into the bore.

(b) Coat the pin with petroleum jelly and install it to hold the sleeve.

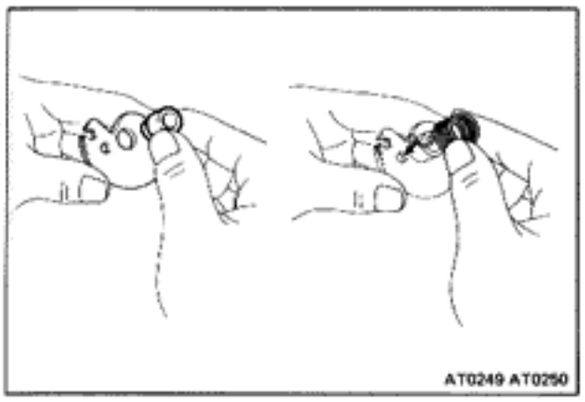

5. ASSEMBLE THROTTLE CAM

(a) Insert the sleeve through one side of the cam.

(b) Install the spring with the hook through the hole in the cam.

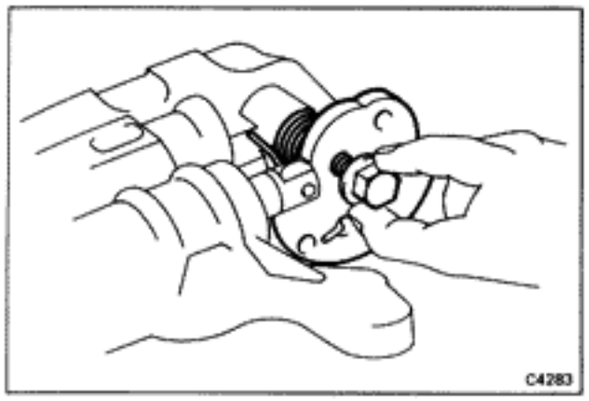

6. INSTALL CAM ASSEMBLY ON UPPER FRONT VALVE BODY

Check the position of the spring ends with the figure. Tighten the bolt.

Torque: 75 kg-cm (65 in.-lb, 7.4 N·m)

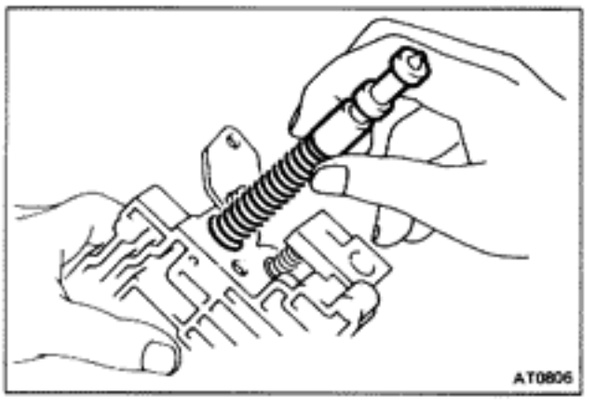

7. INSTALL SECONDARY REGULATOR VALVE

(a) Partially install the cover plate and insert the spring and secondary regulator valve.

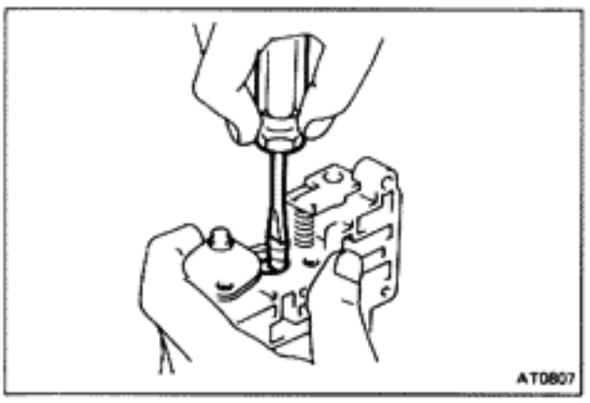

(b) Compress the spring and swing the cover plate into place.

(c) Install the second bolt in the cover plate and tighten both bolts.

Torque: 55 kg-cm (48 in.-lb, 5.4 N·m)

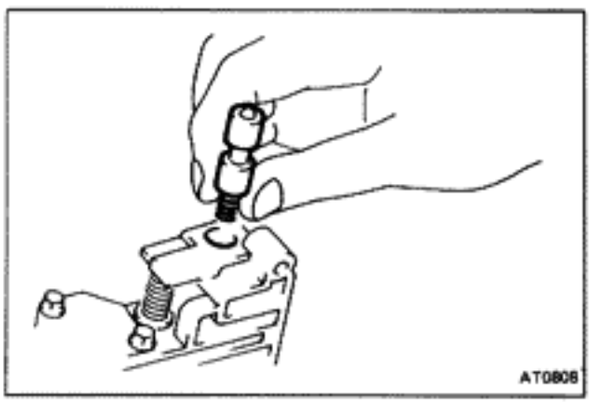

8. INSERT SPRING AND CUT-BACK VALVE

Install the valve with smaller end first.

9. INSTALL PLUG AND VALVE RETAINER

Coat the retainer with petroleum jelly to keep it in place.

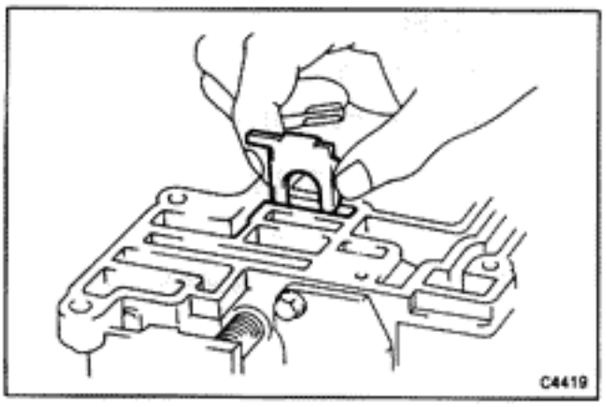

10. INSTALL THROTTLE VALVE RETAINER

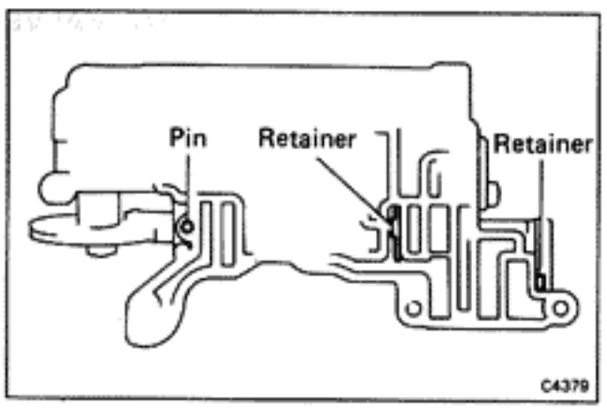

11. MAKE SURE THAT SLEEVE IS HELD BY PIN

(Upper Rear Valve Body)

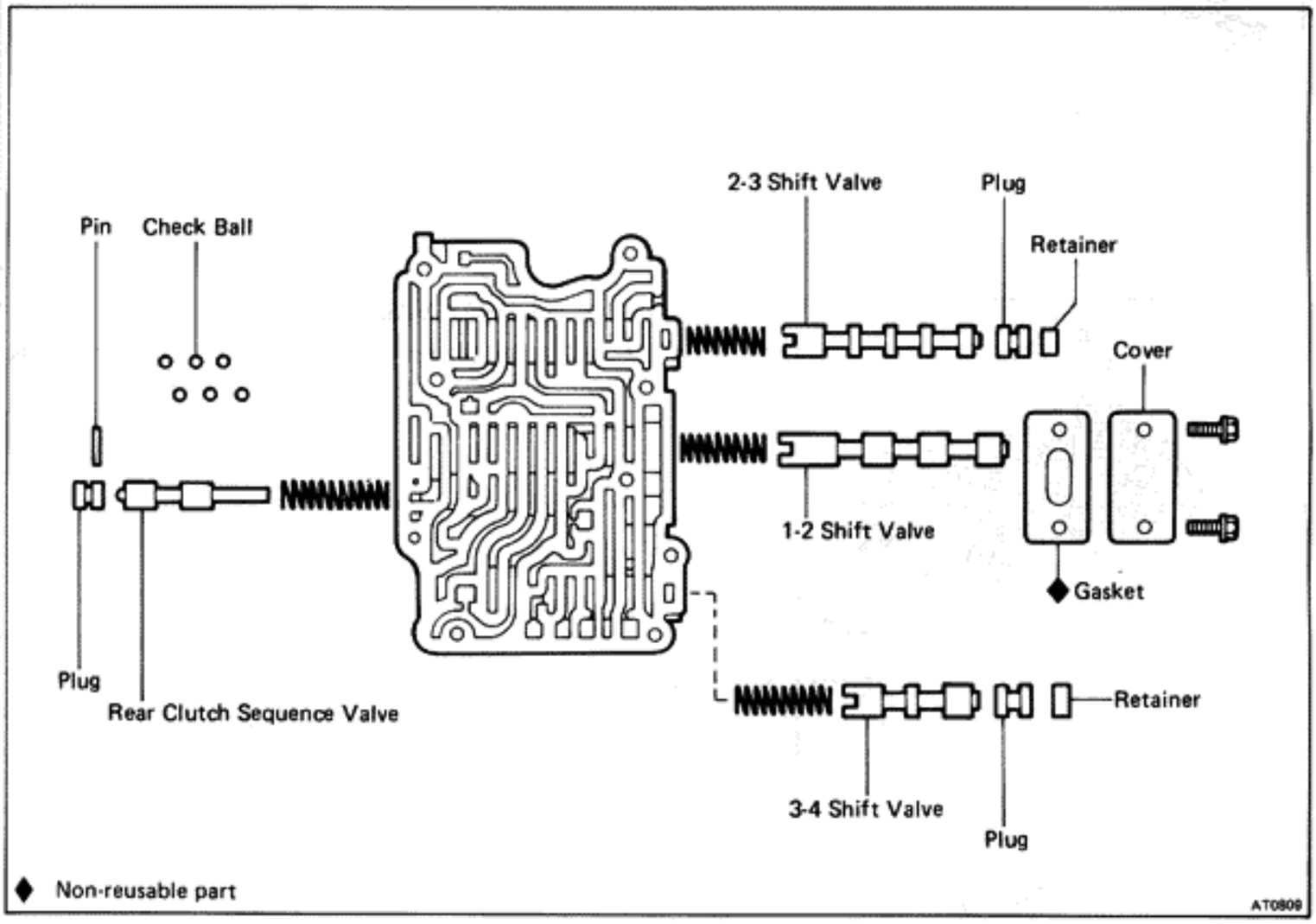

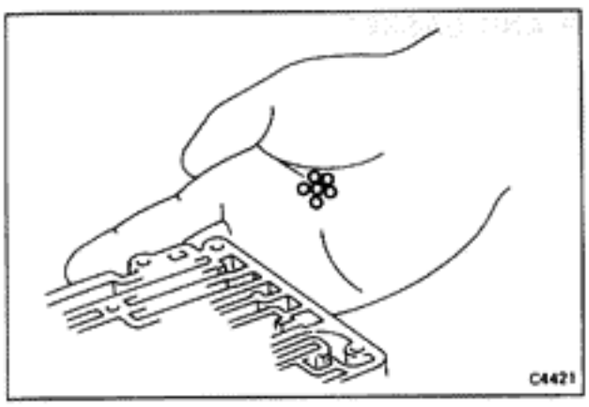

DISASSEMBLY OF UPPER REAR VALVE BODY

1. REMOVE SIX CHECK BALLS

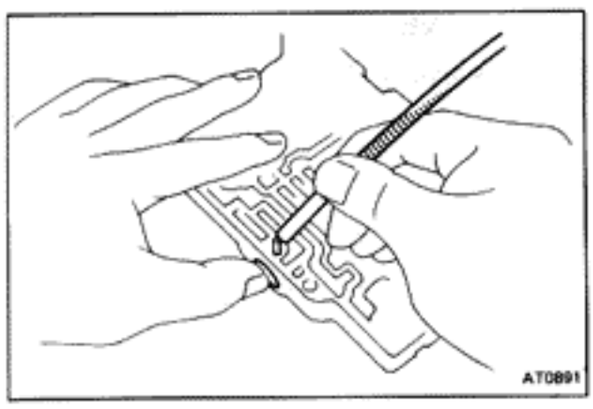

2. REMOVE REAR CLUTCH SEQUENCE VALVE

(a) Remove the pin with a magnetic finger by pushing on the plug. Then remove the plug.

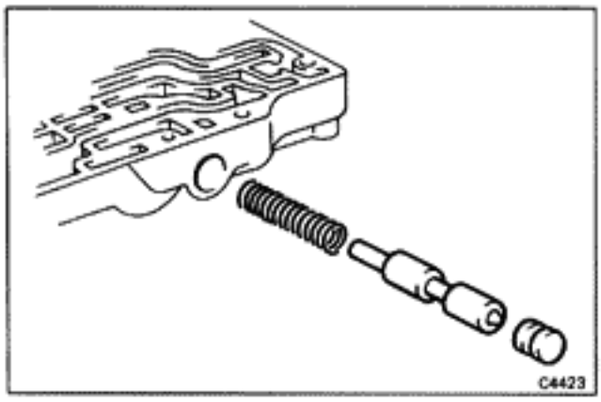

(b) Remove the rear clutch sequence valve and spring.

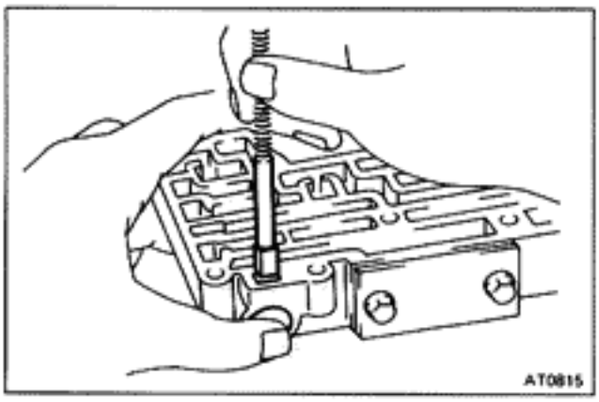

3. REMOVE 3-4 SHIFT VALVE

(a) Push the plug, remove the retainer with a magnetic finger.

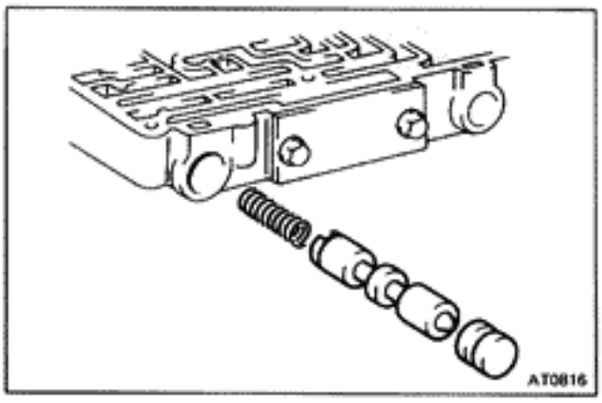

(b) Remove the plug, valve and spring.

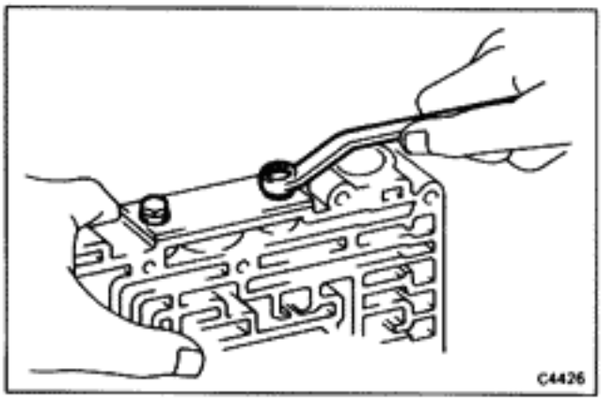

4. REMOVE COVER AND GASKET

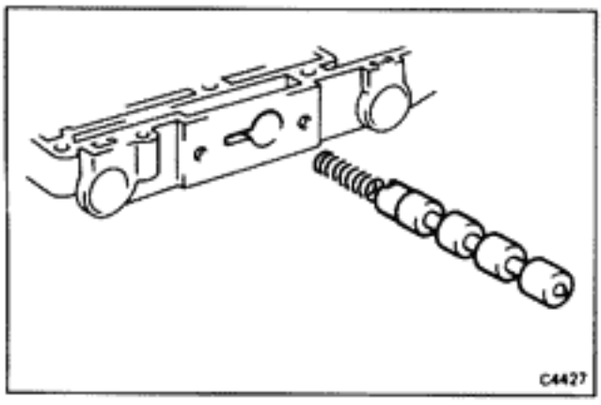

5. REMOVE 1-2 SHIFT VALVE

Remove the 1-2 shift valve and spring.

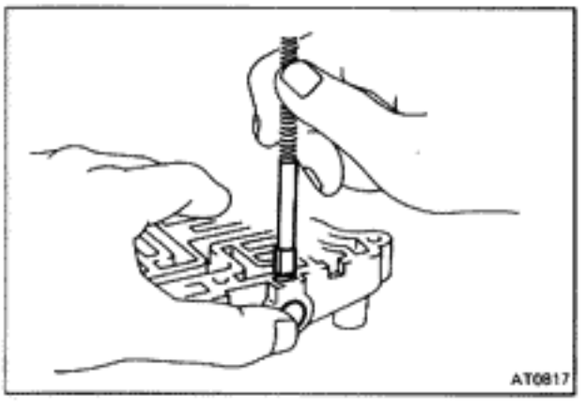

6. REMOVE 2-3 SHIFT VALVE

(a) Push the plug, remove the retainer with a magnetic finger.

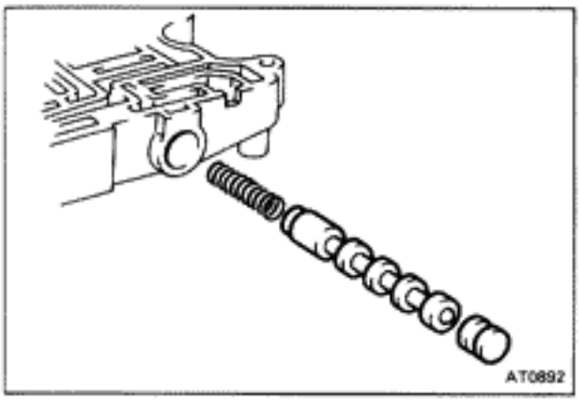

(b) Remove the plug, 2-3 shift valve and spring.

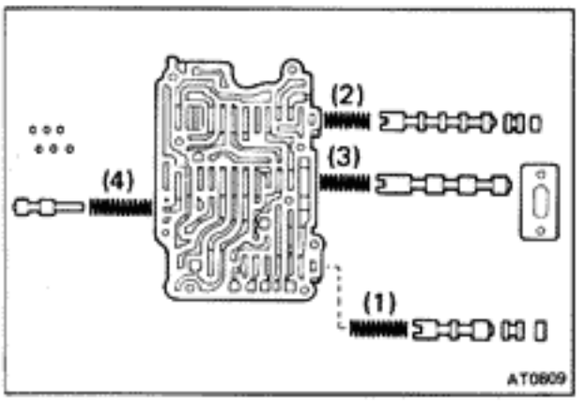

INSPECTION OF UPPER REAR VALVE BODY

INSPECT VALVE SPRINGS

Check for damage, squareness, rust and collapsed coils. Measure the spring free height and replace if less than that shown below.

Spring	Free height mm (in.)	Color
(1) 3-4 Shift valve	29.15 (1.1476)	Blue
(2) 2-3 Shift valve	29.15 (1.1476)	Blue
(3) 1-2 Shift valve	29.15 (1.1476)	Blue
(4) Rear clutch sequence valve	37.55 (1.4783)	None

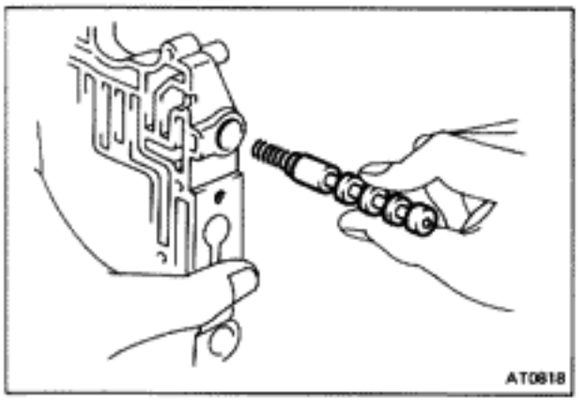

ASSEMBLY OF UPPER REAR VALVE BODY

(See page AT-97)

1. INSTALL 3-4 SHIFT VALVE

(a) Install the 3-4 shift valve and spring.

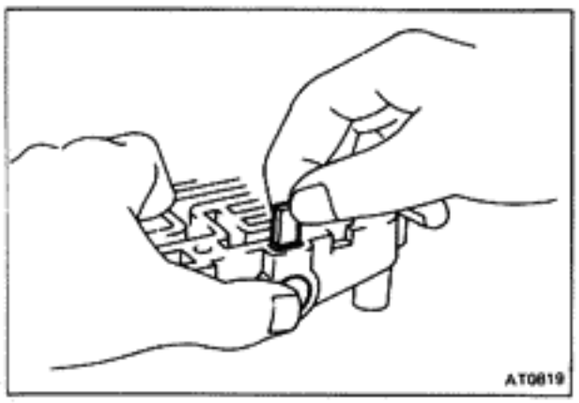

(b) Install the plug into the bore. Coat the retainer with petroleum jelly and install it.

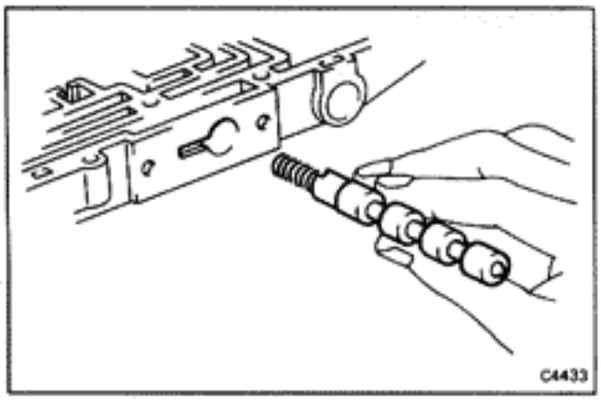

2. INSTALL 1-2 SHIFT VALVE

(a) Install the 1-2 shift valve and spring.

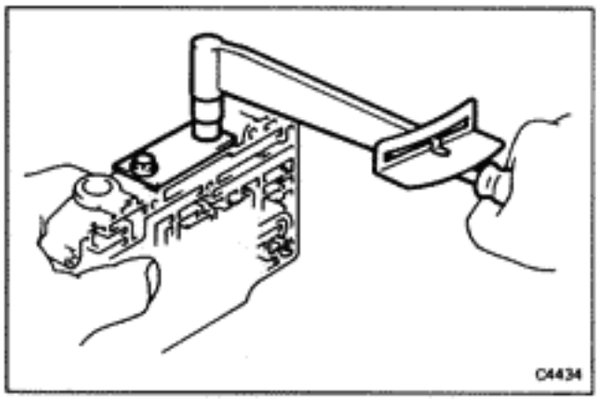

(b) Install the plate over the gasket.

Torque: 55 kg-cm (48 in.-lb, 5.4 N·m)

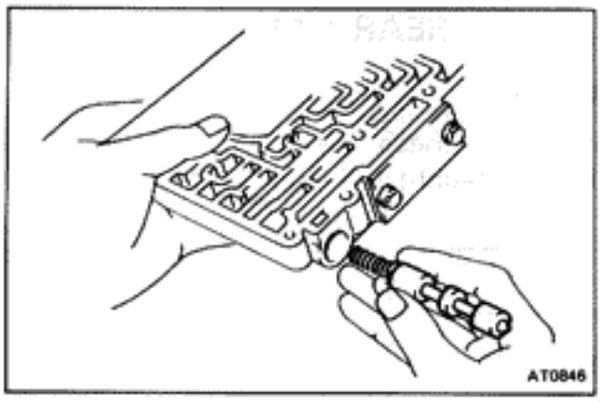

3. INSTALL 2-3 SHIFT VALVE

(a) Install the 2-3 shift valve and spring.

(b) Install the plug into the bore.

(c) Coat the retainer with petroleum jelly and install it.

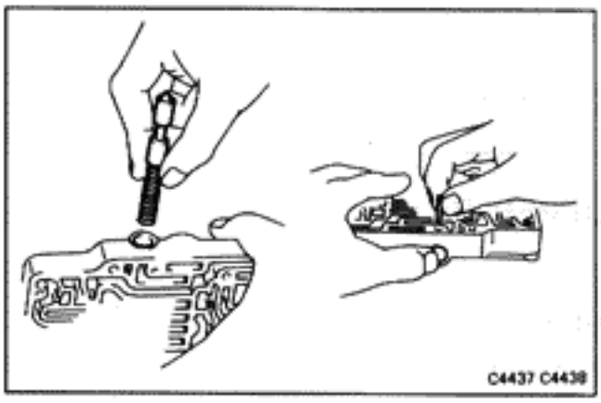

4. INSERT REAR CLUTCH SEQUENCE VALVE

(a) Install the valve spring, and the valve.

(b) Install the plug into the bore.

(c) Coat the pin with petroleum jelly and install it.

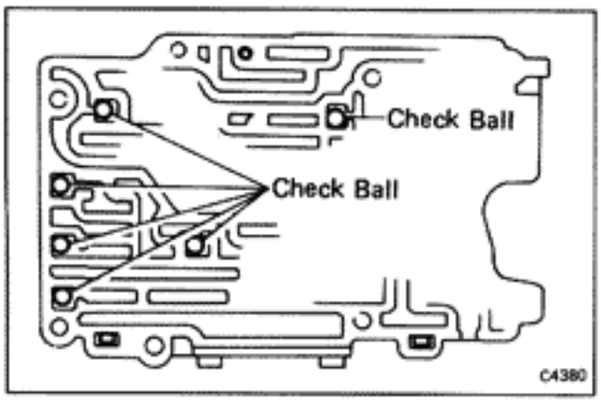

5. INSTALL CHECK BALLS AS SHOWN

Install the six steel balls in the position shown in the figure.

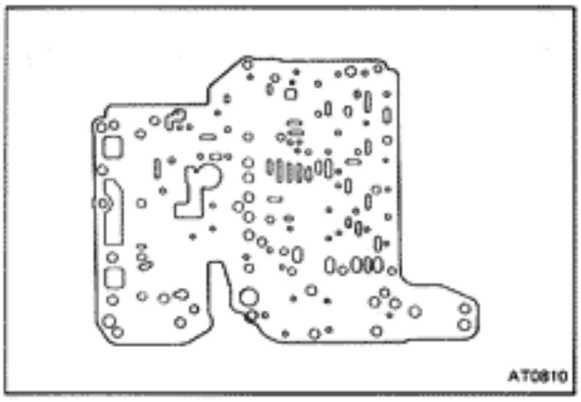

(Assembly of Valve Body)

1. POSITION NEW GASKET ON UPPER REAR VALVE BODY

Align a new gasket at each bolt hole.

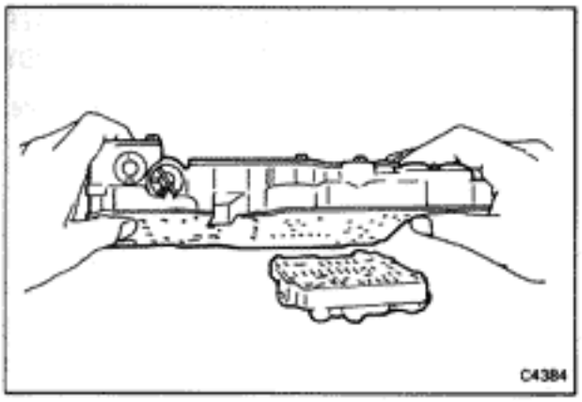

2. PLACE LOWER VALVE BODY WITH PLATE GASKET ON TOP OF UPPER REAR VALVE BODY

Align each bolt hole in the valve body and gasket.

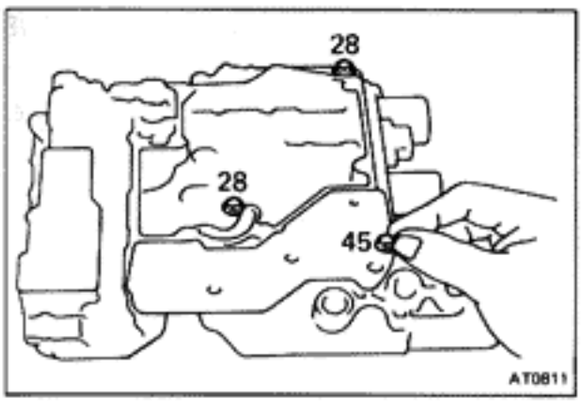

3. INSTALL AND FINGER TIGHTEN THREE BOLTS IN LOWER VALVE BODY TO SECURE UPPER REAR VALVE BODY

NOTE: Each bolt length (mm) is indicated in the figure.

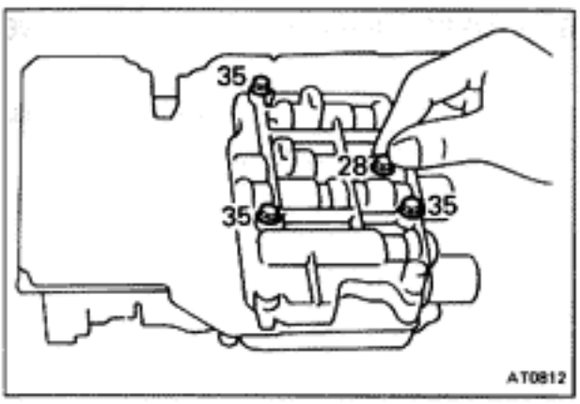

4. TURN ASSEMBLY OVER, CHECK GASKET ALIGNMENT AND FINGER TIGHTEN FOUR BOLTS IN UPPER REAR VALVE BODY

NOTE: Each bolt length (mm) is indicated in the figure.

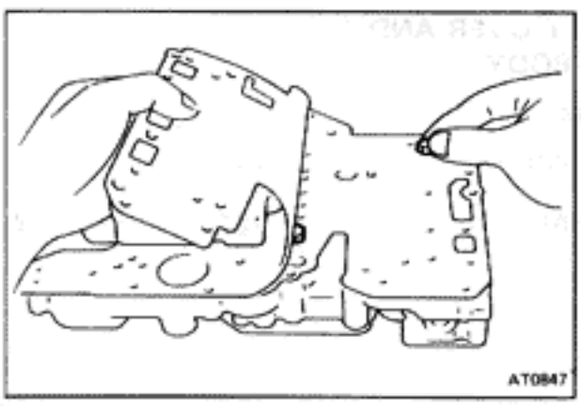

5. REMOVE TEMPORARY BOLTS FROM PLATE

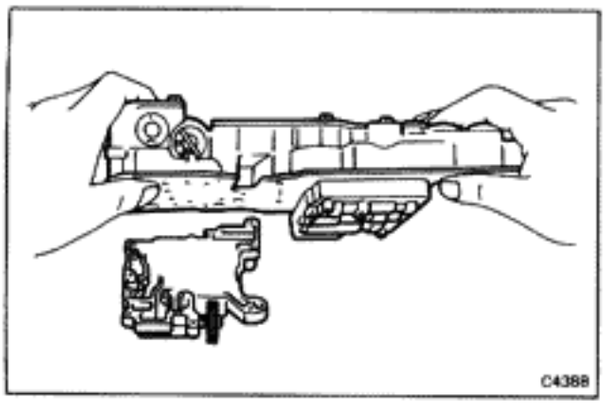

6. **PLACE LOWER AND UPPER REAR VALVE BODY ASSEMBLY ON TOP OF UPPER FRONT VALVE BODY**

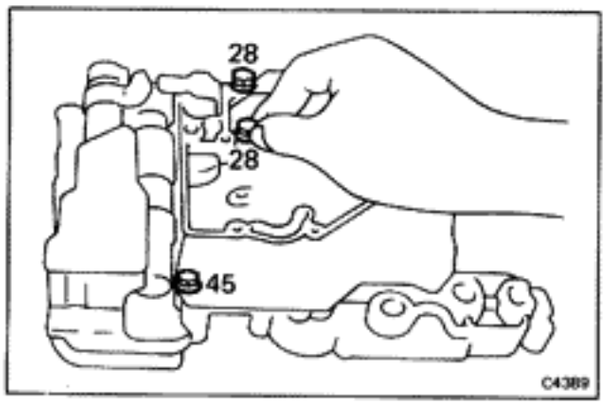

7. **INSTALL AND FINGER TIGHTEN SET BOLTS IN LOWER VALVE BODY TO SECURE UPPER FRONT VALVE BODY**

NOTE: Each bolt length (mm) is indicated in the figure.

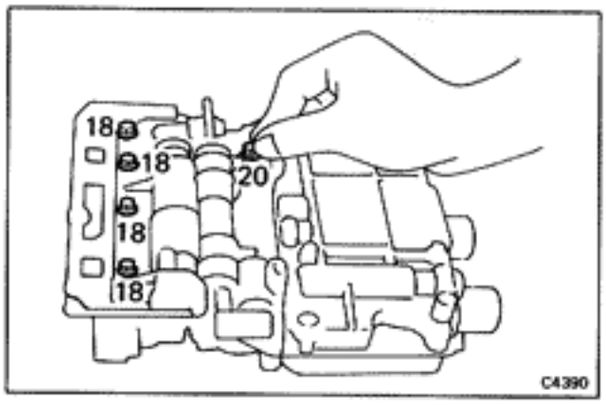

8. **TURN ASSEMBLY OVER AND FINGER TIGHTEN FIVE BOLTS IN UPPER FRONT VALVE BODY**

NOTE: Each bolt length (mm) is indicated in the figure.

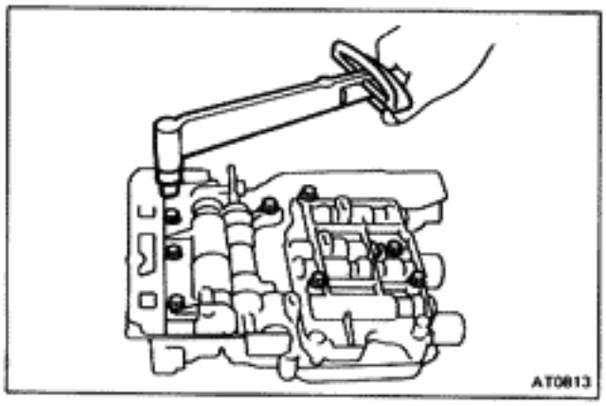

9. **TIGHTEN BOLTS IN UPPER FRONT AND REAR VALVE BODIES**

Recheck the alignment of the gaskets. Tighten the bolts.

Torque: 55 kg-cm (48 in.-lb, 5.4 N·m)

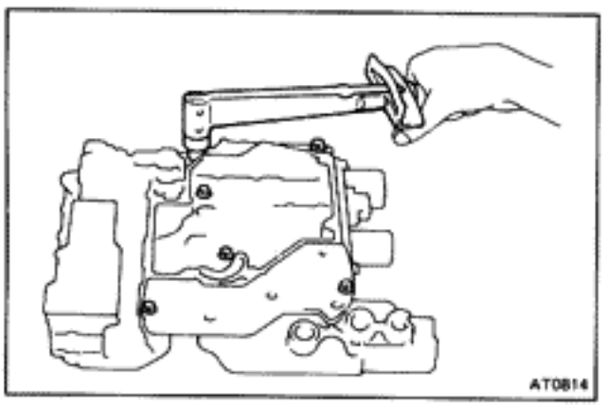

10. **TURN ASSEMBLY OVER AND TIGHTEN BOLTS IN LOWER VALVE BODY**

Tighten the bolts.

Torque: 55 kg-cm (48 in.-lb, 5.4 N·m)

11. **INSTALL MANUAL VALVE INTO LOWER VALVE BODY**

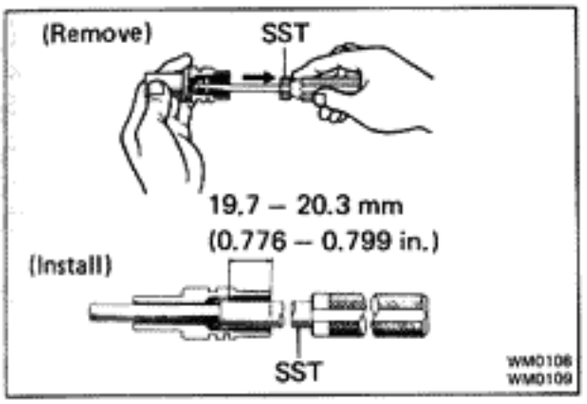

Extension Housing

INSPECTION OF SPEEDOMETER GEAR AND EXTENSION HOUSING

1. **IF NECESSARY, REPLACE SPEEDOMETER GEAR OIL SEAL**

   (a) Using SST, remove the oil seal.

   SST 09921-00010

   (b) Using SST, install the new oil seal.

   SST 09201-60011

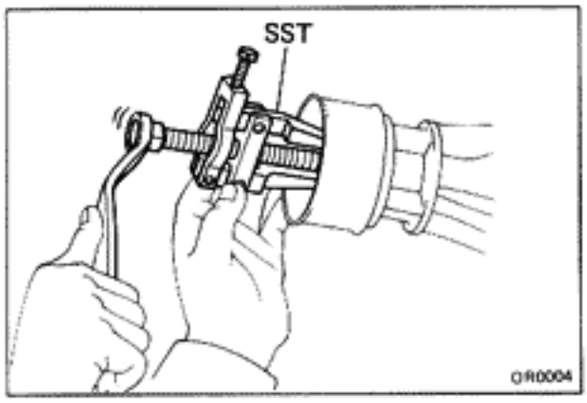

2. **IF NECESSARY, REPLACE OIL SEAL AND DUST SEAL**

   (a) Using SST, remove the oil seal.

   SST 09308-10010

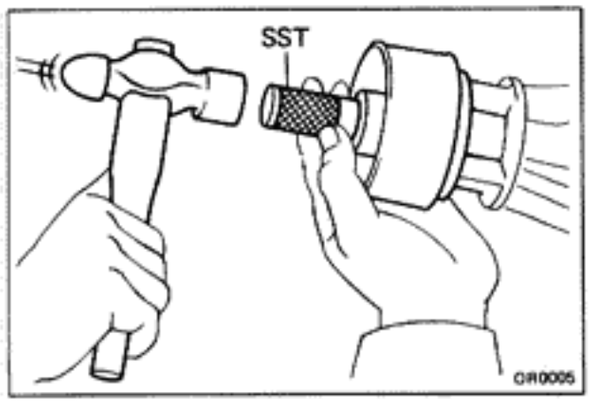

   (b) Using SST, drive in a new oil seal and dust seal.

   SST 09325-20010

Torque Converter

CLEAN TORQUE CONVERTER

If the transmission is contaminated, the torque converter and transmission cooler should be thoroughly flushed, using Toyota Transmission Cleaner.

INSPECTION OF TORQUE CONVERTER

1. **INSERT SST IN END OF TORQUE CONVERTER**

   (a) Insert a turning tool in the inner race of the one-way clutch.

   (b) Install the stopper so that it fits in the notch of the converter hub and other race of the one-way clutch.

   SST 09350-20013 (09397-22020)

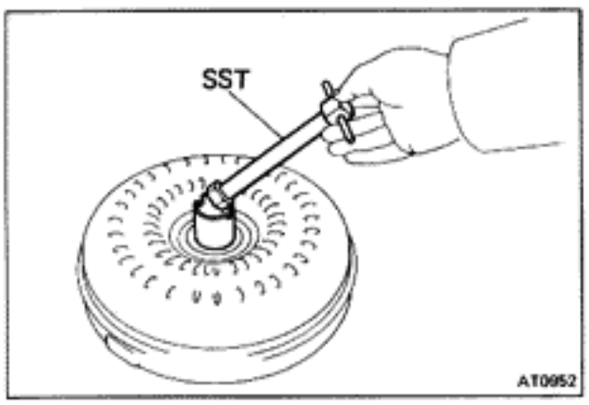

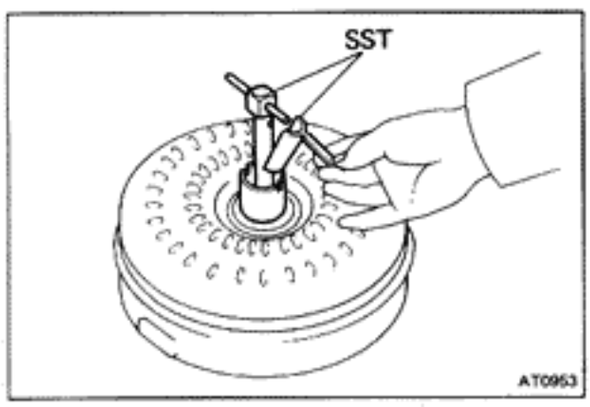

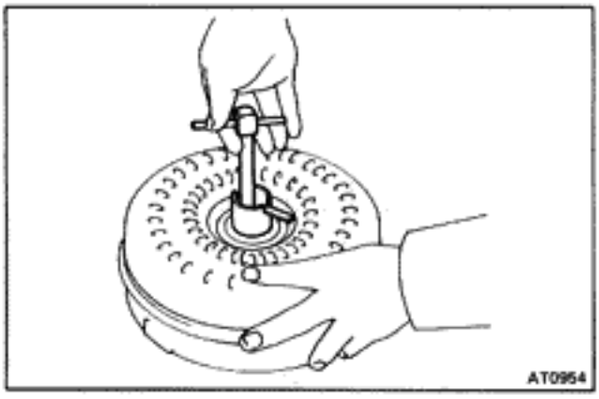

2. TEST ONE-WAY CLUTCH

The clutch should lock when turned counterclockwise, and should rotate freely and smoothly clockwise. Less than 25 kg-cm (22 in.-lb, 2.5 N·m) of torque should be required to rotate the clutch clockwise. If necessary, clean the converter and retest the clutch. Replace the converter if the clutch still fails the test.

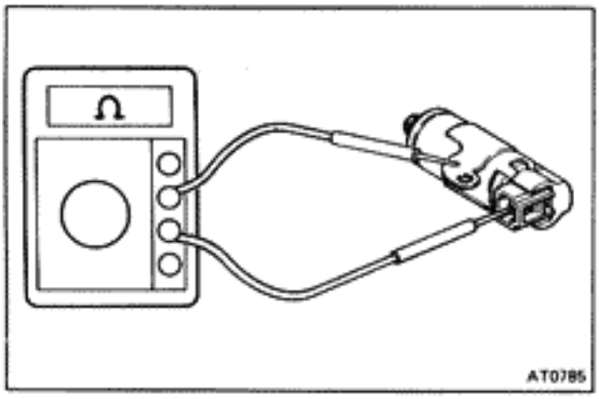

Electrical Parts

1. INSPECT SOLENOID

Check the resistance between the terminal and body.

Standard resistance: 11 – 15 Ω

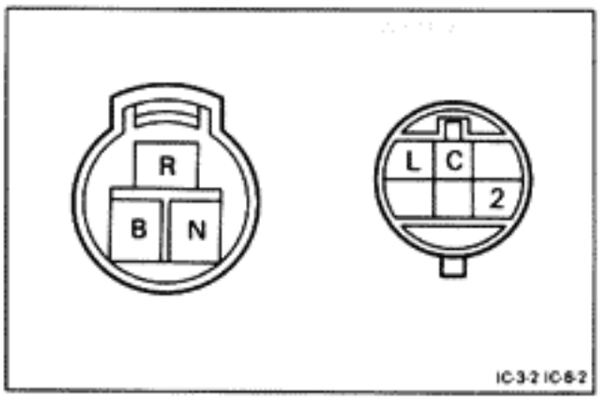

2. INSPECT NEUTRAL START SWITCH

Using an ohmmeter, check the continuity of the terminals for each switch position shown in the table below.

If continuity between the terminals is not as specified, replace the switch.

Terminal / Range	B	N	C	R	2	L
P	○—○					
R			○—○			
N	○—○					
2			○		○	
L			○			○

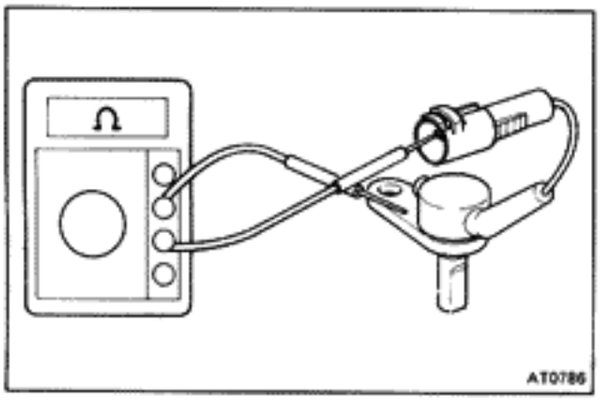

3. INSPECT SPEED SENSOR

Connect on ohmmeter to the speed sensor and check that the meter deflects when the sensor is repeatedly brought close to the rotor sensor magnet and removed from it.

ASSEMBLY OF TRANSMISSION

Disassembly, inspection and assembly of each component group have been indicated in the preceding chapter. This chapter deals with assembly of A43DE transmission.

Before assembly, make sure again that all component groups are assembled correctly. If something wrong is found in a certain component group during assembly, inspect and repair this group immediately.

GENERAL ASSEMBLY NOTE:

1. The automatic transmission is composed of highly precision-finished parts, necessitating careful inspection before assembly because even a small nick could cause fluid leakage or affect performance.
2. Do not use adhesive cements on gaskets and similar parts.
3. Before assembling new clutch discs, soak them in automatic transmission fluid for at least two hours.
4. When assembling the transmission, be sure to use new gaskets and O-rings.
5. Apply automatic transmission fluid on sliding or rotating surfaces of the parts before assembly.
6. Dry all parts by blowing with compressed air. Never use shop rags.
7. Use petroleum jelly to keep the small parts in their places.
8. Be sure to install the thrust bearings and races in the correct direction and position.

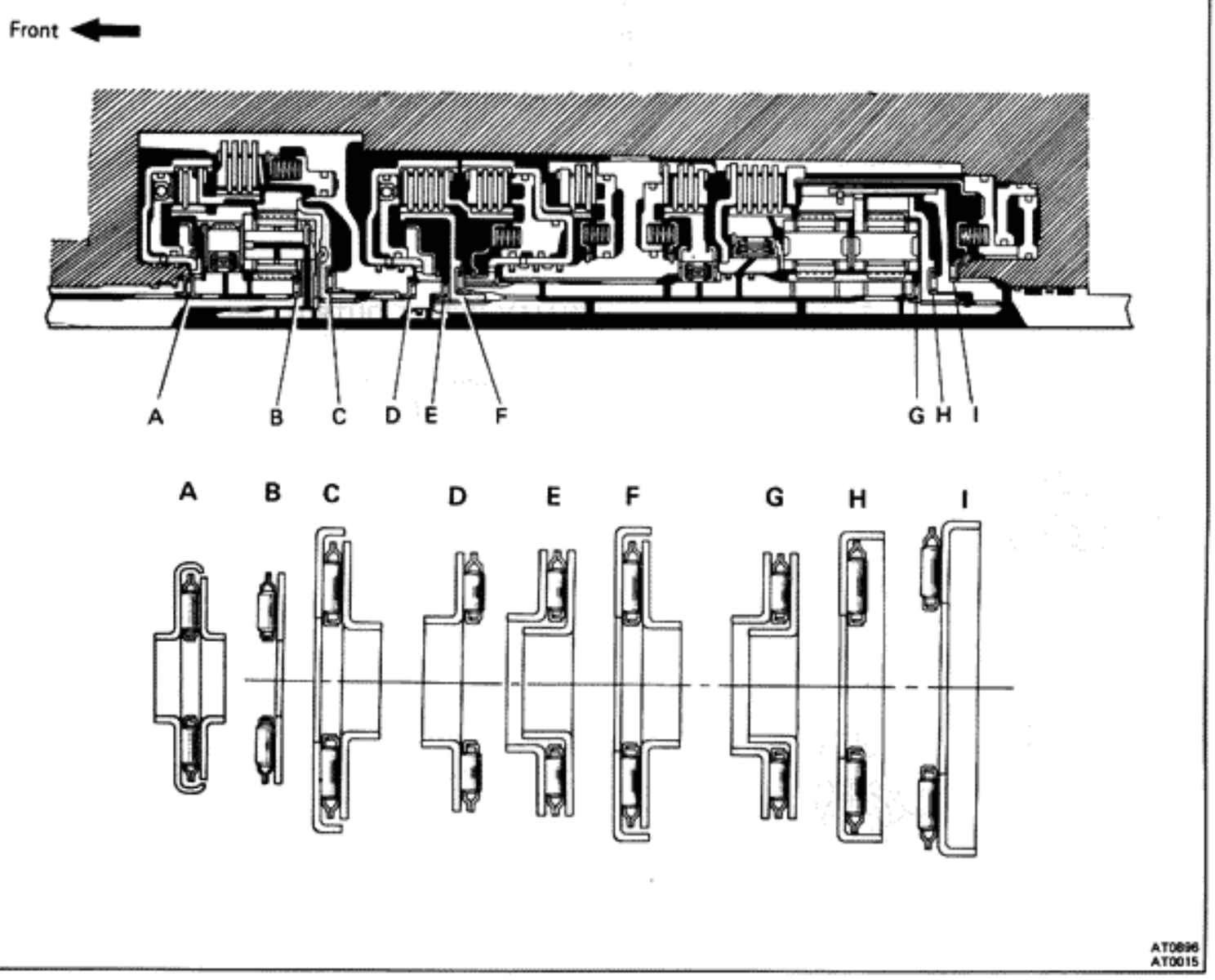

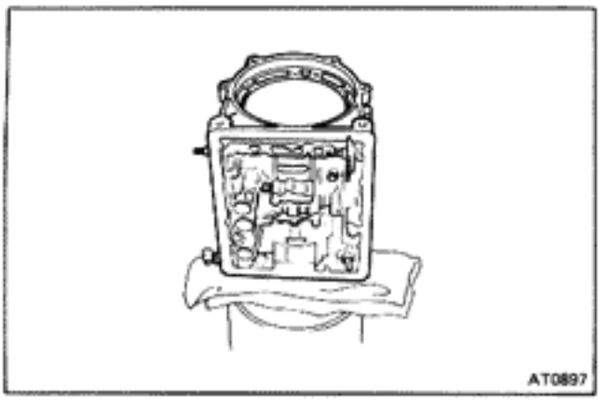

1. PLACE TRANSMISSION CASE ON CYLINDER

Place the transmission on a cylindrical stand for more efficient work.

CAUTION: Place shop rags between the case and stand to avoid damaging the case.

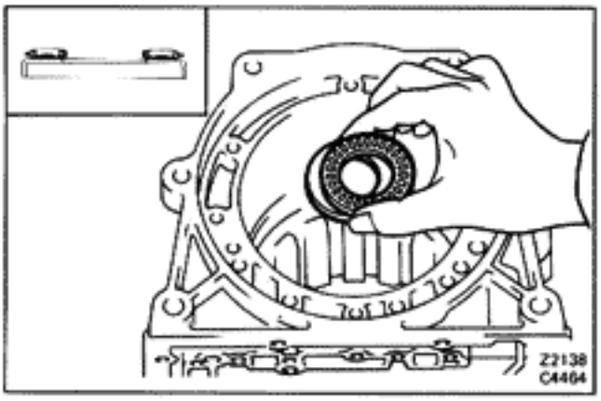

2. INSTALL THRUST WASHER AND BEARING

Install the thrust washer, facing the cup side downward.

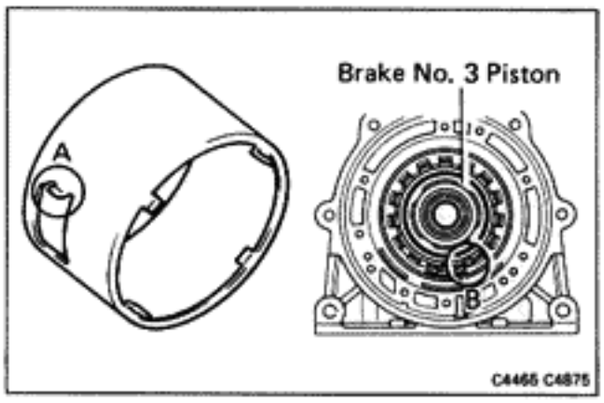

3. INSTALL APPLY TUBE IN CASE

Install the tube aligning its locking tab (part A) with part B of the case.

NOTE: Make sure that the lips of the tube end are completely inserted onto the outer piston.

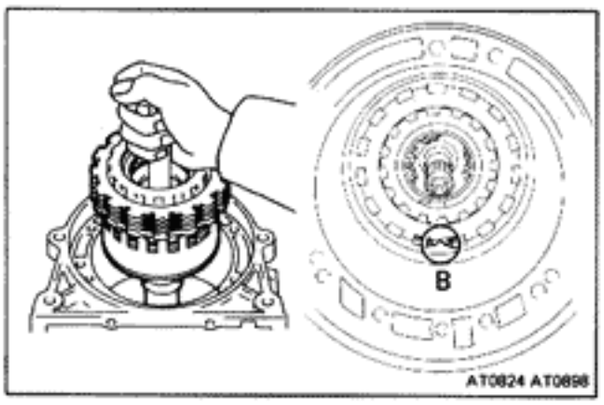

4. PARTIALLY INSERT OUTPUT SHAFT ASSEMBLY INTO CASE

Align the opening notch (part A) of the clutch plates with the slot (part B) of the case.

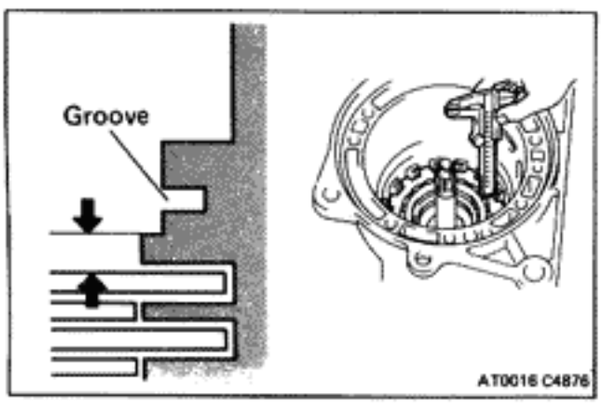

5. CHECK CLUTCH PACK CLEARANCE

With the case in upright position, make sure that the clutch pack is lower than the ledge below the snap ring groove.

If the clutch pack is not lower than the ledge, components may be misassembled or there may be excess ATF on the discs.

Standard clearance: 0.61 — 2.64 mm (0.0240 — 0.1039 in.)

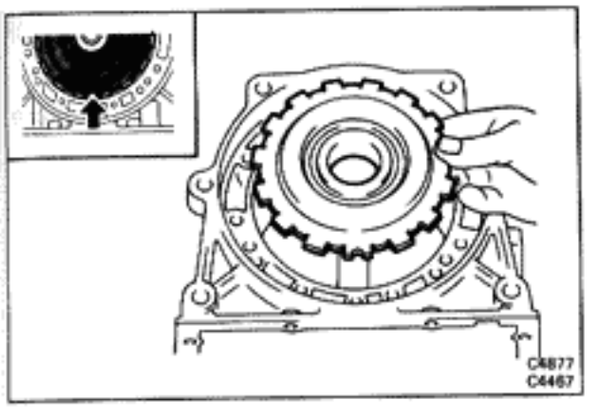

6. INSTALL REACTION PLATE

Position the notched tooth of the reaction plate toward the valve body side of the case. Push it into place.

NOTE: The reaction plate is correctly installed if the snap ring groove is fully visible.

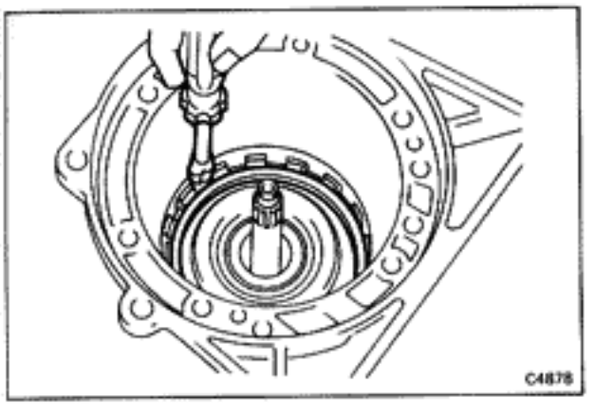

7. INSTALL SNAP RING

Use a large screwdriver to compress the snap ring. Push it into place by hand. Work around the case. Visually check to make sure that the ring is fully seated. Make sure that the ends of the snap ring are between the lugs.

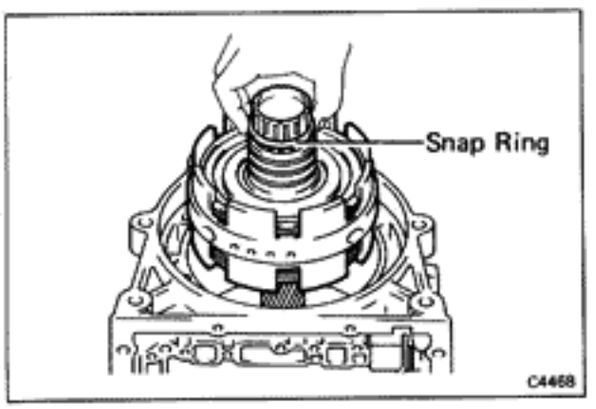

8. PUSH CENTER SUPPORT ASSEMBLY INTO CASE

Align the oil hole and bolt hole of the center support with those of the body side and insert.

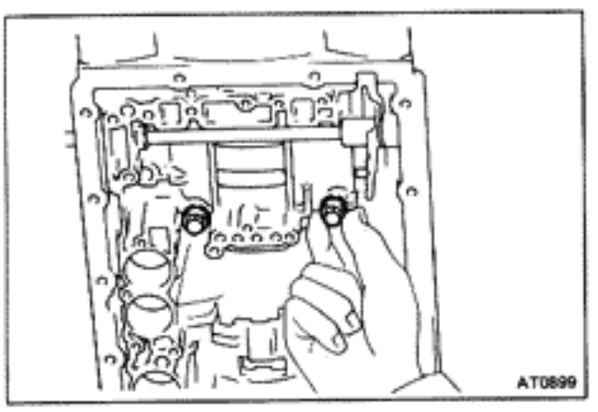

9. INSTALL TWO CENTER SUPPORT BOLTS WITH WAVE WASHERS

Align the center support with holes in the case and install the two bolts finger tight.

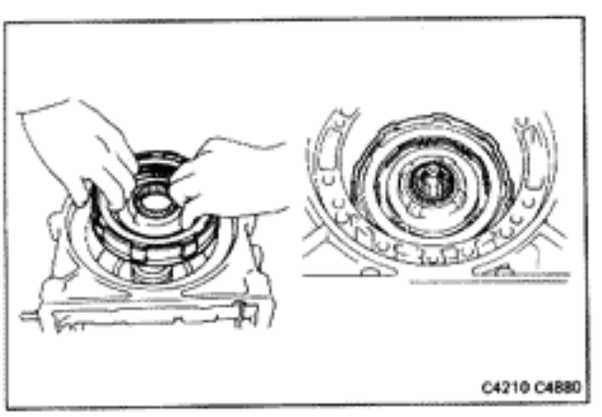

10. INSTALL REAR CLUTCH IN CASE

Rotate the clutch to mesh the hub with the center support.

11. CHECK FOR CORRECT INSTALLATION OF REAR CLUTCH

If the rear clutch is fully meshed with the center support, the splined center of the clutch will be flush with the end of the sun gear shaft.

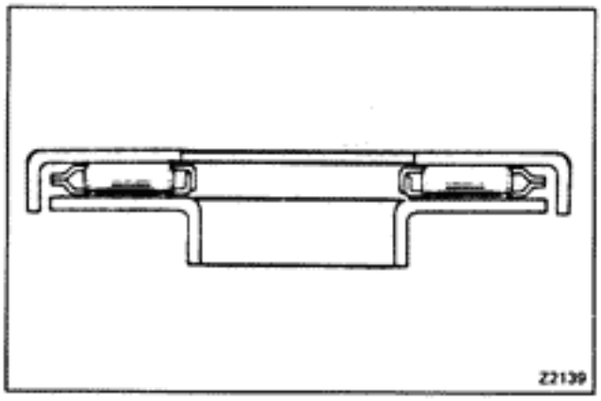

12. INSTALL NEEDLE BEARING RACE OVER SPLINED END OF REAR CLUTCH IN CASE

Coat the parts with petroleum jelly to keep them in place. Position the lip of the race toward the rear clutch.

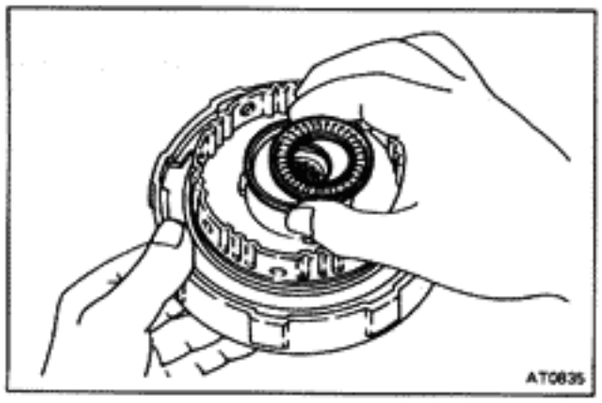

13. INSTALL THRUST BEARING AND RACE ON FRONT CLUTCH

Coat the parts with petroleum jelly to keep them in the place. Position the lip of the race outward.

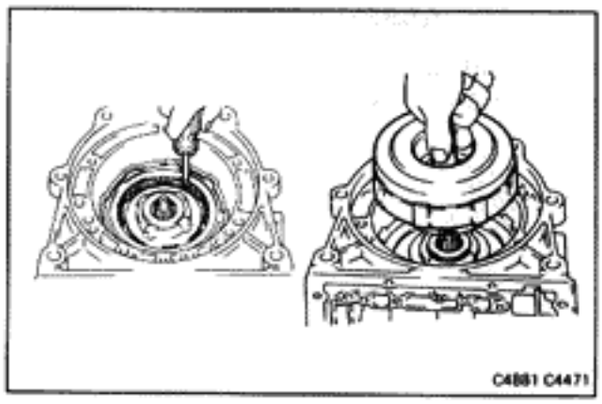

14. INSTALL FRONT CLUTCH ASSEMBLY IN CASE

Align the flukes of the rear clutch discs and mesh them with front clutch hub. Push the front clutch assembly into the case.

CAUTION: Be careful that the thrust bearing does not fall out.

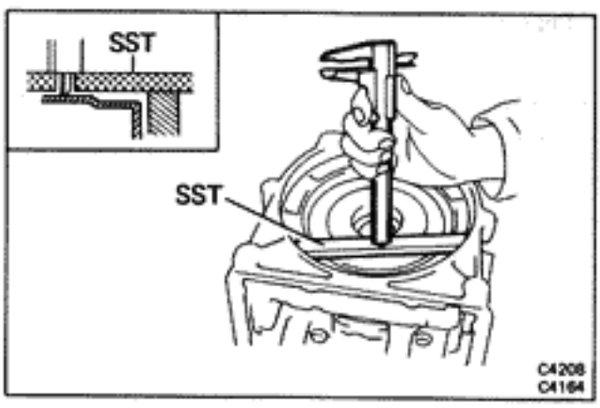

15. CHECK CORRECT INSTALLATION OF FRONT CLUTCH

Set SST on the transmission case as shown in the figure. Measure the distance between the top surface of the SST and front clutch assembly. If the distance corresponds to that during disassembly, the front clutch is installed correctly.

SST 09350-20013 (09370-12010)

Height: Measured value minus SST width = Approx. 2mm (0.08 in.)

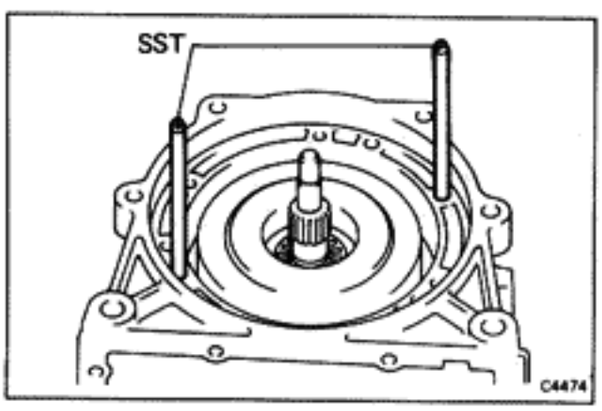

16. INSTALL THRUST BEARING ON FRONT CLUTCH

Coat the thrust bearing with petroleum jelly and set it into place.

17. INSTALL SST ON CASE

Finger tighten the SST on the transmission case.

SST 09350-20013 (09362-30011)

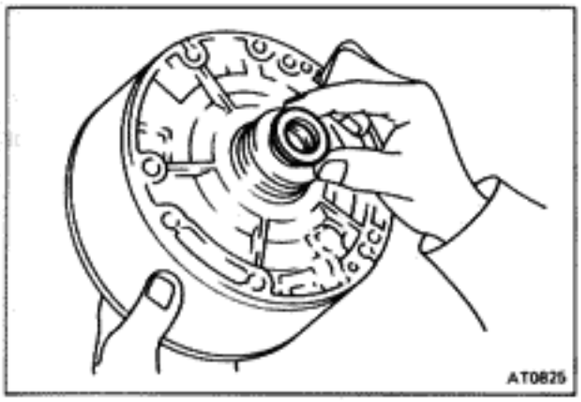

18. INSTALL THRUST WASHER ON OVERDRIVE CASE END

Coat the thrust washer with petroleum jelly and set it into place facing the lip side toward the overdrive case.

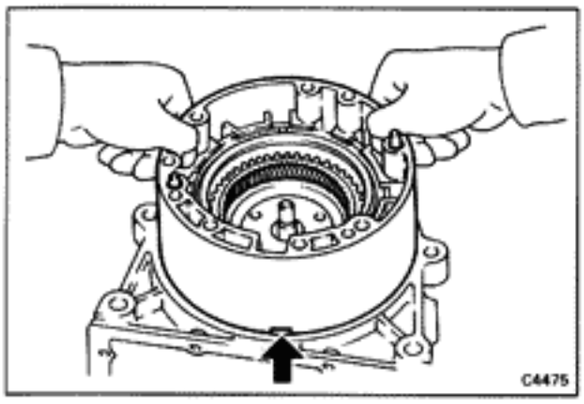

19. INSERT OVERDRIVE CASE INTO TRANSMISSION CASE

Insert the overdrive case gently through the two guide bolts (SST) with the circled part in the figure facing in the direction indicated.

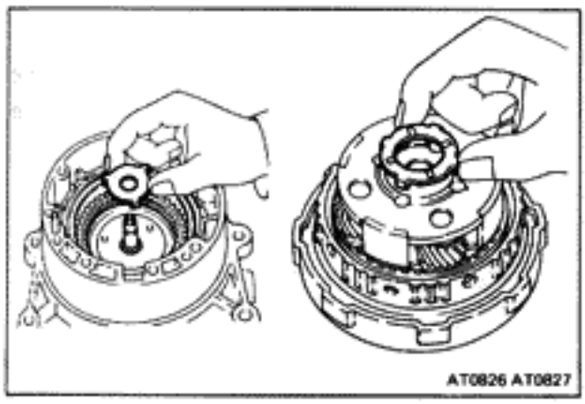

20. INSTALL TWO THRUST WASHERS

Coat the thrust washers with petroleum jelly. Install one thrust washer on the overdrive case and the other one on the overdrive clutch.

NOTE: The washer lugs should be inserted in the holes.

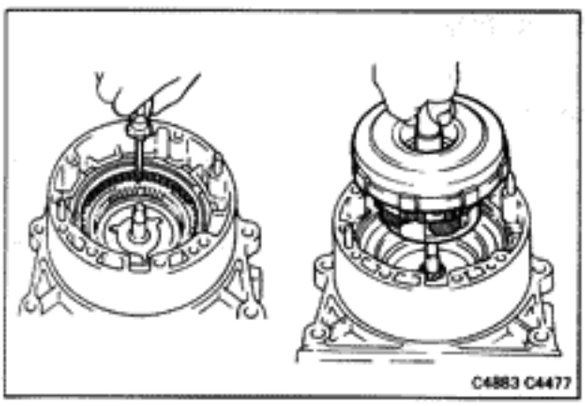

21. INSTALL OVERDRIVE CLUTCH IN CASE

Align the flukes of the discs in the overdrive case. Align the flukes with the slots of the overdrive clutch and press the overdrive clutch into the overdrive case.

CAUTION: Be careful that the thrust washer does not fall out.

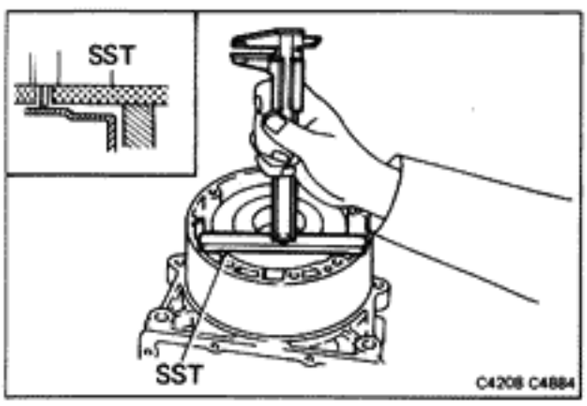

22. CHECK CORRECT INSTALLATION OF OVERDRIVE CLUTCH

Set SST on the overdrive case as shown in the figure. Measure the distance between the top surface of SST and the overdrive clutch. If the distance corresponds to that during disassembly, the overdrive clutch is installed correctly.

SST 09350-20013 (09370-12010)

Height: Measure value minus SST width = Approx. 3.5 mm (0.138 in.)

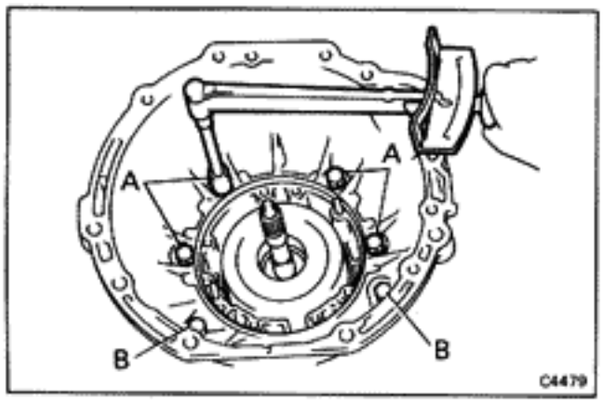

23. INSTALL O-RING ON OVERDRIVE CASE

24. INSTALL CONVERTER HOUSING

Install the two 12-mm bolts at B and four 10-mm bolts at A and tighten them.

Torque: A bolts 345 kg-cm (25 ft-lb, 34 N·m)
B bolts 580 kg-cm (42 ft-lb, 57 N·m)

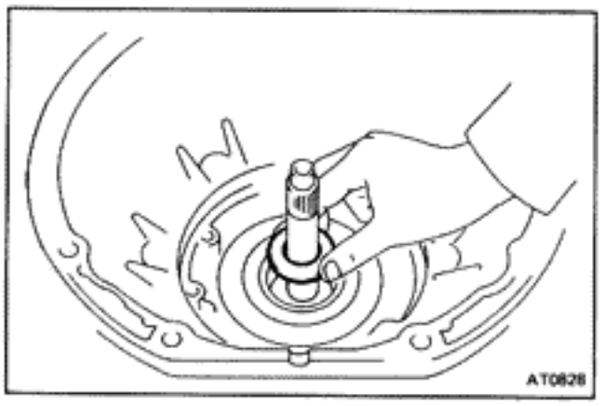

25. INSTALL RACE ON OVERDRIVE CLUTCH

Install the thrust washer, facing the lip side outward.

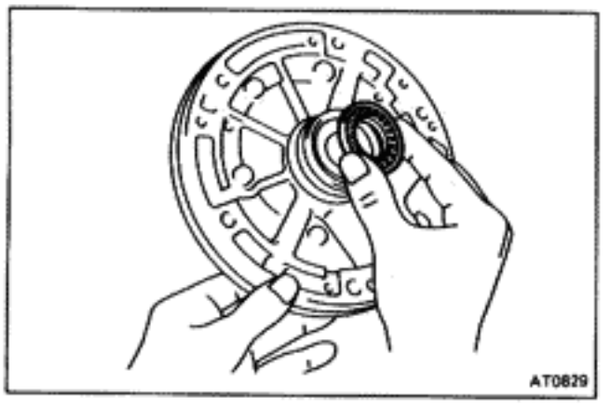

26. INSTALL THRUST BEARING ON FRONT OIL PUMP

Coat the thrust washer with petroleum jelly and install the washer side toward the pump body together with the bearing.

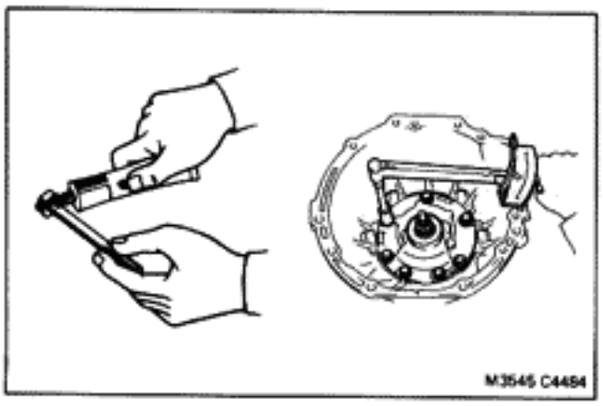

27. INSTALL FRONT OIL PUMP

(a) Install the oil pump gently through the two guide pins, being careful that the thrust washer does not fall out.

(b) Coat the five set bolts with seal packing and finger tighten them.

(c) Using a screwdriver, remove the SST, and install the two set bolts coated with seal packing.

SST 09350-20013 (09362-30011)

(d) Tighten the set bolts gradually and uniformly.

Torque: 215 kg-cm (16 ft-lb, 21 N·m)

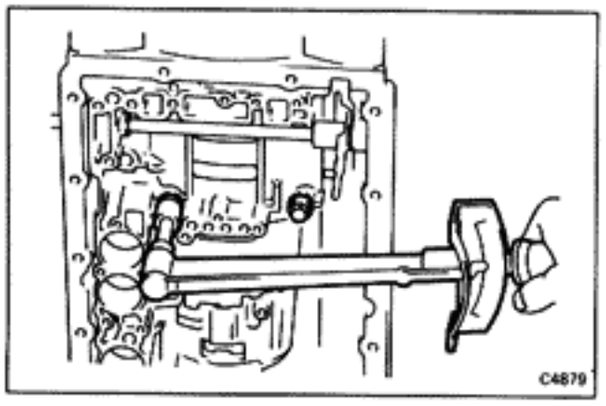

28. TIGHTEN TWO CENTER SUPPORT BOLTS

Tighten the bolts alternately in 70 kg-cm (61 in.-lb, 6.9 N·m) increments.

Torque: 260 kg-cm (19 ft-lb, 25 N·m)

NOTE: First tigten the accumulator side bolt.

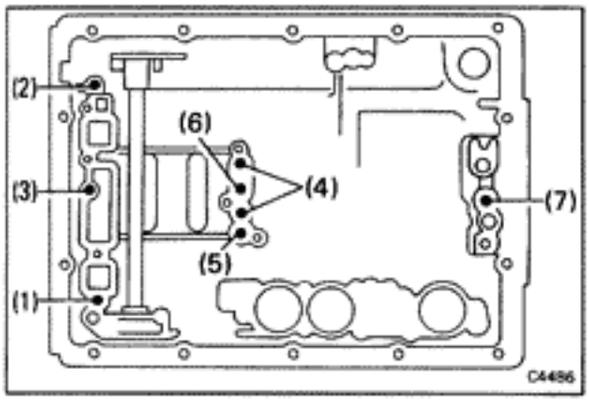

29. CHECK OPERATION OF PISTONS

Blow low-pressure compressed air into the passages indicated on the figure and listen for noise from piston movement.

(1) Overdrive clutch
(2) Overdrive brake
(3) Front clutch
(4) Rear clutch
(5) Brake No. 1
(6) Brake No. 2
(7) Brake No. 3

If pistons do not move, disassemble and inspect.

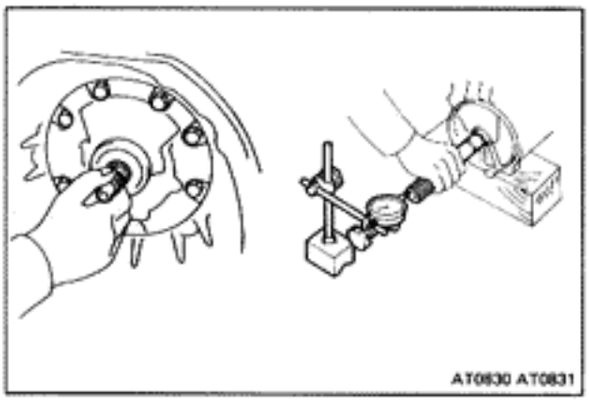

30. CHECK INPUT SHAFT AND OUTPUT SHAFT

(a) Make sure that the input shaft has play in axial direction and that it turns.

(b) Make sure that the output shaft has thrust play in axial direction.

Thrust play: 0.3 — 0.9 mm (0.012 — 0.035 in.)

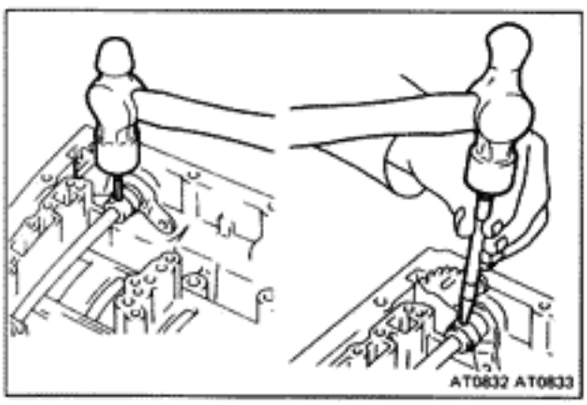

31. IF NECESSARY, INSTALL MANUAL VALVE LEVER SHAFT INTO CASE

(a) Assemble a new collar to the manual valve lever.

NOTE: Always replace the collar with a new one.

(b) Install the manual valve lever shaft to the transmission case through the manual valve lever.

(c) Drive in the roll pin with the slot at right angle to the shaft.

(d) Match the collar hole to the lever staking hollow and stake the collar to the lever.

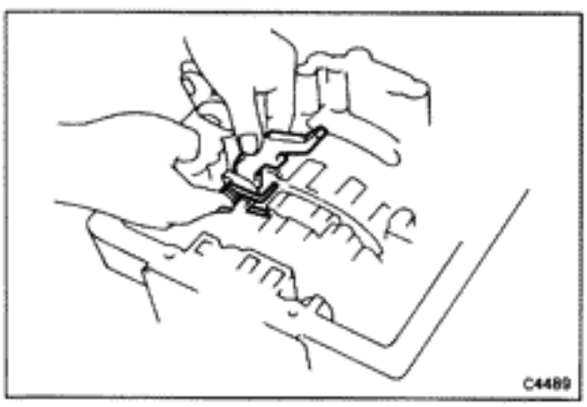

32. INSTALL PARKING LOCK PAWL, PIVOT PIN AND SPRING IN CASE

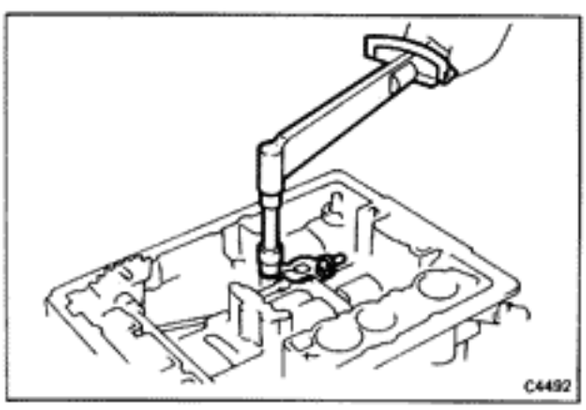

33. INSTALL PARKING LOCK PAWL BRACKET ON CASE

Make sure the collar on the control rod is facing toward the front of the transmission.
Tighten the two bolts. Make sure the pawl moves freely.

NOTE: It is possible for the bracket to be installed too far forward, where it will bind the pawl.

Torque: 75 kg-cm (65 in.-lb, 7.4 N·m)

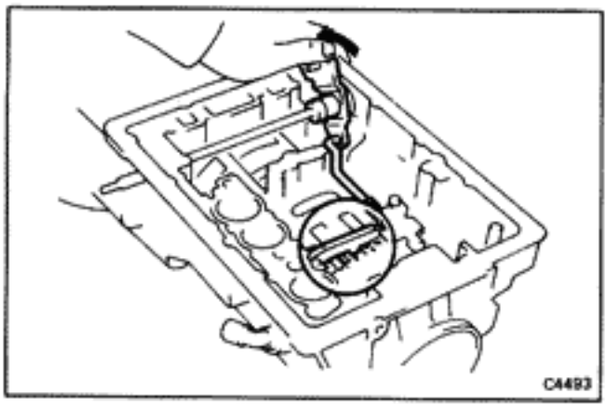

34. CHECK OPERATION OF PARKING LOCK PAWL

Make sure the planetary gear output shaft is locked when the manual valve lever is in "P" range.

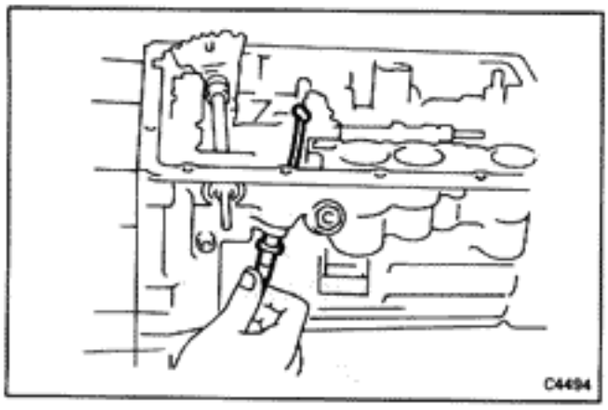

35. INSTALL NEW O-RING ON THROTTLE CABLE FITTING

36. INSTALL THROTTLE CABLE IN CASE

Push the cable through the case, being careful not to damage the O-ring. Check for full seating.

CAUTION: In subsequent work, be careful not to roll the case over the cable and break the cable fitting.

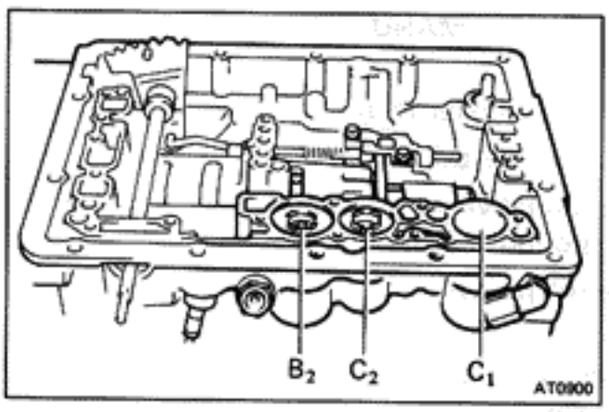

37. INSTALL ACCUMULATOR PISTON AND SPRINGS

mm (in.)

Spring		Free length	Outer diameter	Wire diameter	Color
B_2	Upper	50.68 (1.9953)	20.00 (0.7874)	2.80 (0.1102)	Light Gray
	Lower	35.13 (1.3831)	16.16 (0.6362)	1.30 (0.0512)	Red
C_2	Upper	43.56 (1.7150)	14.30 (0.5630)	1.80 (0.0709)	Blue
	Lower	32.73 (1.2886)	14.80 (0.5827)	1.30 (0.0512)	Green
C_1		64.68 (2.5465)	17.50 (0.6890)	2.00 (0.0787)	None

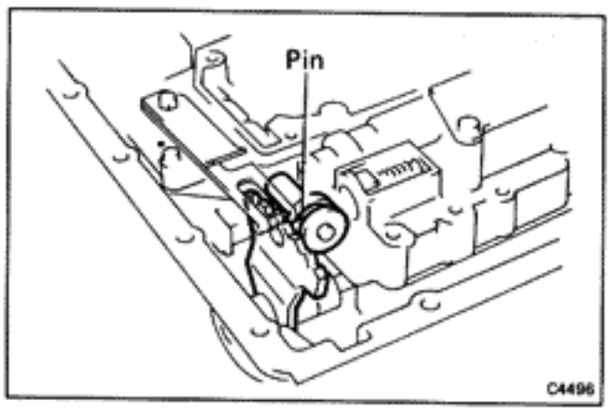

38. PLACE VALVE BODY ON TRANSMISSION

Make sure the accumulator pistons are pressed fully into the bore. Align the manual valve with the pin on the manual shift lever, and lower valve body into place.

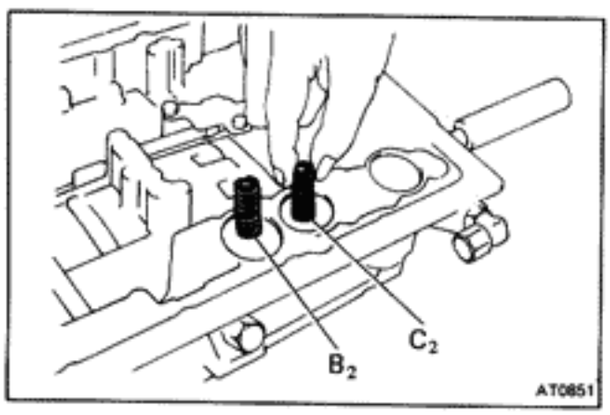

39. LIFT SIDE OF VALVE BODY AND ATTACH THROTTLE CABLE

(a) While holding the cam down with your fingers, slip the cable end into the slot.

(b) Make sure that the B_2 and C_2 accumulator piston springs is installed onto the piston.

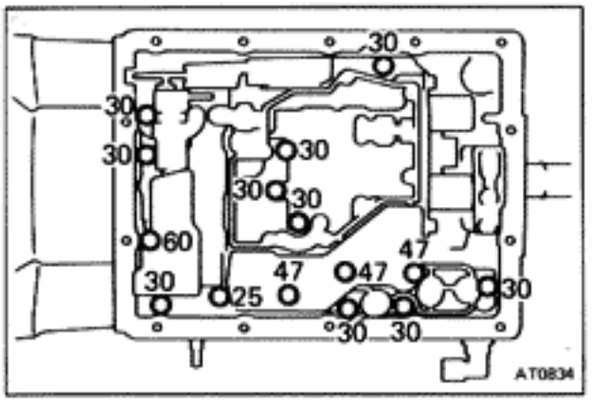

40. INSTALL FIFTEEN BOLTS IN VALVE BODY

Install the bolts as shown.

Torque: 100 kg-cm (7 ft-lb, 10 N·m)

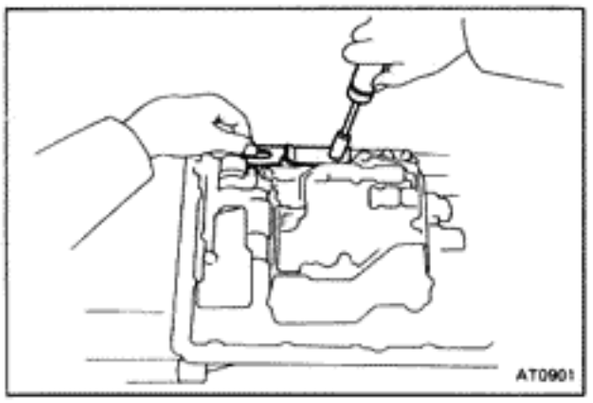

41. INSTALL DETENT SPRING

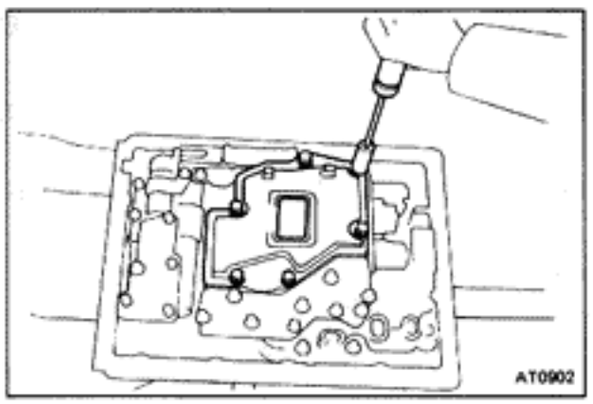

42. INSTALL OIL STRAINER

Torque: 55 kg-cm (48 in.-lb, 5.4 N·m)

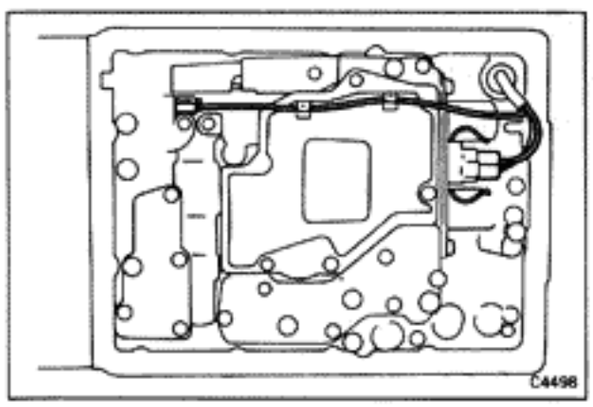

43. CONNECT SOLENOID WIRING TO EACH SOLENOID

(a) Push the solenoid wiring through in the transmission case and connect the terminals to each solenoid.

(b) Clamp the wiring to the oil screen.

(c) Install the gromet for the wiring with the plate.

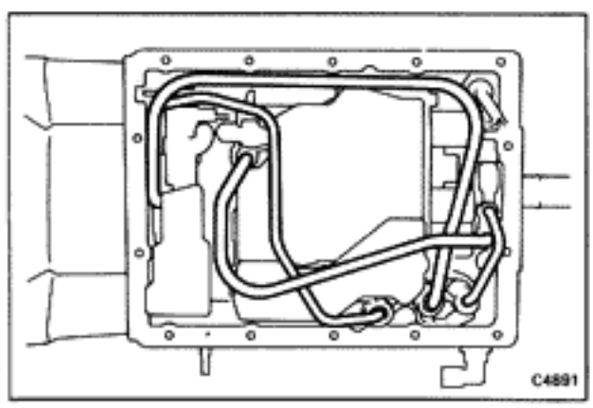

44. INSTALL OIL TUBES

Press the tubes by hand into the positions indicated in the figure. Make sure that the oil tubes do not interfere with the oil pan.

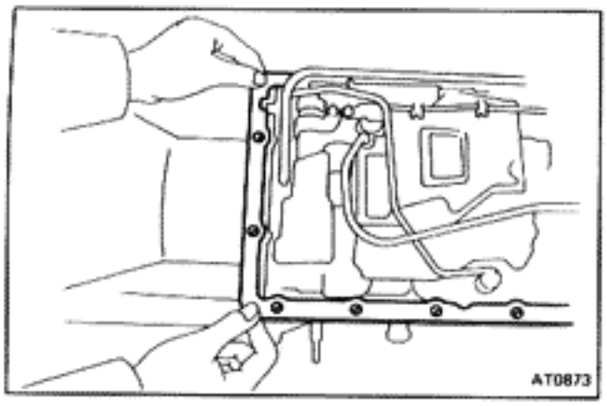

45. INSTALL TWO MAGNETS IN PAN AND INSTALL OIL PAN WITH NEW GASKET

(a) Align the cut part of the gasket and case.

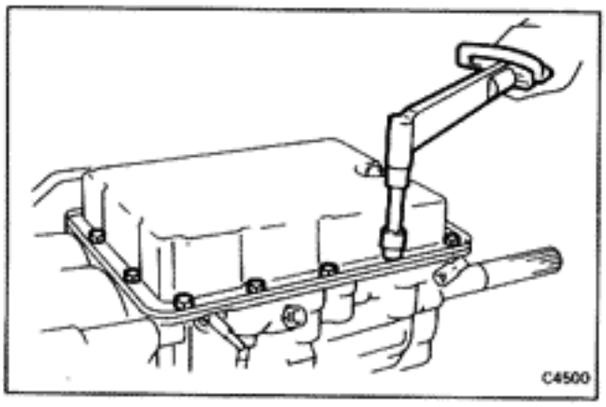

(b) Install the oil pan.

Torque: 45 kg-cm (39 in.-lb, 4.4 N·m)

CAUTION: Make sure that the two magnets do not interfere with the oil tubes or valve body.

46. INSTALL DRAIN PLUG WITH NEW GASKET

Torque: 205 kg-cm (15 ft-lb, 20 N·m)

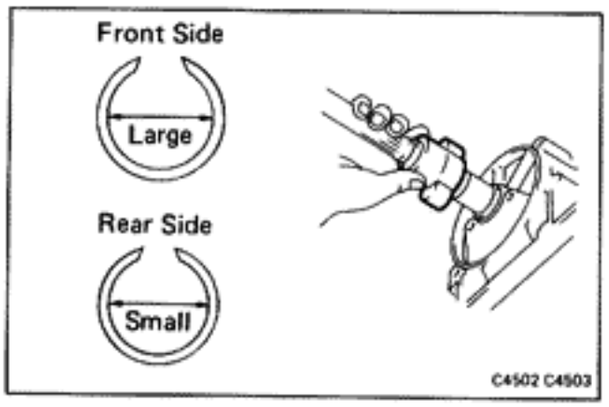

47. INSTALL SENSOR ROTOR AND SPEEDOMETER DRIVE GEAR

NOTE: Install the larger diameter snap ring at the front side.

(a) Install the larger snap ring and woodruff key onto the shaft.

(b) Install the sensor rotor.

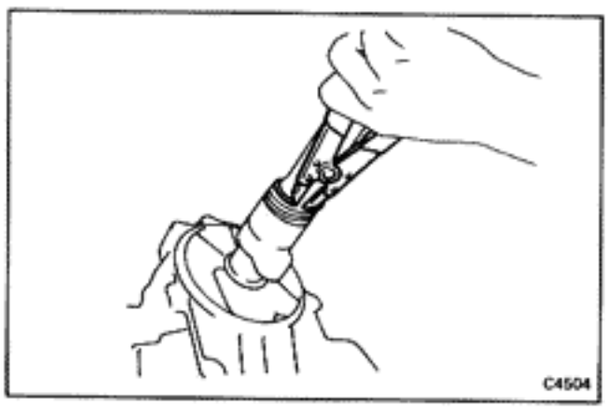

(c) Install the lock ball.

(d) Slide the speedometer gear on the shaft.

(e) Using snap ring pliers, install the outer snap ring.

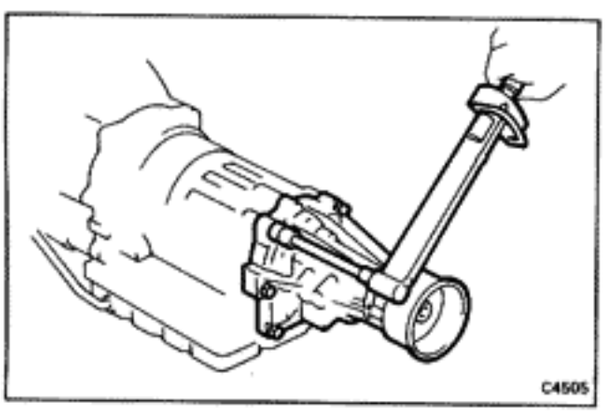

48. INSTALL EXTENSION HOUSING WITH NEW GASKET

Do not use the gasket sealer. Install the housing with four long bolts and two short bolts. Tighten the bolts.

Torque: 345 kg-cm (25 ft-lb, 34 N·m)

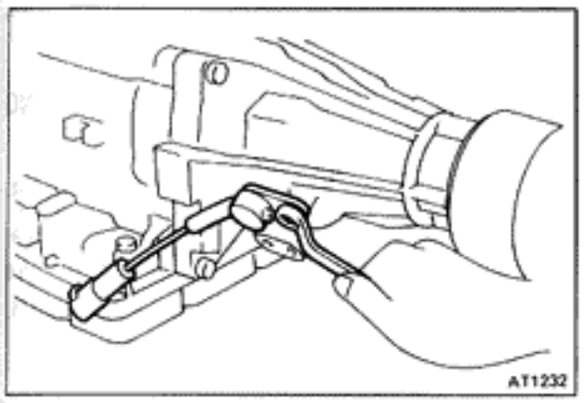

49. INSTALL SPEED SENSOR IN EXTENSION HOUSING

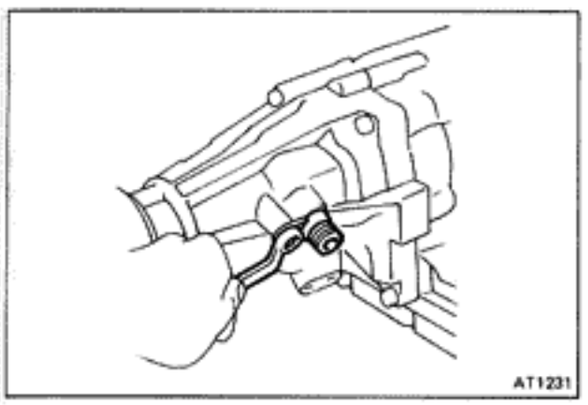

50. INSTALL NEW O-RINGS, BUSHING AND SPEEDOMETER DRIVEN GEAR TO SHAFT SLEEVE

51. INSTALL SPEEDOMETER DRIVEN GEAR ASSEMBLY IN EXTENSION HOUSING

Insert the shaft sleeve assembly into the housing. Install the lock plate with the bolt and lock washer.

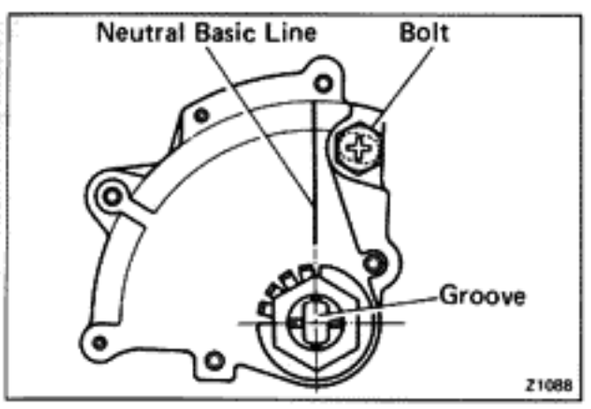

52. INSTALL NEUTRAL START SWITCH

(a) Slide the neutral start switch onto the control shaft.

(b) Install the grommet facing the groove toward the switch body and then install the washer and nut.

(c) Move the switch so that the slit in the switch and neutral basic line match up. Tighten the bolt and nut.

Torque: Bolt 55 kg-cm (48 in-lb, 5.4 N·m)
Nut 70 kg-cm (61 in-lb, 6.9 N·m)

53. INSTALL SHIFT HANDLE

INSTALLATION OF TRANSMISSION

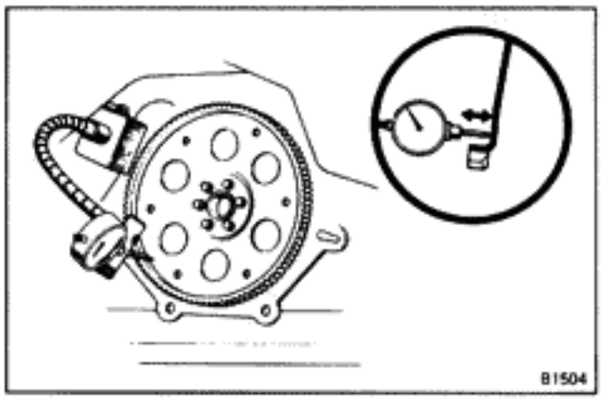

1. MEASURE DRIVE PLATE RUNOUT AND INSPECT RING GEAR

Set up a dial indicator and measure the drive plate runout.

If runout exceeds 0.20 mm (0.0079 in.) or if the ring gear is damaged, replace the drive plate. If installing a new drive plate, not the orientation of spacers and tighten the bolts.

Torque: 650 kg-cm (47 ft-lb, 64 N·m)

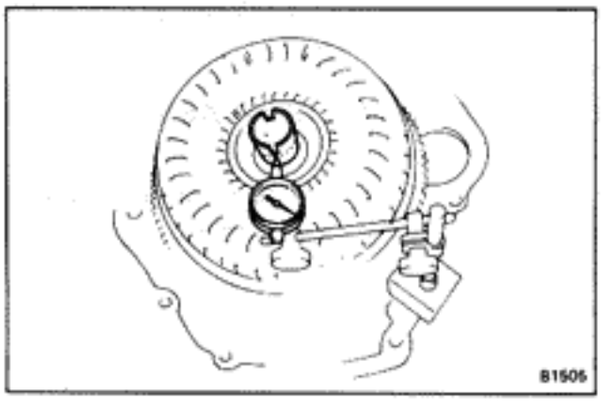

2. MEASURE TORQUE CONVERTER SLEEVE RUNOUT

(a) Temporarily mount the torque converter to the drive plate. Set up a dial indicator.

If runout exceeds 0.30 mm (0.0118 in.), try to correct by reorienting the installation of the converter. If excessive runout cannot be corrected, replace the torque converter.

NOTE: Mark the position of the converter to ensure correct installation.

(b) Remove the torque converter.

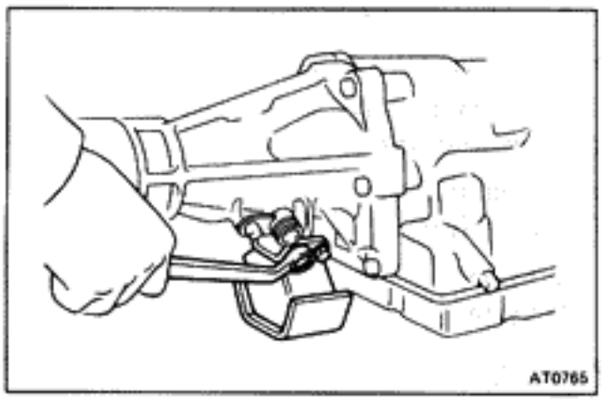

3. INSTALL ENGINE REAR MOUNT INSULATOR EXTENSION HOUSING

(a) Inspect the insulator for deterioration and replace if necessary.

(b) Install the ground cable between mount and case.

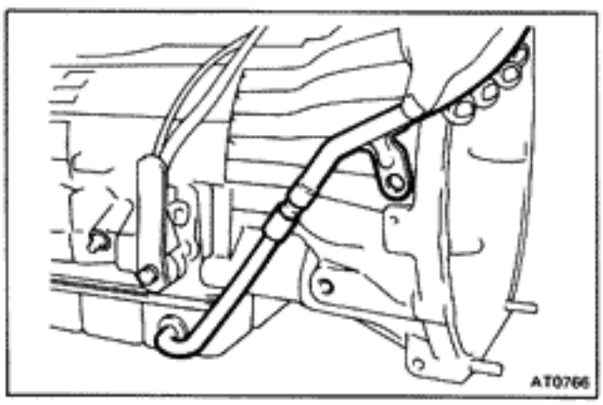

4. INSTALL FILLER TUBE

Replace a new O-ring and push the tube into place.

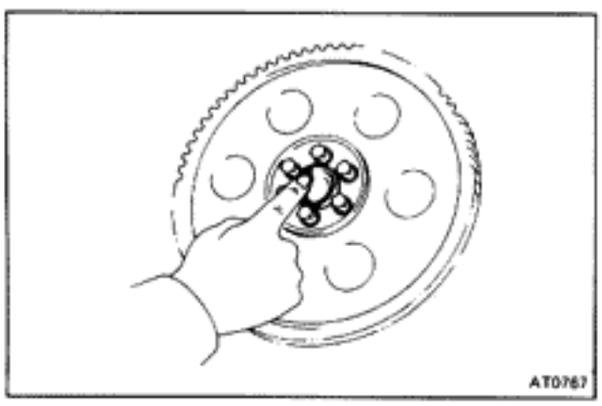

5. APPLY GREASE TO CENTER HUB OF TORQUE CONVERTER AND PILOT HOLE IN CRANKSHAFT

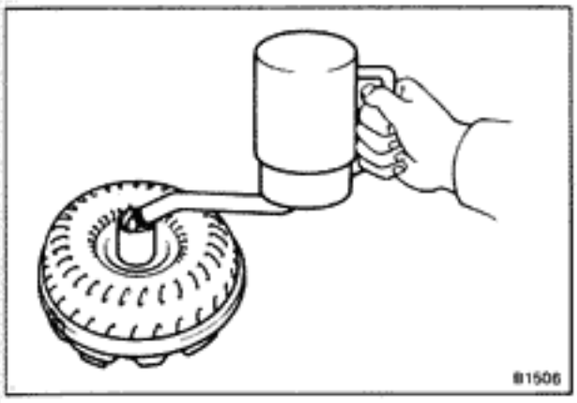

6. INSTALL TORQUE CONVERTER IN TRANSMISSION

If the torque converter has been drained and washed, refill with fresh ATF.

ATF capacity: 2.0 liters (2.1 US qts, 1.8 Imp. qts)

Fluid type: ATF DEXRON® II

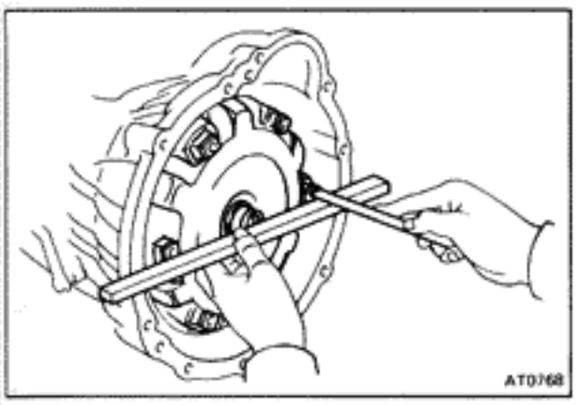

7. CHECK TORQUE CONVERTER INSTALLATION

Using calipers and a straight edge, measure from the installed surface to the front surface of the transmission housing.

Correct distance: 26 mm (1.02 in.)

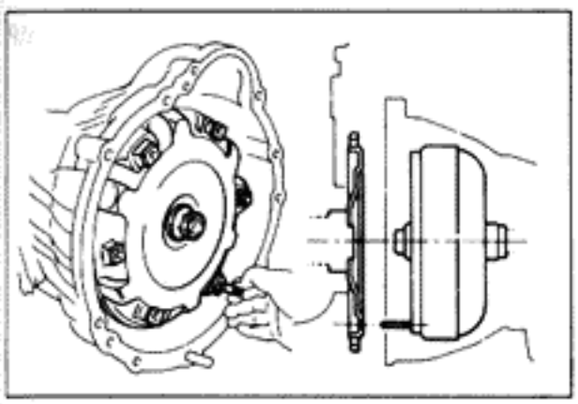

8. INSTALL GUIDE PIN IN TORQUE CONVERTER

9. ALIGN TRANSMISSION AT INSTALLATION POSITION

CAUTION: Be careful not to tilt the transmission forward because the torque converter could slide out.

(a) Align the guide pin with one of the drive plate holes.

(b) Align two sleeves on the block with the converter housing.

(c) Temporarily install one bolt.

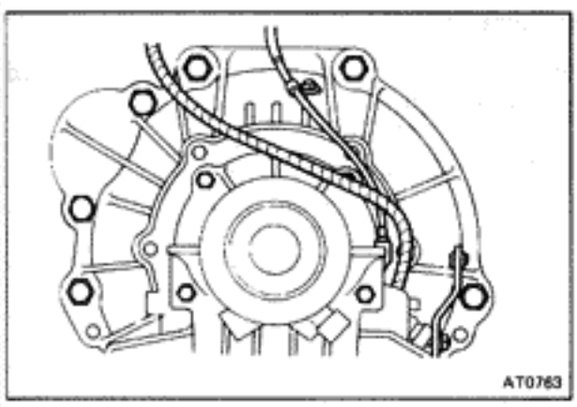

10. INSTALL TRANSMISSION HOUSING MOUNTING BOLTS

(a) Install the starter.

(b) Install the four transmission housing mounting bolts.

Torque: 650 kg-cm (47 ft-lb, 64 N·m)

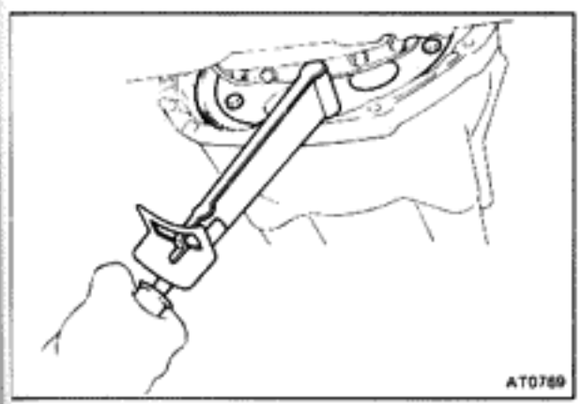

11. INSTALL SIX TORQUE CONVERTER BOLTS

(a) Remove the guide pin.

(b) Install the six bolts finger tight. Turn the crankshaft to gain access.

(c) Tighten the bolts evenly.

Torque: 280 kg-cm (20 ft-lb, 27 N·m)

12. INSTALL ENGINE UNDER COVER

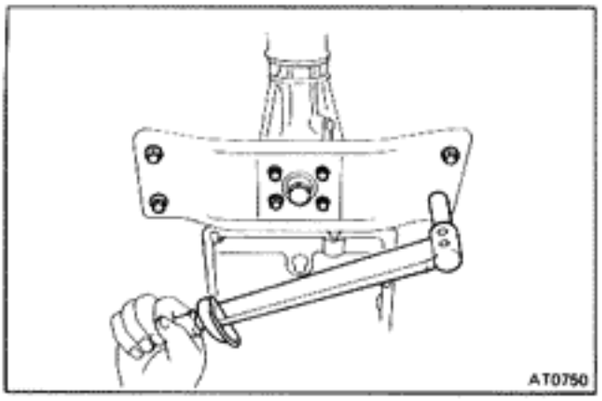

13. INSTALL REAR SUPPORT MEMBER ON BODY

(a) Install the two bolts at each end of the support.

(b) Connect the ground strap.

14. LOWER TRANSMISSION, AND INSTALL FOUR REMAINING MOUNTING BOLTS

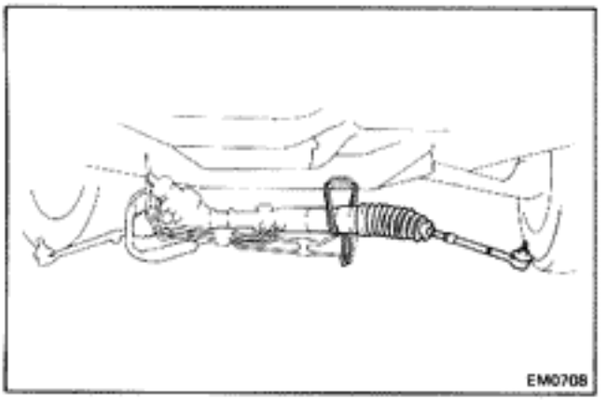

15. INSTALL POWER STEERING GEAR HOUSING

(a) Install the rubber cushions on the gear housing.

(b) Install the gear housing on the crossmember.

(c) Install the brackets and tighten the four bolts.

Torque: 770 kg-cm (56 ft-lb, 76 N·m)

(d) Install the clamps of fluid line.

(e) Connect the both tie rod ends to the knuckle arm.

Torque: 600 kg-cm (43 ft-lb, 59 N·m)

(f) Install the intermediate shaft.

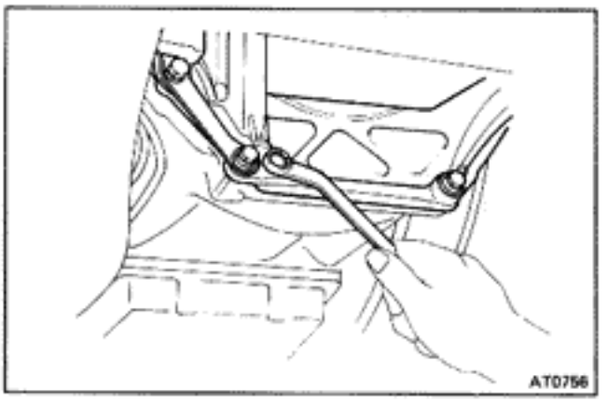

16. INSTALL CONVERTER COVER, EXHAUST PIPE CLAMP AND BOTH STIFFENER PLATES

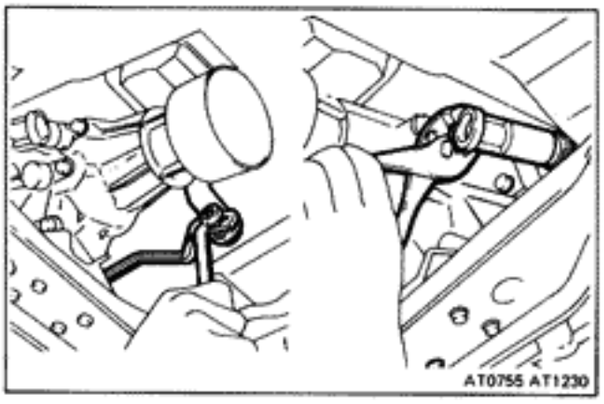

17. CONNECT SPEEDOMETER CABLE

Be sure the felt dust protector and washer are on the end of the cable. Tighten the collar with pliers.

18. CONNECT MANUAL SHIFT LINKAGE

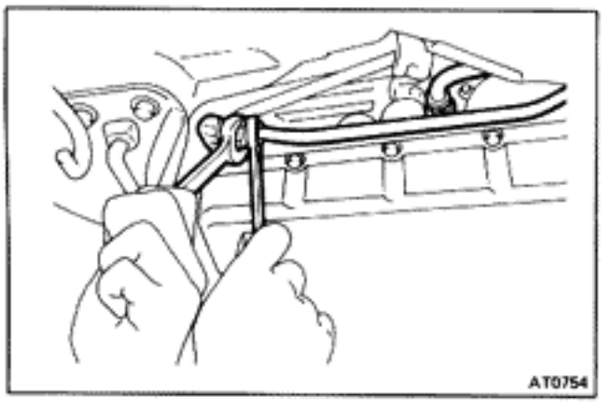

19. CONNECT OIL COOLER LINES

Torque: 350 kg-cm (25 ft-lb, 34 N·m)

20. CONNECT COOLING LINE BRACKET

Torque: 650 kg-cm (47 ft-lb, 64 N·m)

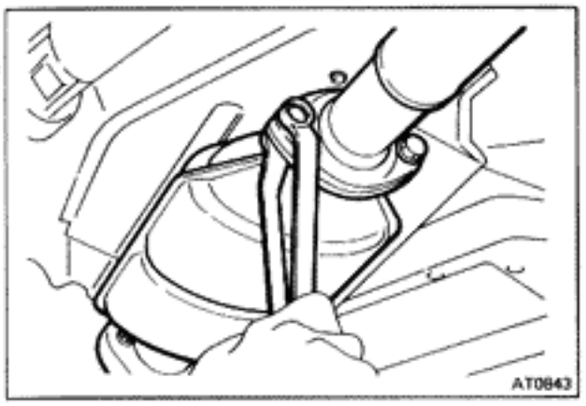

21. CONNECT TAIL PIPE AND FRONT PIPE

(a) Connect the pipe to the tail pipe.

(b) Install the two rubber hangers.

(c) Install the pipe clamp to the transmission case.

Torque: 440 kg-cm (32 ft-lb, 43 N·m)

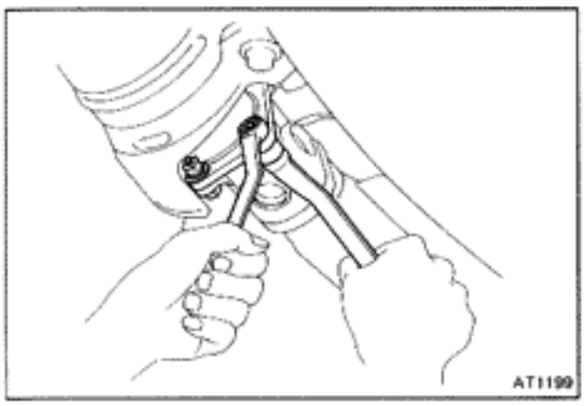

22. INSTALL INTERMEDIATE PROPELLER SHAFT

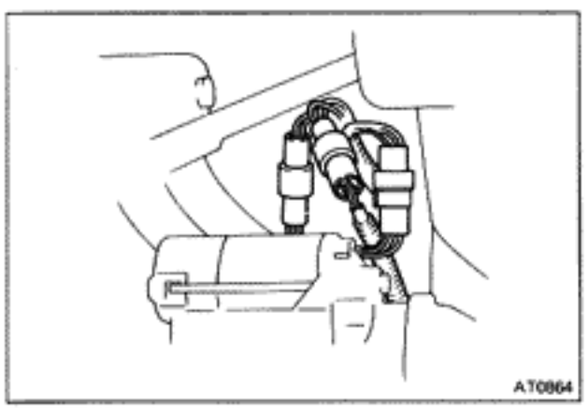

23. CONNECT WIRING CONNECTORS TO NEUTRAL START AND BACK-UP LIGHT SWITCHES

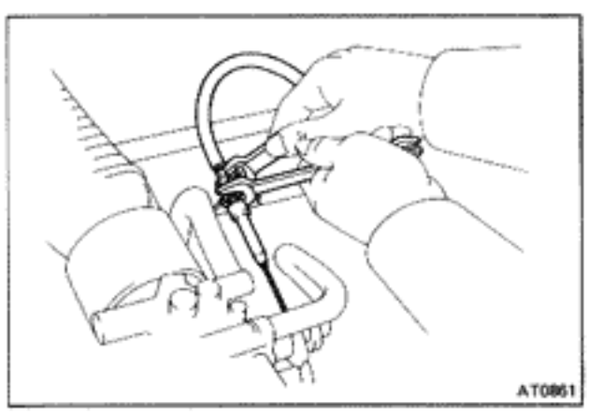

24. CONNECT TRANSMISSION THROTTLE CABLE

(a) Connect the cable to the throttle linkage.

(b) Connect the cable housing to the bracket.

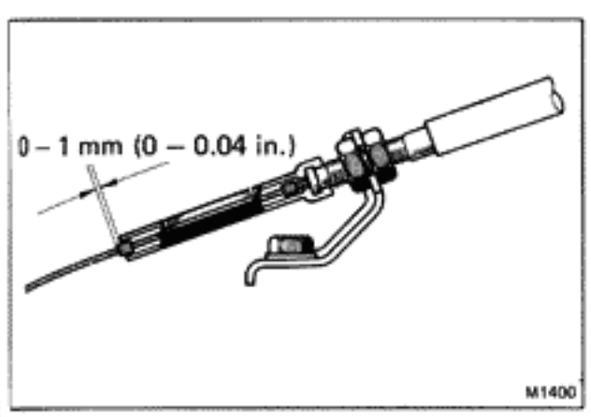

25. ADJUST TRANSMISSION THROTTLE CABLE

26. CONNECT UPPER RADIATOR HOSE AND FILL WITH COOLANT

27. CONNECT BATTERY CABLE TO NEGATIVE (–) TERMINAL

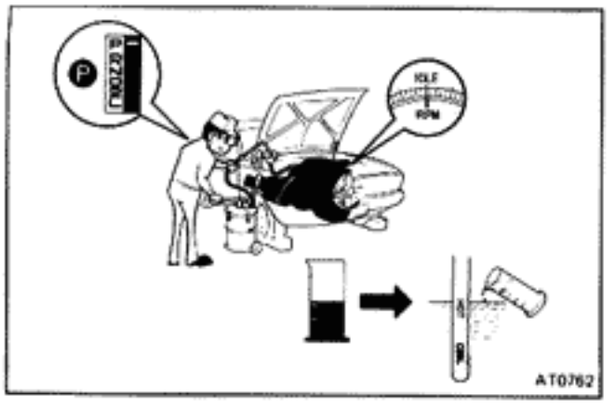

28. FILL TRANSMISSION WITH ATF

Add about 4.0 liters (4.2 US qts, 3.5 Imp. qts).

Fluid type: ATF DEXRON® II

Total capacity: 6.5 liters (6.9 US qts, 5.7 Imp. qts)

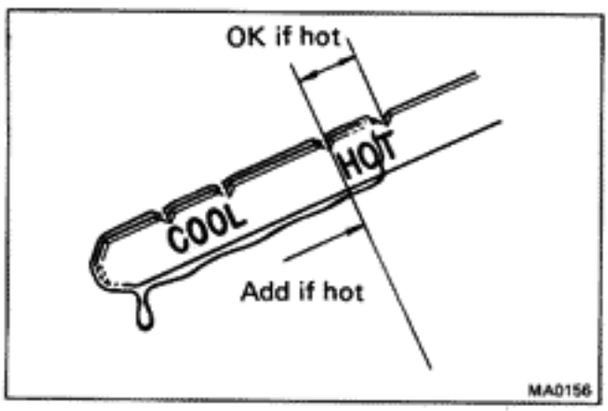

29. CHECK FLUID LEVEL (See page MA-13)

30. PERFORM ROAD TEST

Check for abnormal noise, shock, slippage, correct shift points and smooth operation.

PROPELLER SHAFT

	Page
PRECAUTIONS	PR-2
TROUBLESHOOTING	PR-2
PROPELLER SHAFT	PR-3

PRECAUTIONS

1. **As the universal joint is a non-disassembly type, the propeller shaft or intermediate shaft must be replaced as an assembly in event of universal joint trouble.**
2. **Be careful not to grip the propeller shaft tube too tightly in the vise as this will cause deformation.**

TROUBLESHOOTING

Problem	Possible cause	Remedy	Page
Noise	Sleeve yoke spline worn	Replace intermediate shaft	PR-4
	Center bearing worn	Replace center bearing	PR-4
	Spider bearing worn or stuck	Replace intermediate shaft or propeller shaft	PR-4
Vibration	Propeller shaft runout	Replace propeller shaft	PR-4
	Propeller shaft unbalance	Balance propeller shaft	PR-4
	Transmission extension housing rear bushing worn	Replace bushing	MT-15
	Sleeve yoke spline stuck	Replace intermediate shaft	PR-4

PROPELLER SHAFT

COMPONENTS

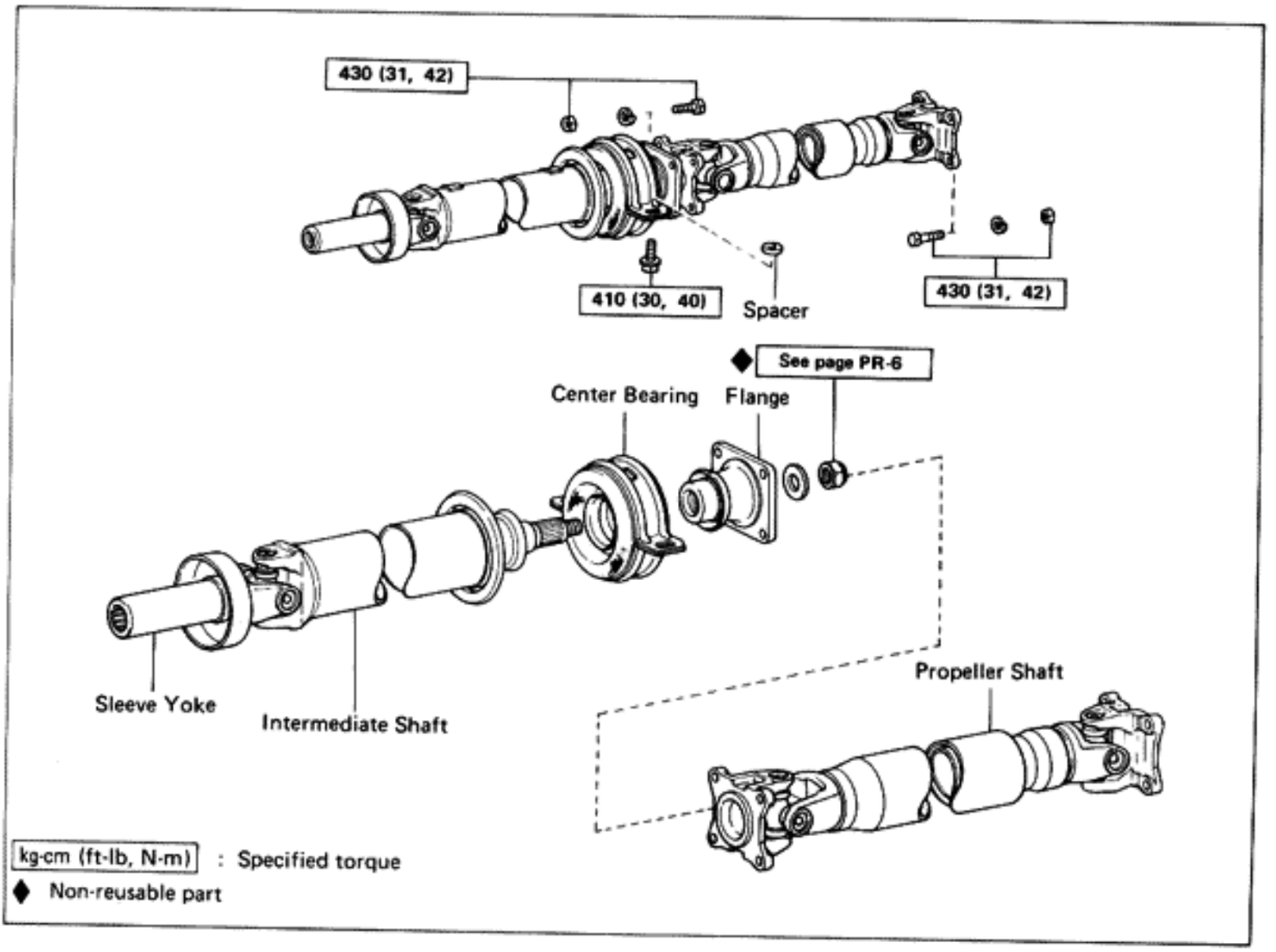

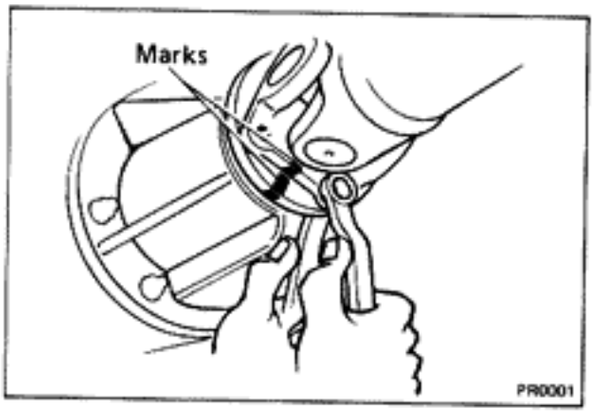

REMOVAL OF PROPELLER SHAFT

1. **DISCONNECT PROPELLER SHAFT FLANGE FROM FLANGE ON DIFFERENTIAL**
   (a) Place matchmarks on the flanges.
   (b) Remove the four bolts and nuts.

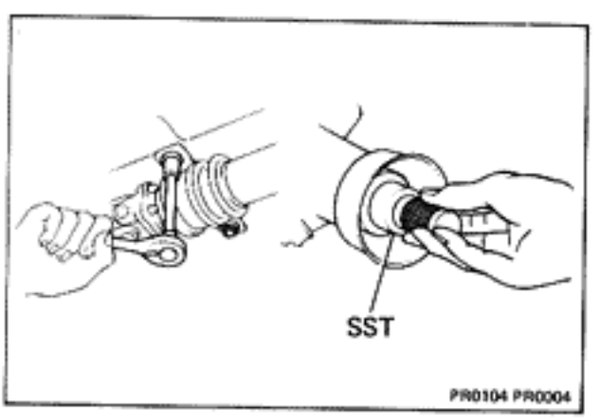

2. **REMOVE CENTER SUPPORT BEARING FROM BODY**

3. **REMOVE PROPELLER SHAFT**
   (a) Remove the center bearing mounting bolts.
   (b) Pull out the propeller shaft from the transmission.
   (c) Insert SST in the transmission to prevent oil leakage.
   SST 09325-20010

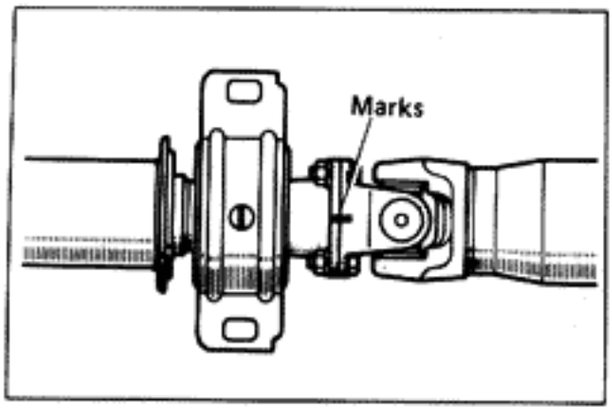

DISASSEMBLY OF PROPELLER SHAFT

1. SEPARATE PROPELLER SHAFT AND INTERMEDIATE SHAFT

(a) Place matchmarks on the flanges.

(b) Remove the four bolts and nuts.

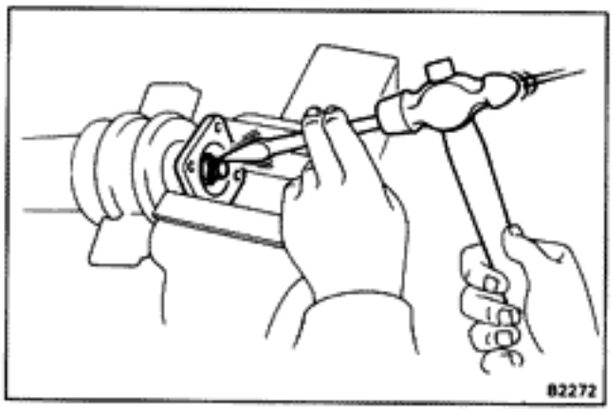

2. REMOVE CENTER SUPPORT BEARING FROM INTERMEDIATE SHAFT

(a) Using a hammer and chisel, loosen the staked part of the nut.

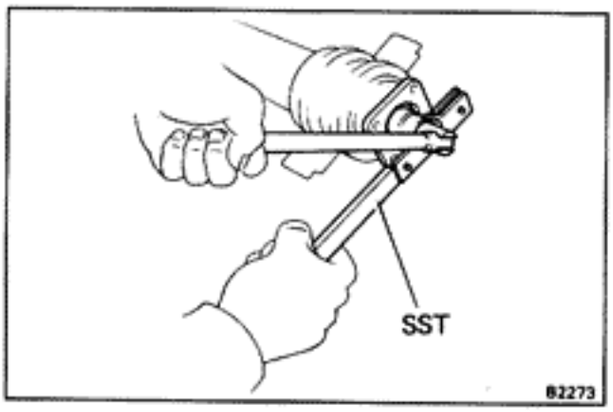

(b) Using SST to hold the flange, remove the nut.

SST 09330-00021

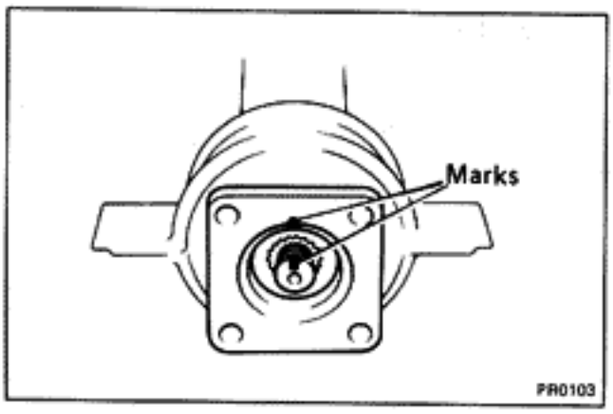

(c) Place alignment marks on the flange or yoke and shaft.

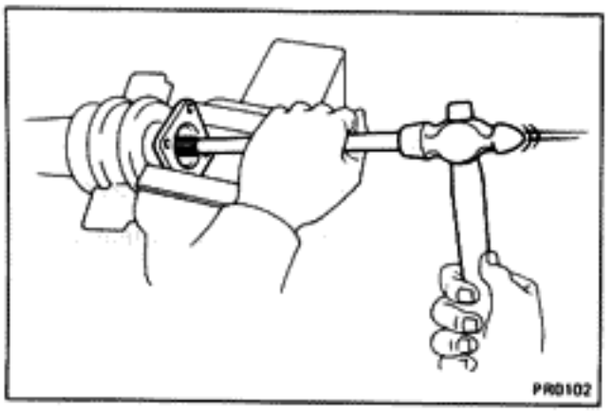

(d) Clamp the flange or yoke in a vise and tap off the shaft.

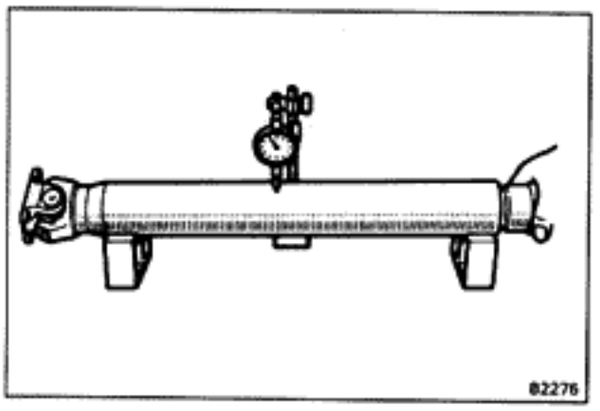

INSPECTION OF PROPELLER SHAFT COMPONENTS

1. INSPECT PROPELLER AND INTERMEDIATE SHAFTS FOR DAMAGE OR RUNOUT

If shaft runout is greater than maximum, replace the shaft.

Maximum runout: 0.8 mm (0.031 in.)

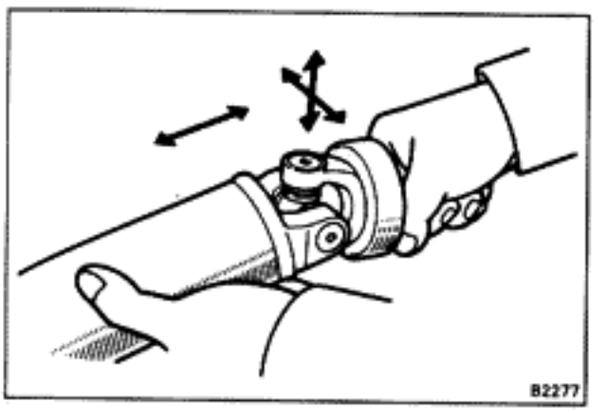

2. INSPECT SPIDER BEARINGS

(a) Inspect the spider bearings for wear or damage.

(b) Check the spider bearing axial play by turning the yoke while holding the shaft tightly.

Bearing axial play: 0 mm (0 in.)

If necessary, replace the propeller shaft.

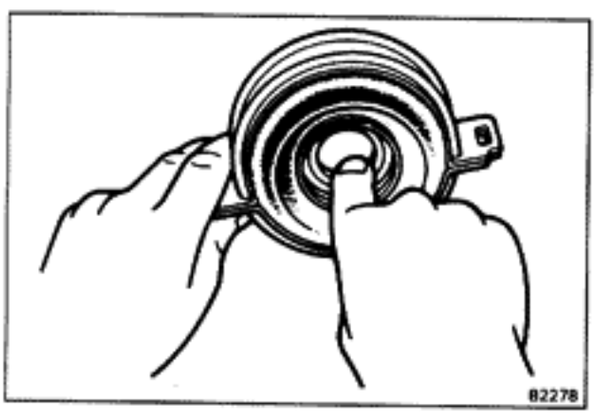

3. INSPECT CENTER SUPPORT BEARING FOR WEAR OR DAMAGE

Check that the bearing turns freely.

If the bearing is damaged, worn, or does not turn freely, replace it.

ASSEMBLY OF PROPELLER SHAFT

NOTE: If replacing either the center flange or intermediate shaft, reassemble them so that the front yoke of the intermediate shaft and the rear yoke of the propeller shaft are facing in the same direction shown in the figure below.

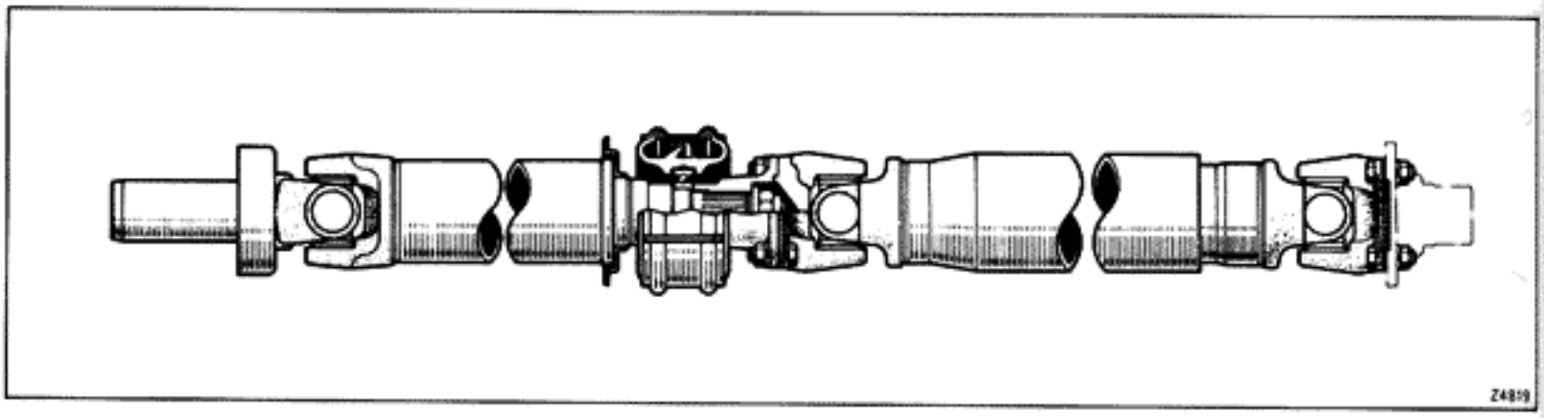

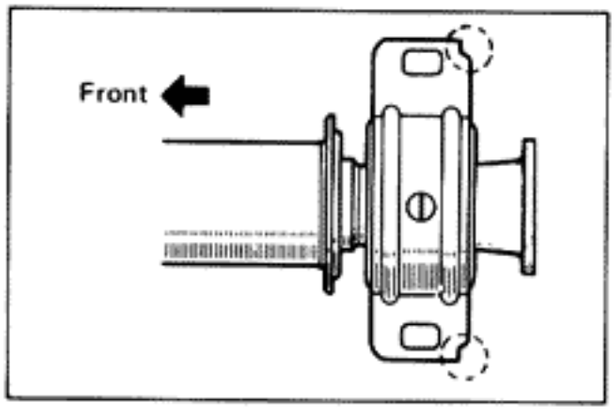

1. **INSTALL CENTER SUPPORT BEARING ON INTERMEDIATE SHAFT**

NOTE: Install the center support bearing with the cutout toward the rear.

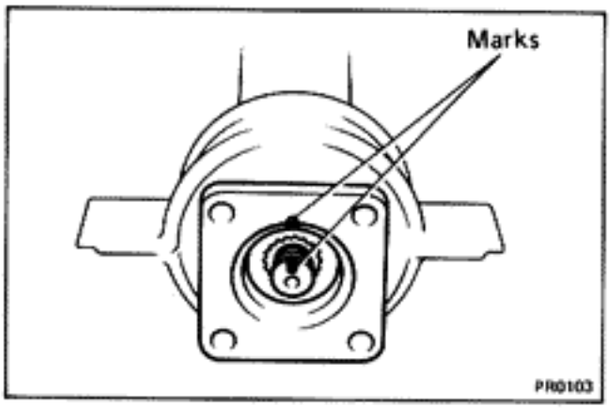

2. **INSTALL FLANGE ON INTERMEDIATE SHAFT**

(a) Coat the splines of the intermediate shaft with MP grease.

(b) Align the matchmarks and install the flange to the intermediate shaft.

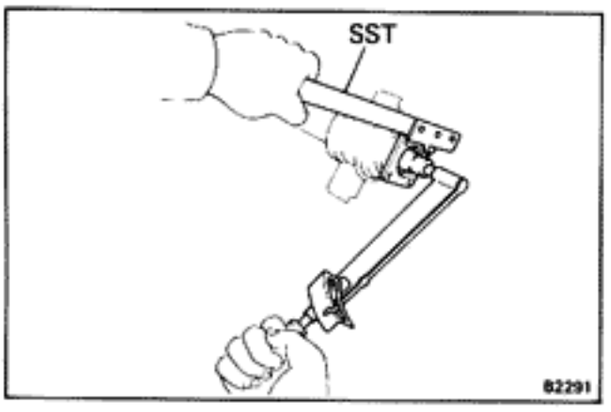

(c) Using SST to hold the flange, press the bearing into position by tightening down a new nut.

SST 09330-00021

Torque: 1,850 kg-cm (134 ft-lb, 181 N·m)

(d) Loosen the nut.

(e) Torque the nut again.

Torque: 700 kg-cm (51 ft-lb, 69 N·m)

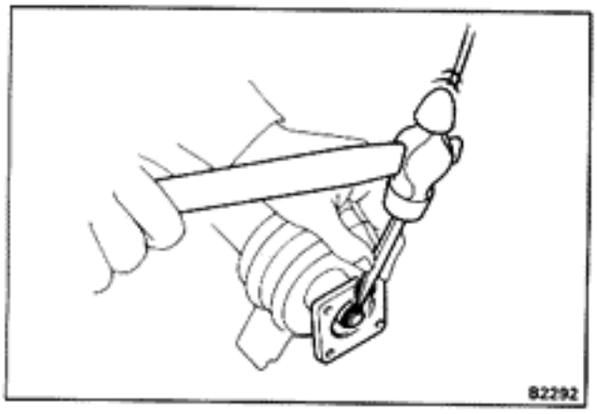

(f) Using a hammer and punch, stake the nut.

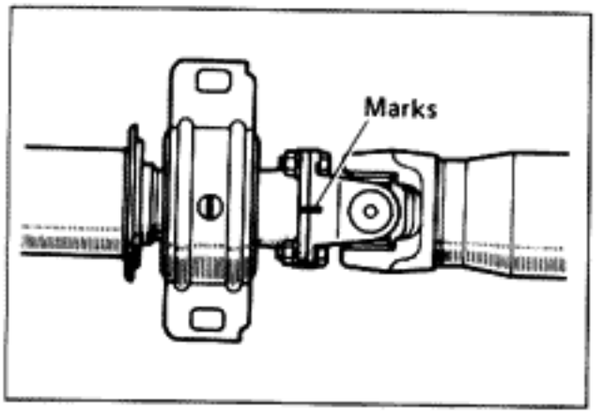

3. INSTALL PROPELLER SHAFT

(a) Align the marks on the flanges and connect the flanges with four bolts and nuts.

(b) Torque the bolts and nuts.

Torque: 430 kg-cm (31 ft-lb, 42 N·m)

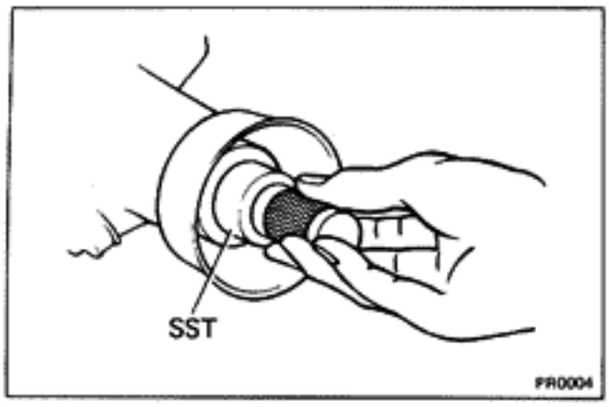

INSTALLATION OF PROPELLER SHAFT

(See page PR-3)

1. INSERT YOKE IN TRANSMISSION

(a) Remove SST from the transmission.

SST 09325-20010

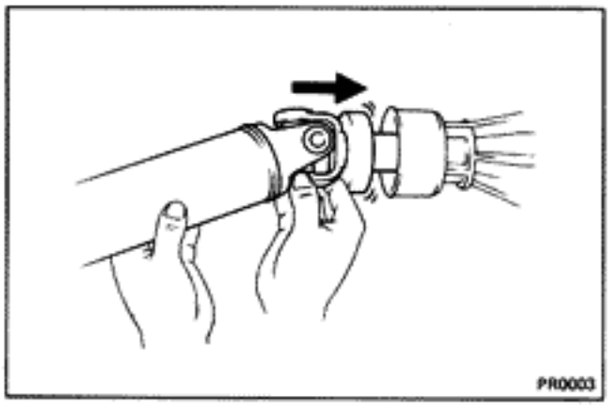

(b) Push the yoke into the transmission.

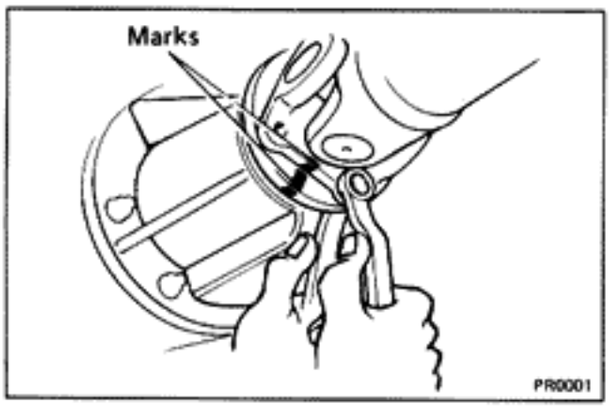

2. CONNECT PROPELLER SHAFT FLANGE TO COMPANION FLANGE ON DIFFERENTIAL

(a) Align the marks on the flanges and connect the flanges with four bolts and nuts.

(b) Torque the bolts and nuts.

Torque: 430 kg-cm (31 ft-lb, 42 N·m)

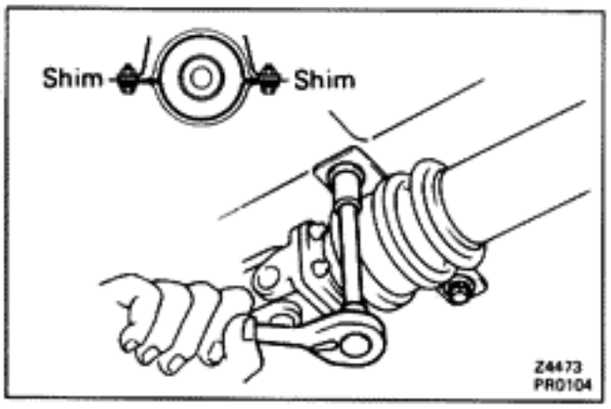

3. CONNECT CENTER SUPPORT BEARING TO BODY

(a) Place a height spacer between the body and center support bearing, and install the two mounting bolts finger tight.

NOTE: Some vehicles do not have a spacer. In this case, it is not necessary to insert one.

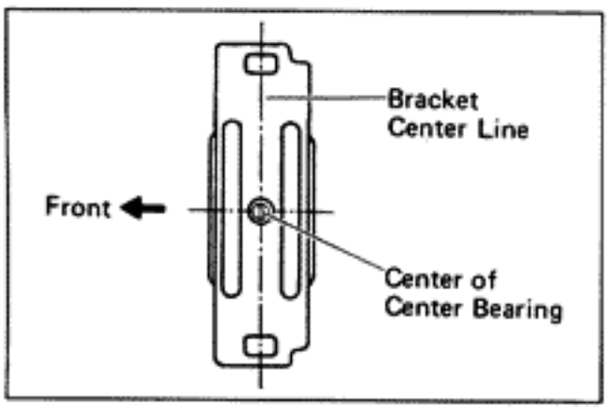

(b) Check that the bearing bracket is at right angle to the propeller shaft. Adjust the bracket if necessary.

(c) Check that the center line of the center bearing is set to the center line of the bracket when the vehicle is in a no-load condition. Adjust the bracket if necessary.

(d) Torque the mounting bolts.

Torque: 410 kg-cm (30 ft-lb, 40 N·m)

FRONT AXLE AND SUSPENSION

	Page
TROUBLESHOOTING	FA-2
FRONT WHEEL ALIGNMENT	FA-3
FRONT AXLE HUB	FA-6
FRONT AXLE SHOCK ABSORBER	FA-10
FRONT SUSPENSION	FA-14
Ball Joints	FA-14
Lower Arm	FA-15
Strut Bar	FA-18
Stabilizer Bar	FA-19

TROUBLESHOOTING

Problem	Possible cause	Remedy	Page
Wander/pulls	Tires worn or improperly inflated	Replace tires or inflate tires to proper pressure	FA-3
	Alignment incorrect	Check front end alignment	FA-3
	Wheel bearing adjusted too tight	Adjust wheel bearing	FA-8
	Front or rear suspension parts loose or broken	Tighten or replace suspension part	
	Steering gear out of adjustment or broken	Adjust or repair steering gear	SR-2, 27
Bottoming	Vehicle overloaded	Check loading	
	Springs weak	Replace spring	FA-11
Sways/pitches	Tires improperly inflated	Inflate tires to proper pressure	FA-3
	Stabilizer bar bent or broken	Inspect stabilizer bar	FA-19
	Shock absorber worn out	Replace shock absorber	FA-11
Front wheel shimmy	Tires worn or improperly inflated	Replace tires or inflate tires to proper pressure	FA-3
	Wheels out of balance	Balance wheels	
	Alignment incorrect	Check front end alignment	FA-3
	Wheel bearings worn or improperly adjusted	Replace or adjust wheel bearings	FA-6
	Ball joints or bushings worn	Inspect ball joints and bushings	FA-14
	Steering gear out of adjustment or broken	Adjust or repair steering gear	SR-2, 27
Abnormal tire wear	Tires improperly inflated	Inflate tires to proper pressure	FA-3
	Alignment incorrect	Check toe-in	FA-5
	Suspension parts worn	Replace suspension part	

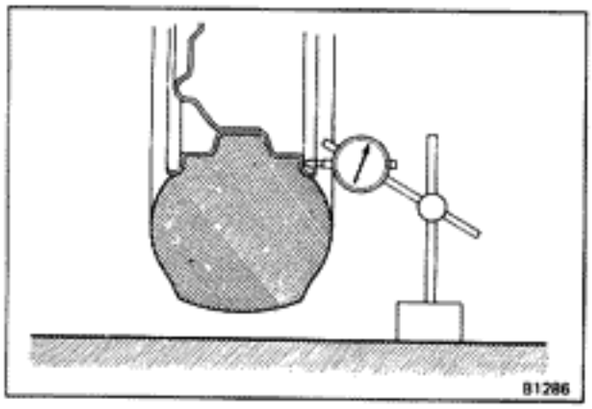

FRONT WHEEL ALIGNMENT

1. MAKE FOLLOWING CHECKS AND CORRECT ANY PROBLEMS

(a) Check the tires for wear and proper inflation.

Cold tire inflation pressure: 1.9 kg/cm² (27 psi, 186 kPa)

(b) Check the wheel runout.

Lateral runout: Less than 1.0 mm (0.039 in.)

(c) Check the front wheel bearings for looseness.

(d) Check the front suspension for looseness.

(e) Check the steering linkage for looseness.

(f) Check that the front absorbers work properly by using the standard bounce test.

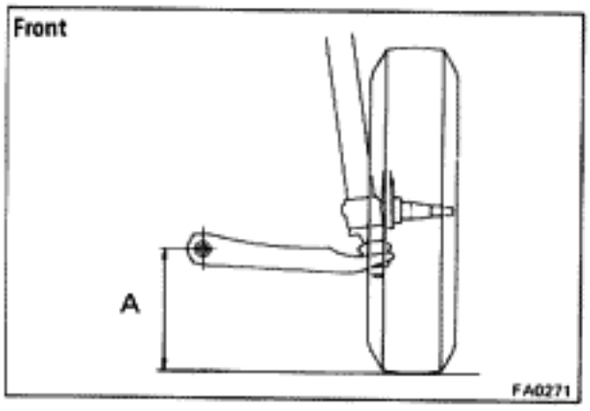

2. MEASURE VEHICLE HEIGHT

Vehicle height

mm (in.)

Tire size	Front A	Rear B
225/60 HR14	223.0 (8.780)	263.0 (10.354)

If height of the vehicle is not as specified, try to level the vehicle by shaking it down. If the height is still not correct, check for bad springs and worn or loose suspension parts.

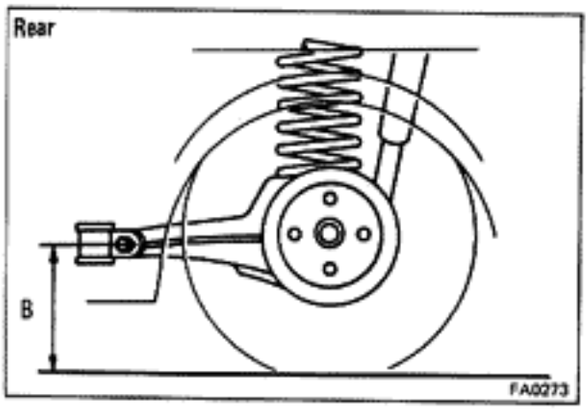

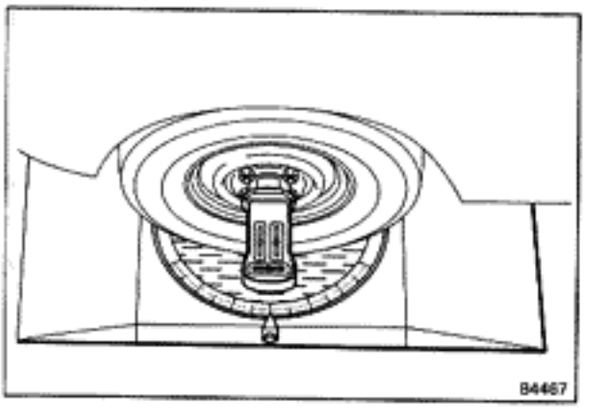

3. INSTALL WHEEL ALIGNMENT EQUIPMENT

Follow the specific instructions of the equipment manufacturer.

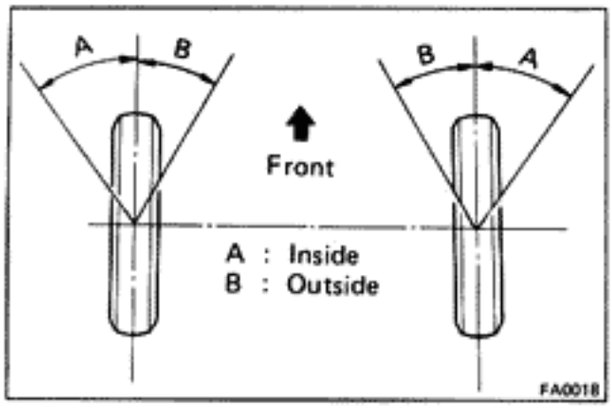

4. ADJUST WHEEL ANGLE

Remove the caps of the knuckle stopper bolts and check the steering angles.

Wheel angle:

Inside wheel	**37°35′ ± 2°**
Outside wheel	**30°45′ (Reference)**

NOTE: When the steering wheel is fully turned, make sure that the wheel is not touching the body or brake flexible hose.

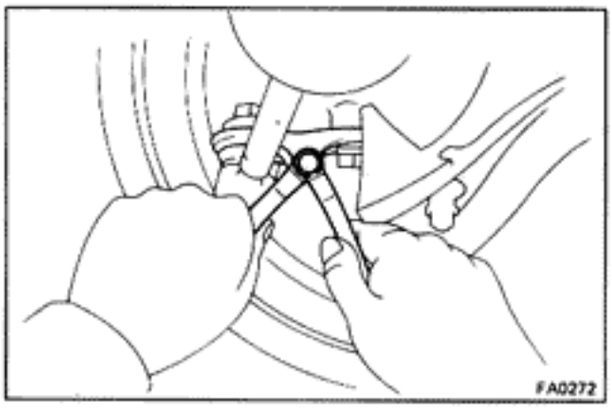

If steering angles differ from standard value, adjust the wheel angle with the knuckle stopper bolts.

Torque: 350 kg-cm (25 ft-lb, 34 N·m)

If the wheel angle still cannot be adjusted within limits, inspect and replace any damaged or worn steering parts.

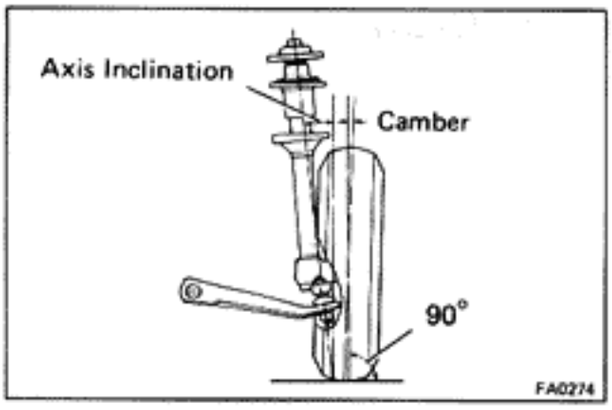

5. ADJUST CAMBER AND STEERING AXIS INCLINATION

Camber:

Inspection standard	**50′ ± 45′**
Left-right error	**30′**

Steering axis inclination:

Inspection standard	**10°10′ ± 45′**
Left-right error	**30′**

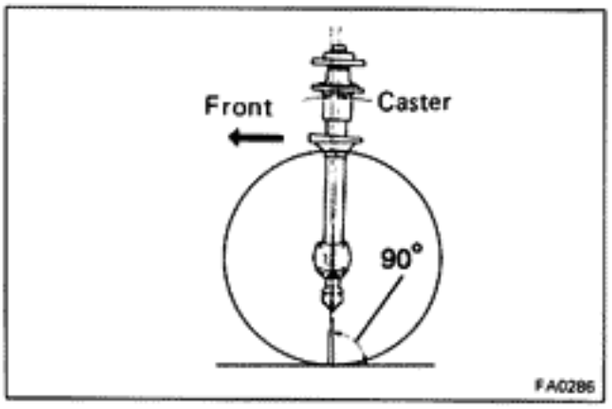

6. ADJUST CASTER

Caster:

Inspection standard	**4°10′ ± 45′**
Adjustment standard	**4°10′ ± 30′**
Left-right error	**30′**

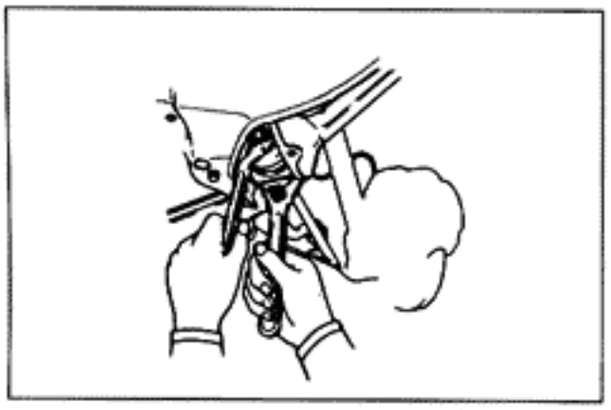

If caster is out of tolerance, adjust it at the staked nuts of the strut bar.

Torque: 1,050 kg-cm (76 ft-lb, 103 N·m)

NOTE: Decrease caster by lengthening the strut bar. Increase caster by shortening the strut bar. One turn of the nut changes caster by 8′.

If caster still cannot be adjusted within limits, inspect and replace damaged or worn front suspension parts.

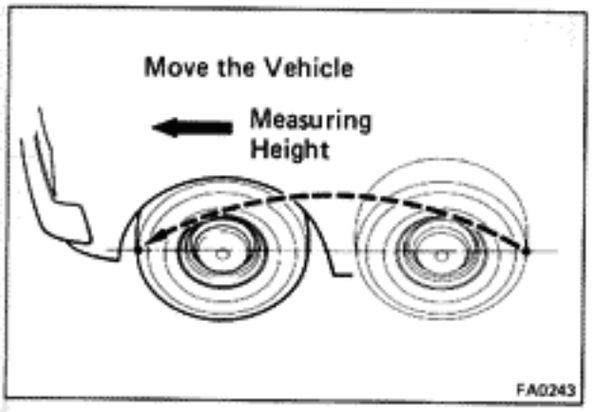

7. ADJUST TOE-IN

(a) Make sure the wheels are positioned straight ahead.

(b) Mark the center of each rear tread and measure the distance between the marks of right and left tires.

(c) Advance the vehicle until the marks on the rear of the tires come to the front.

NOTE: The toe-in should be measured at the same point on the tire and at the same level.

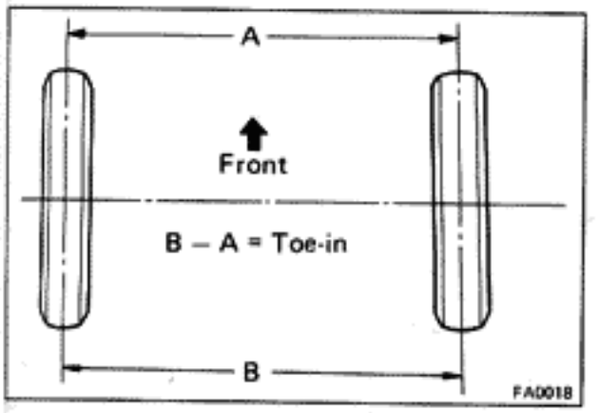

(d) Measure the distance between the marks on the front of the tires.

Inspection standard: 3 ± 2 mm (0.12 ± 0.08 in.)
Adjustment standard: 3 ± 1 mm (0.12 ± 0.04 in.)

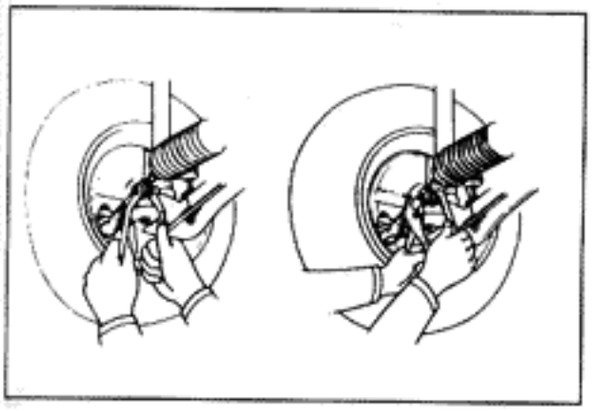

(e) Remove the rack boot clips and loosen the clamp bolts.

(f) Adjust toe-in by turning the left and right tie rod tubes an equal amount.

NOTE: Make sure that the tie rods are the same length.

(g) Tighten the clamp bolts and torque them.

Torque: 175 kg-cm (13 ft-lb, 17 N-m)

(h) Install the rack boot clips.

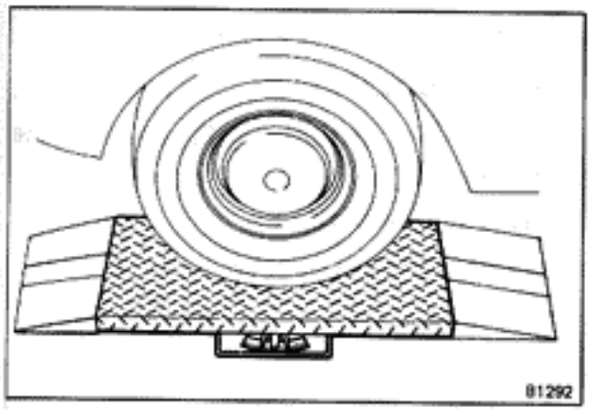

8. INSPECT SIDE SLIP WITH SIDE SLIP TESTER

Side slip limit:
Less than 3.0 mm/m (0.118 in./3.3 ft)

If the side slip exceeds the limit, the toe-in or other front wheel alignment may not be correct.

FRONT AXLE HUB

COMPONENTS

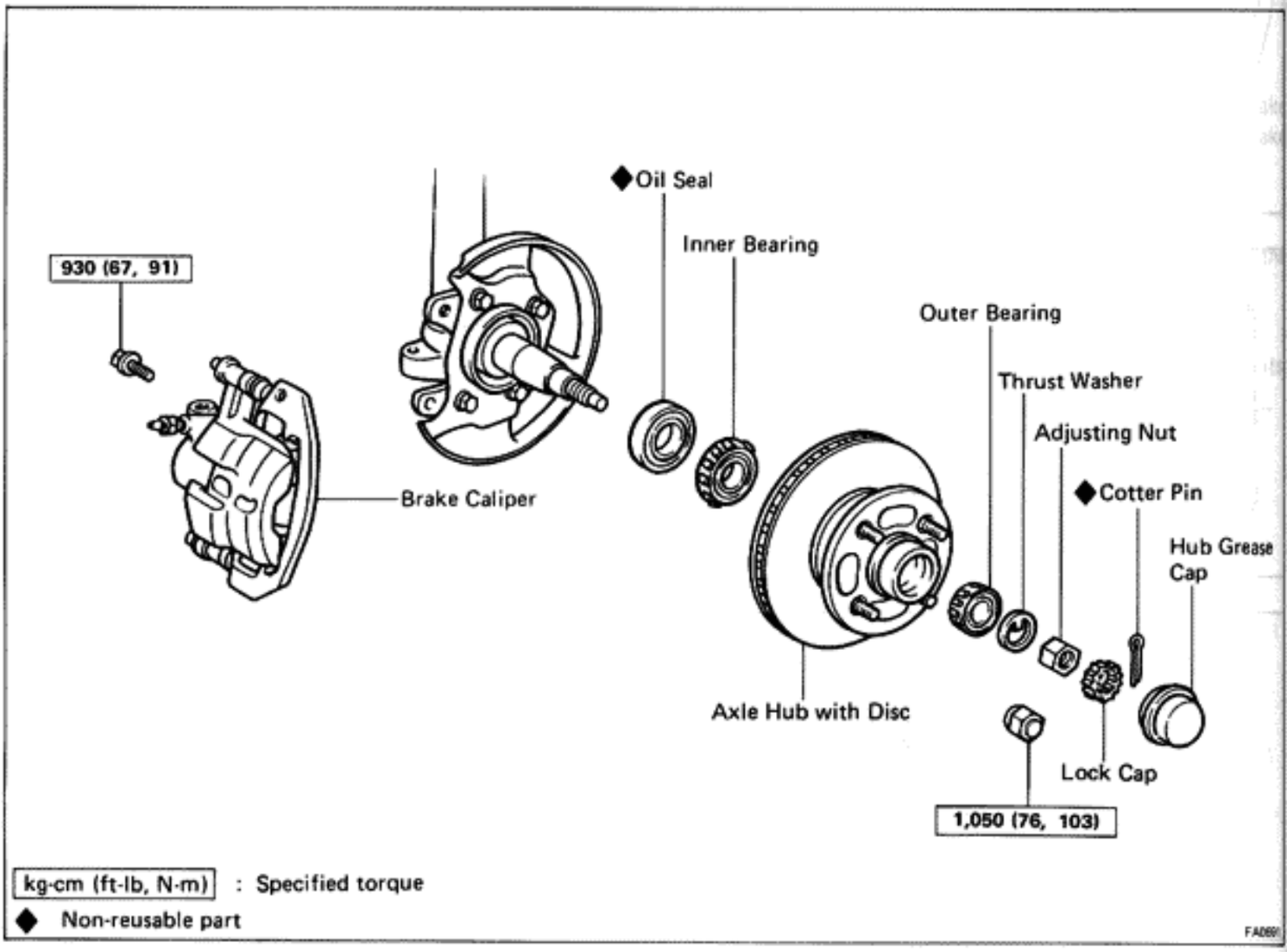

kg-cm (ft-lb, N-m) : Specified torque

◆ Non-reusable part

FA089

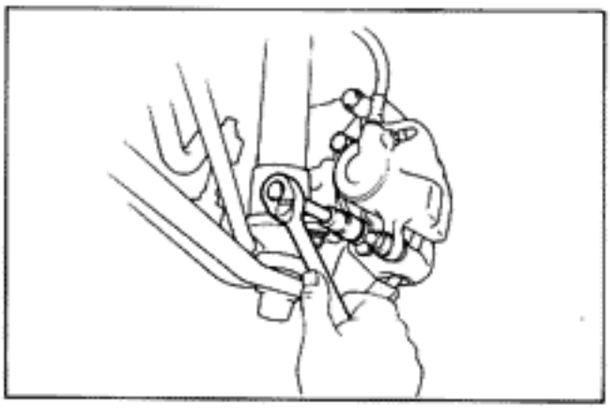

DISASSEMBLY OF FRONT AXLE HUB

1. REMOVE DISC BRAKE CALIPER

(a) Remove the caliper mounting bolts and remove caliper from the knuckle.

(b) Suspend the caliper with a cord.

NOTE: Do not disconnect the brake hose.

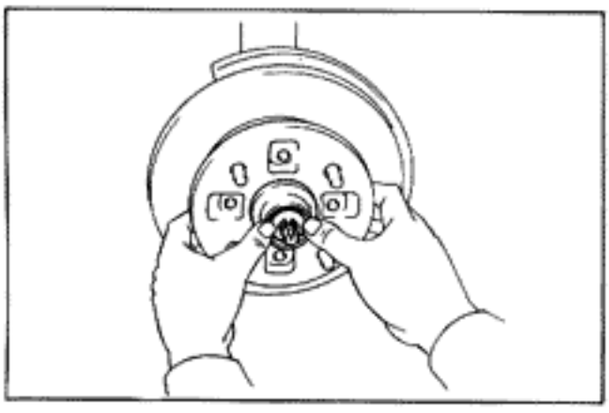

2. REMOVE AXLE HUB WITH DISC

(a) Remove the hub grease cap, cotter pin, lock cap, nut and axle hub.

(b) Remove the hub and disc together with the outer bearing and thrust washer.

NOTE: Be careful not to drop the outer bearing.

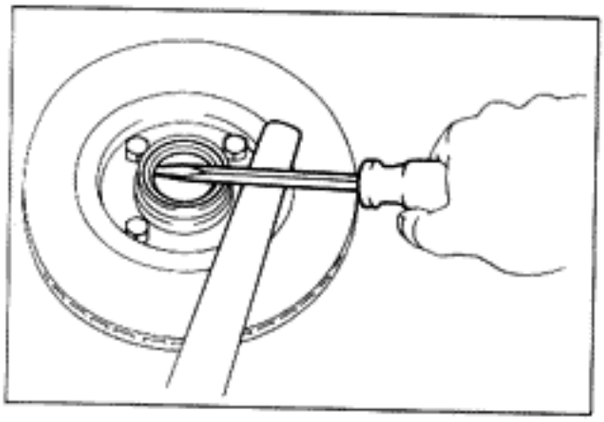

3. REMOVE INNER BEARING AND OIL SEAL

(a) Using a screwdriver, pry out the oil seal.

(b) Remove the inner bearing from the disc.

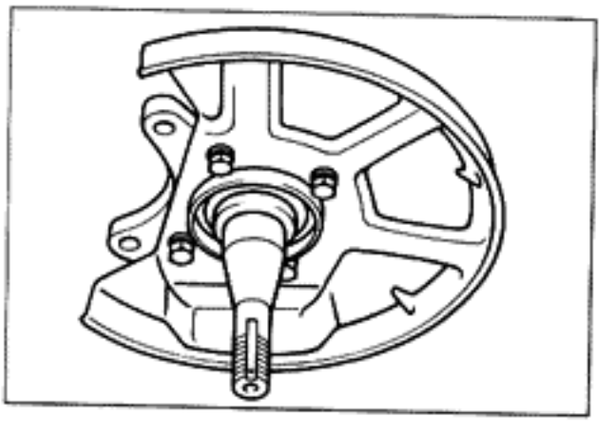

INSPECTION AND REPAIR OF FRONT AXLE HUB

1. INSPECT SPINDLE

Using a magnetic flaw detector or flaw detecting penetrant, check for damage or cracks.

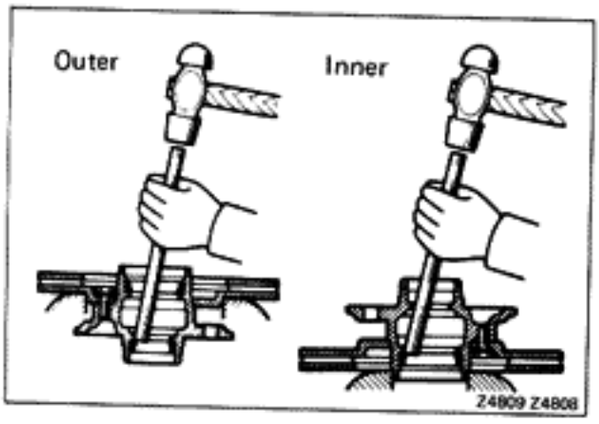

2. INSPECT BEARING

Clean the bearings and outer races and inspect them for wear or damage.

3. REPLACE BEARING OUTER RACE

(a) Using a brass bar and hammer, drive out the bearing outer race.

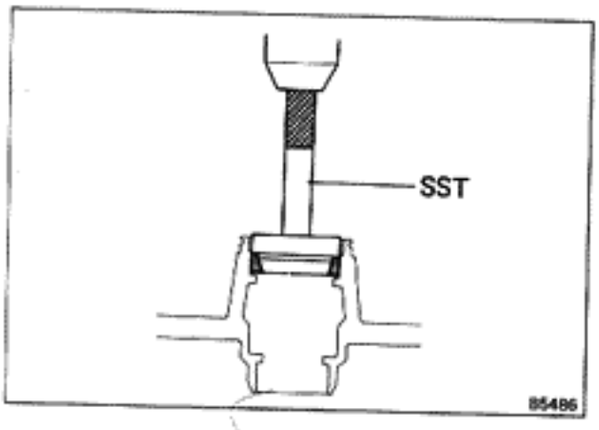

(b) Using SST, carefully drive in a new bearing outer race.

SST 09608-30022 (09608-05010, 09608-05040)

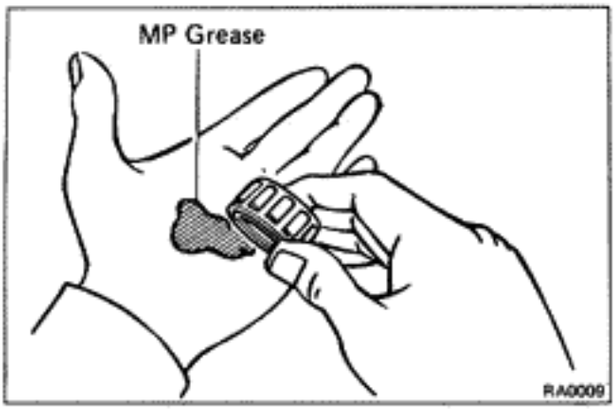

ASSEMBLY OF FRONT AXLE HUB

(See page FA-6)

1. PACK BEARINGS WITH MP GREASE

(a) Place MP grease in the palm of your hand.

(b) Pack grease into the bearing, continuing until the grease oozes out from the other side.

(c) Do the same around the bearing circumference.

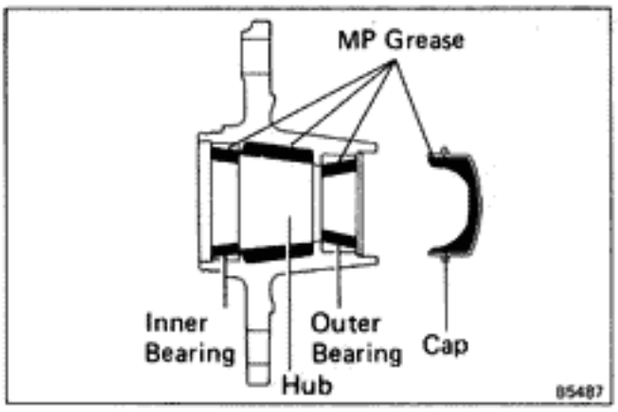

2. COAT INSIDE OF HUB AND CAP WITH MP GREASE

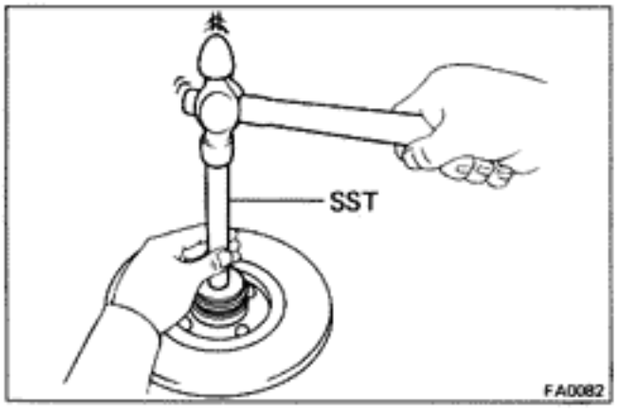

3. INSTALL INNER BEARING AND OIL SEAL

Place inner bearing into the hub. Using SST, drive the oil seal into the hub. Coat the oil seal with MP grease.

SST 09608-30022 (09608-05010, 09550-00050)

4. INSTALL AXLE HUB ON SPINDLE

(a) Place the axle hub on the spindle.

(b) Install the outer bearing and thrust washer.

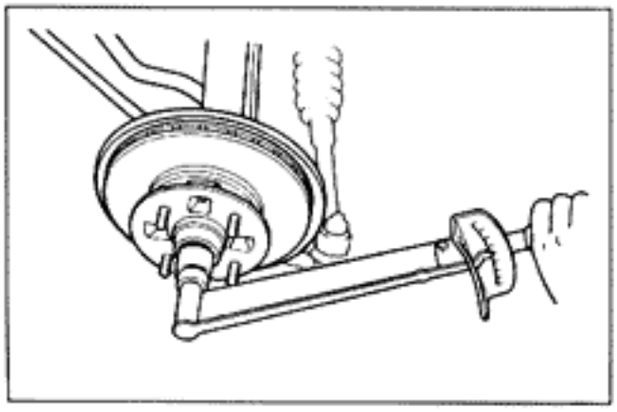

5. ADJUST PRELOAD

(a) Install and torque the nut.

Torque: 300 kg-cm (22 ft-lb, 29 N-m)

(b) Turn the hub right and left two or three times to allow the bearings to settle.

(c) Loosen the nut so there is 0.5 – 1.0 mm (0.020 – 0.039 in.) play in the hub axial direction.

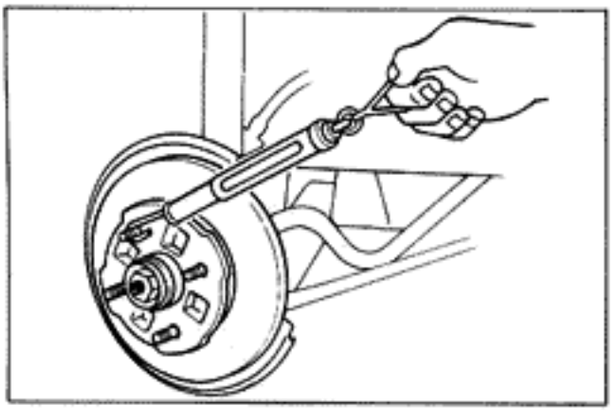

(d) Using a spring tension gauge, measure the rotation friction force of the oil seal.

(e) Using a socket in your hand, tighten the nut as tight as possible.

(f) Check the preload.

Preload:

In addition to rotation friction force of the oil seal
0 – 1,050 g (0 – 2.3 lb, 0 – 10 N)

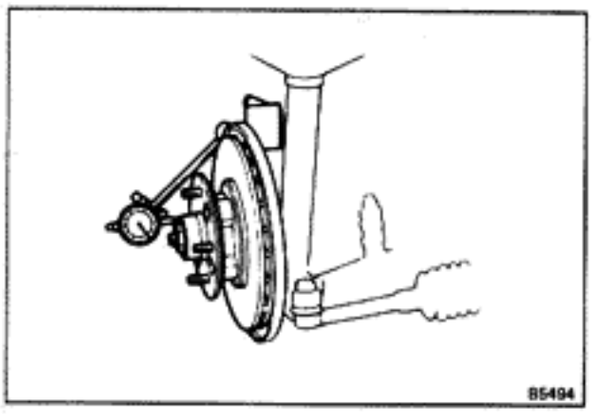

If preload is less than specification, tighten the nut slightly and check again.
If preload is excessive, loosen the nut and, using a socket in your hand, retighten it as tight as possible. Check the preload again.

(g) Measure the hub axial play.

Limit: 0.05 mm (0.0020 in.)

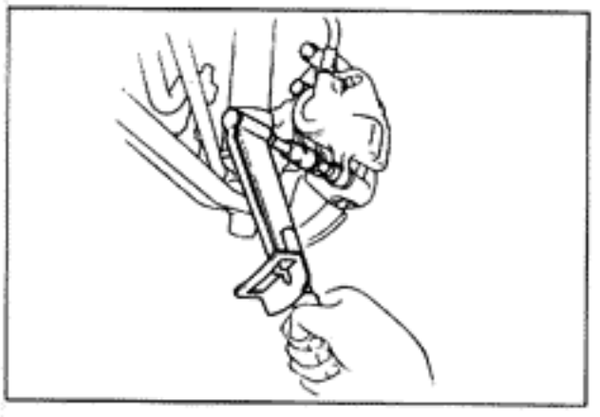

6. INSTALL LOCK CAP, COTTER PIN AND HUB GREASE CAP

NOTE: If the cotter pin hole does not line up, correct by tightening the nut by the smallest amount possible.

7. INSTALL DISC BRAKE CALIPER

Install brake caliper on the disc. Torque the mounting bolts.

Torque: 930 kg-cm (67 ft-lb, 91 N·m)

FRONT AXLE SHOCK ABSORBER

COMPONENTS

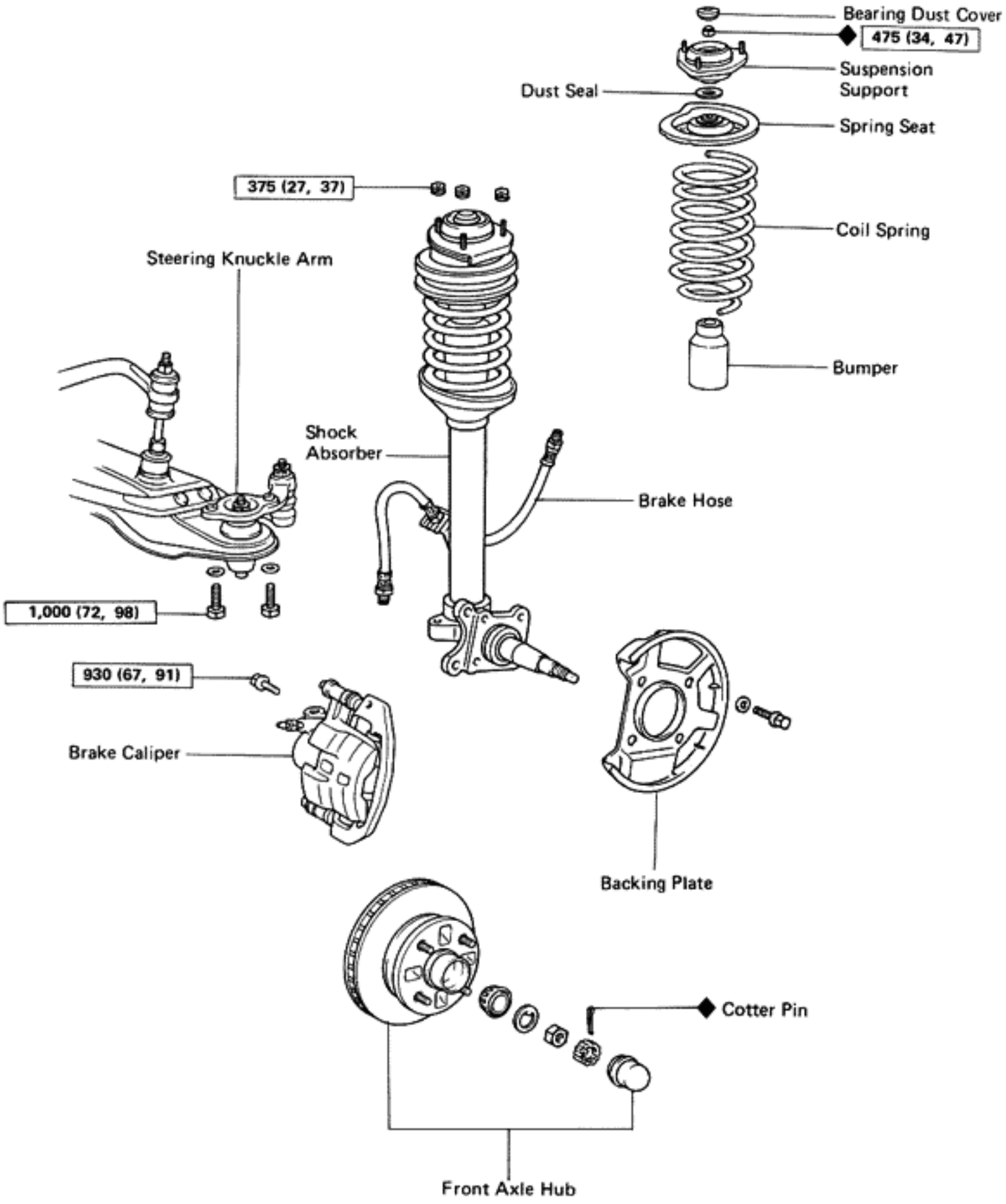

kg-cm (ft-lb, N·m) : Specified torque

◆ Non-reusable part

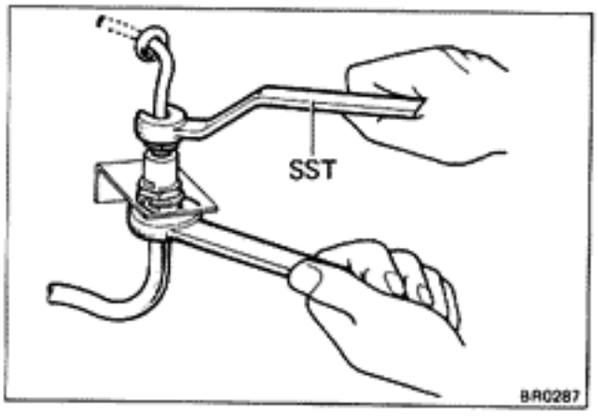

REMOVAL OF FRONT SHOCK ABSORBER ASSEMBLY

1. DISCONNECT BRAKE TUBE

Using SST and an open end wrench, disconnect the brake tube from the flexible hose.

Drain the brake fluid into a container.

SST 09751-36011

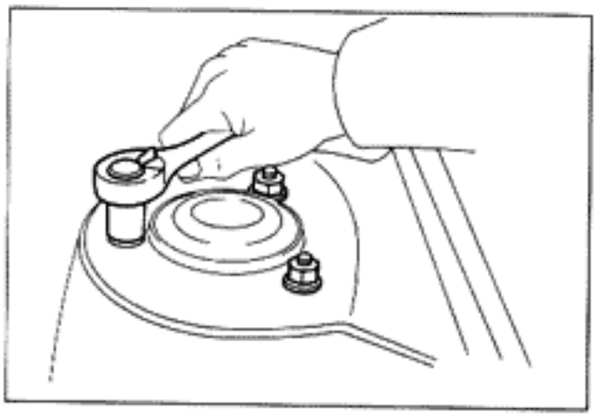

2. REMOVE THREE NUTS

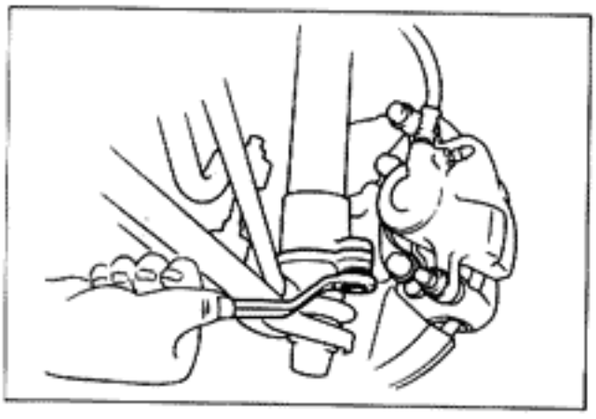

3. REMOVE TWO BOLTS

Remove the two bolts mounting the shock absorber assembly to the steering knuckle arm.

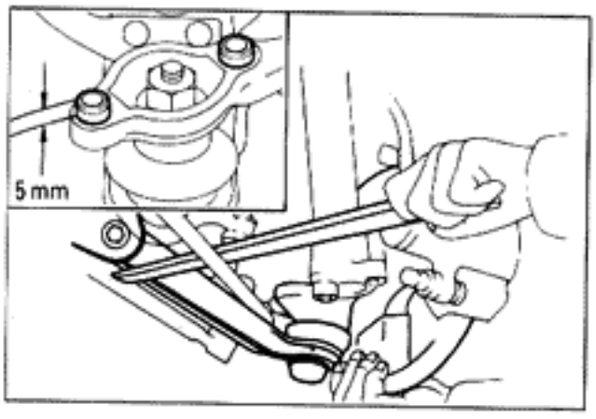

4. REMOVE FRONT SHOCK ABSORBER, FRONT AXLE HUB AND BRAKE CALIPER

NOTE: Collars extend into the steering knuckle bolt holes about 5 mm (0.20 in.) deep.

Push the suspension lower arm down and remove the front shock absorber, front axle hub and brake caliper.

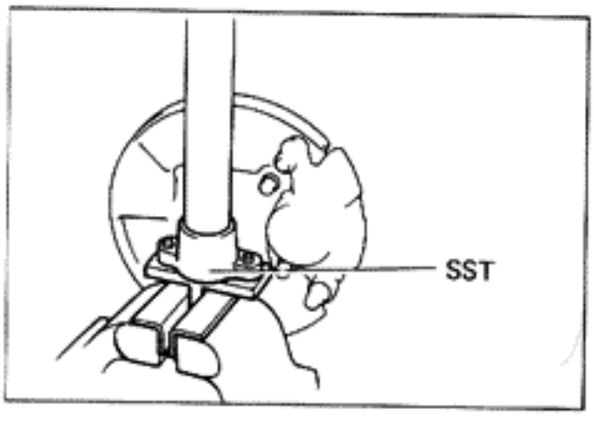

5. MOUNT FRONT SHOCK ABSORBER IN VISE OR LOCKING PLATE (SST)

SST 09720-00011 (09721-00080)

6. REMOVE TWO BRAKE HOSES

7. REMOVE BRAKE CALIPER AND FRONT AXLE HUB
(See page FA-6)

8. REMOVE BACKING PLATE

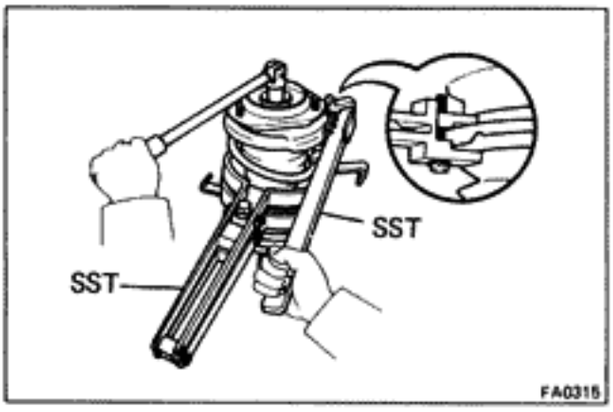

9. REMOVE COIL SPRING

(a) Using SST, compress the coil spring.

SST 09727-22032

(b) Remove the bearing dust cover.

(c) Using SST to hold the support, remove the nut.

SST 09729-22031

(d) Remove the suspension support, dust seal, spring seat, spring bumper.

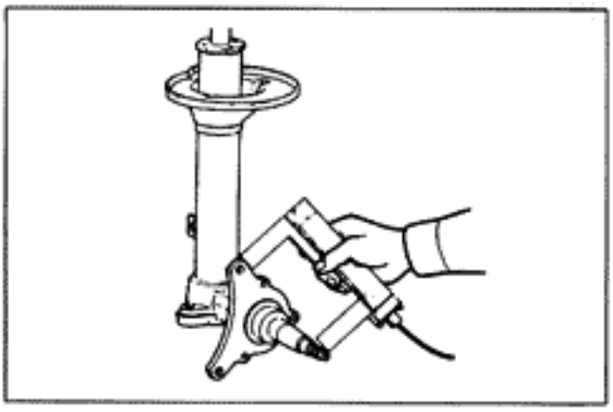

INSPECTION OF FRONT SHOCK ABSORBER ASSEMBLY

1. INSPECT STEERING KNUCKLE PART OF SHOCK ABSORBER

Using a magnetic flaw detector or flaw detecting penetrant, inspect the steering knuckle part of the shock absorber for damage or cracks.

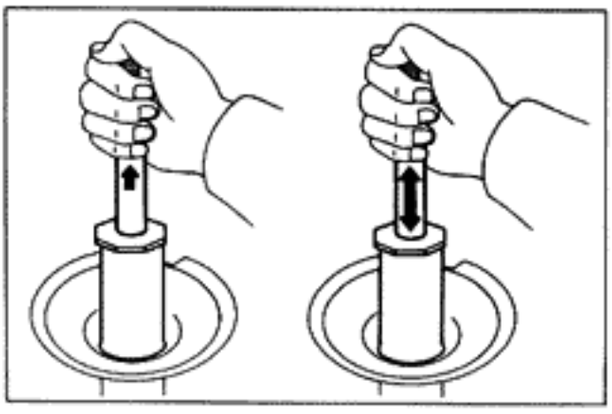

2. INSPECT OPERATION OF SHOCK ABSORBER

(a) Pull out the shock absorber piston rod at a constant speed and check to see that the pull feeling throughout the stroke is the same.

(b) Check to see that there is no change in the pull when the piston rod is suddenly moved up and down with a stroke of 5 – 10 mm (0.20 – 0.39 in.).

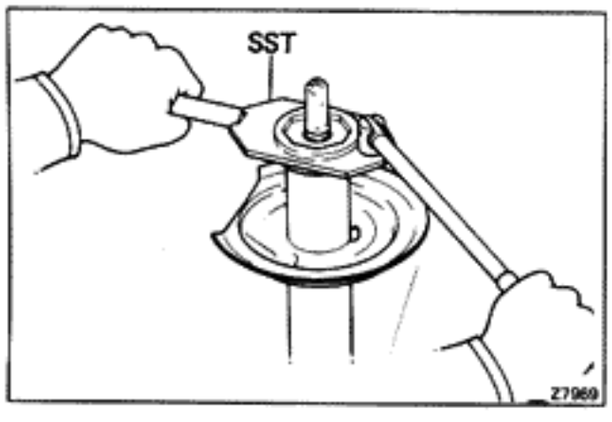

(c) If the absorber operation is defective, use SST to remove the absorber from the outer shell and either replace the cartridge or overhaul it.

SST 09720-00011 (09721-00071)

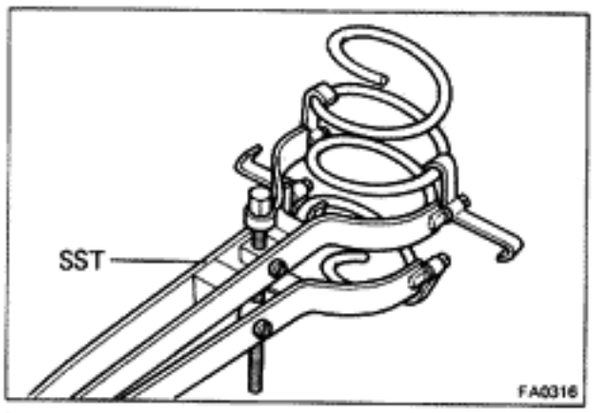

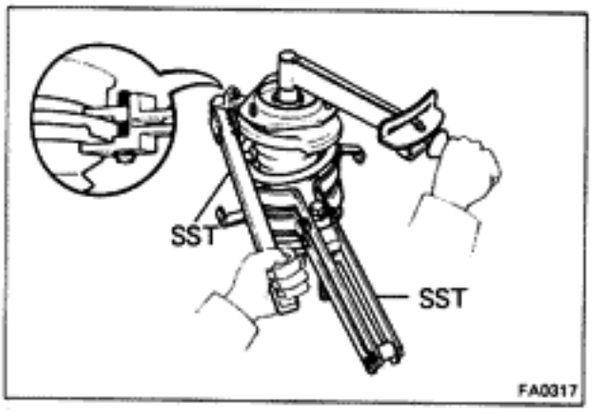

INSTALLATION OF FRONT SHOCK ABSORBER ASSEMBLY

(See page FA-10)

1. INSTALL DUST COVER, COIL SPRING AND SPRING SEAT
   (a) Mount the front shock absorber on a stand.
   (b) Install the bumper to the shock absorber.
   (c) Align the coil spring end with the lower seat hollow and install.
   (d) Align the spring seat with the piston rod and install.
   (e) Install the dust seal.
   (f) Using SST, compress the coil spring.
   SST 09727-22032
2. INSTALL SUSPENSION SUPPORT
   (a) Using SST to hold the support, install the support with a new nut. Torque the nut.
   SST 09729-22031
   Torque: 475 kg-cm (34 ft-lb, 47 N·m)
   (b) Pack the bearing in the suspension support with MP grease.
   (c) Install the bearing dust cover on the suspension support.
3. INSTALL BACKING PLATE AND FRONT AXLE HUB, ADJUST PRELOAD (See page FA-8)
4. INSTALL TWO BRAKE HOSES AND BRAKE CALIPER (See page FA-9)

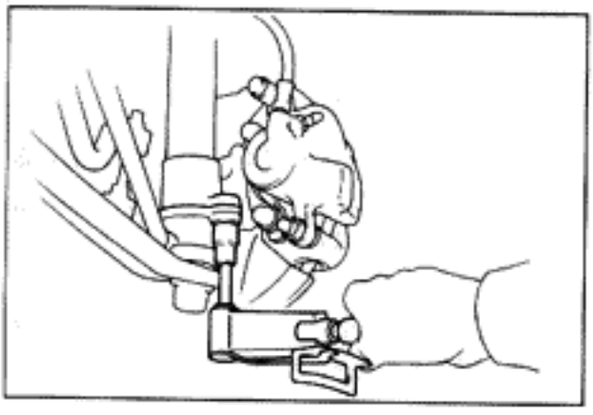

5. CONNECT STEERING KNUCKLE ARM
   Place the shock absorber assembly in position, and connect the knuckle arm with two bolts. Torque the bolts.
   Torque: 1,000 kg-cm (72 ft-lb, 98 N·m)

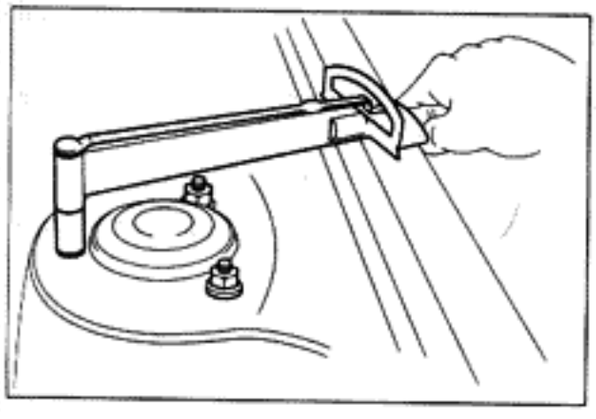

6. INSTALL THREE NUTS
   Install three nuts holding the top of the shock absorber. Torque the nuts.
   Torque: 375 kg-cm (27 ft-lb, 37 N·m)
7. BLEED BRAKE LINES (See page BR-7)
8. CHECK FRONT WHEEL ALIGNMENT AND SIDE SLIP (See page FA-3)

FRONT SUSPENSION

COMPONENTS

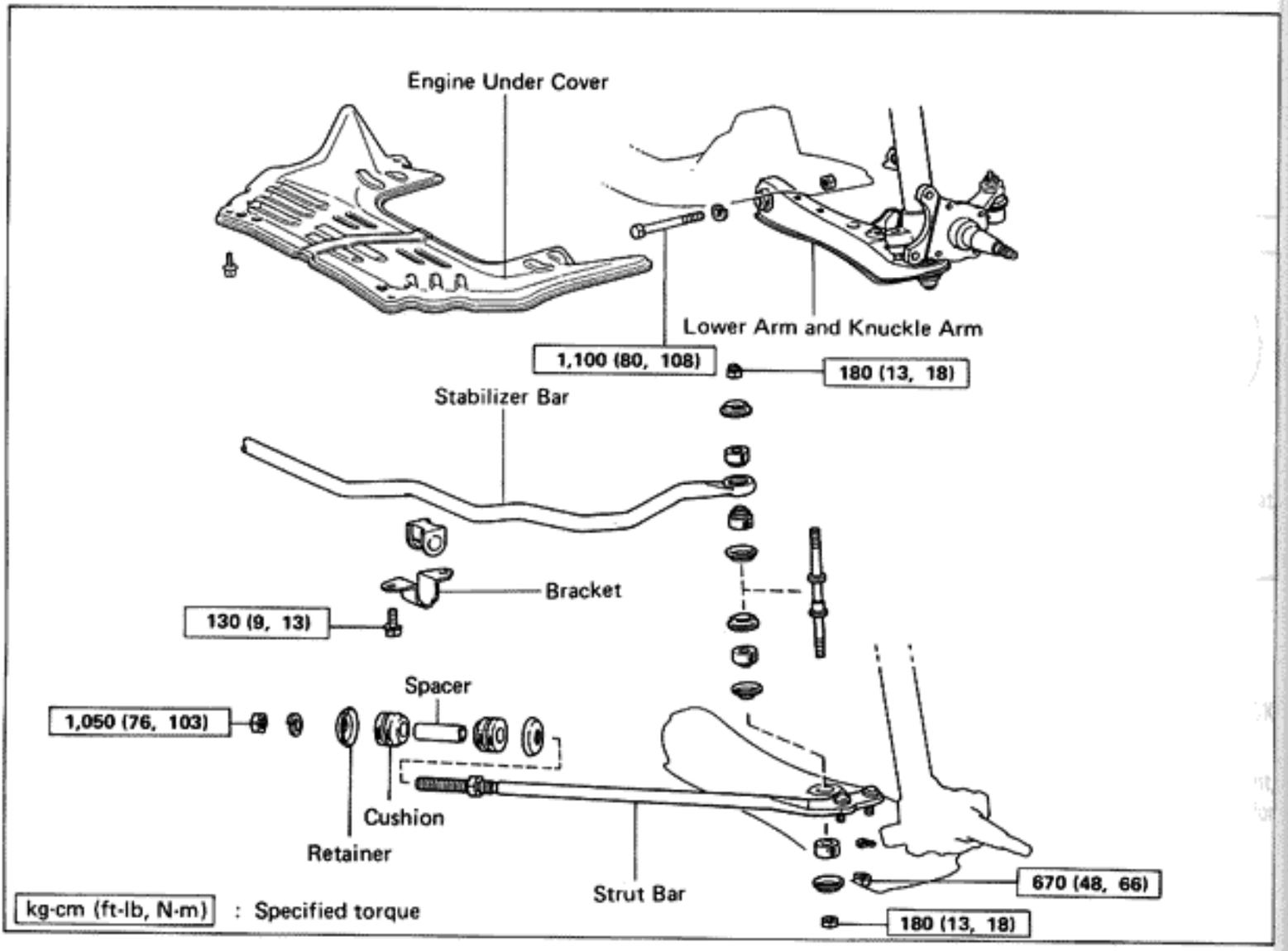

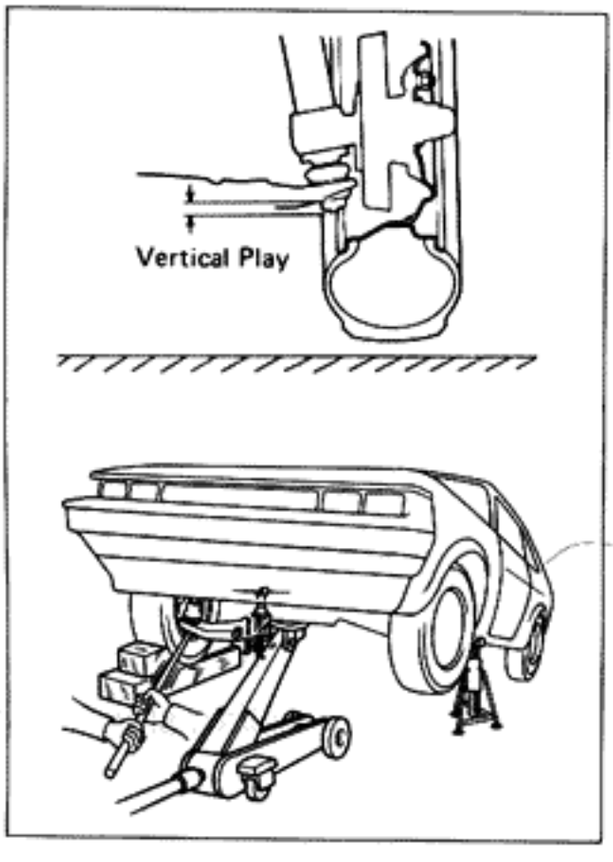

Ball Joints

INSPECTION OF BALL JOINTS

1. INSPECT BALL JOINTS FOR EXCESSIVE LOOSENESS

   (a) Jack up the front of the vehicle and place wooden blocks with a height of 180–200 mm (7.09–7.87 in.) under the one front tire.

   (b) Lower the jack until there is about half a load on the front coil springs. Place stands under the vehicle for safety.

   (c) Make sure the front wheels are in a straight forward position and block them with chocks.

   (d) Move the lower arm up and down and check that the ball joint has no excessive play.

   Maximum ball joint vertical play: 2.5 mm (0.098 in.)

   (e) Inspect the ball joint on the opposite side in the same manner. [steps (a) through (d)]

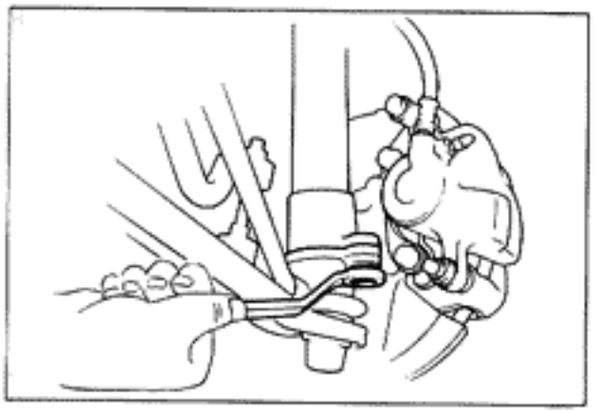

Lower Arm

(See page FA-14)

REMOVAL OF LOWER ARM

1. DISCONNECT KNUCKLE ARM FROM SHOCK ABSORBER
   (a) Remove two bolts holding the knuckle arm to the shock absorber.
   (b) Push the lower arm down, and disconnect the shock absorber from the knuckle arm.

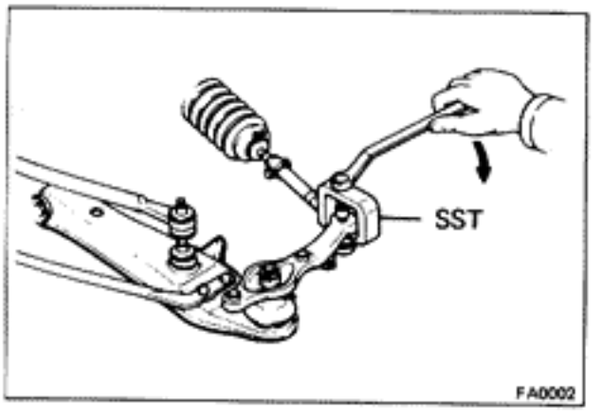

2. DISCONNECT KNUCKLE ARM FROM TIE ROD
   (a) Remove the cotter pin and nut holding the knuckle arm to the tie rod.
   (b) Using SST, disconnect the knuckle arm from the tie rod.

   SST 09611-22012

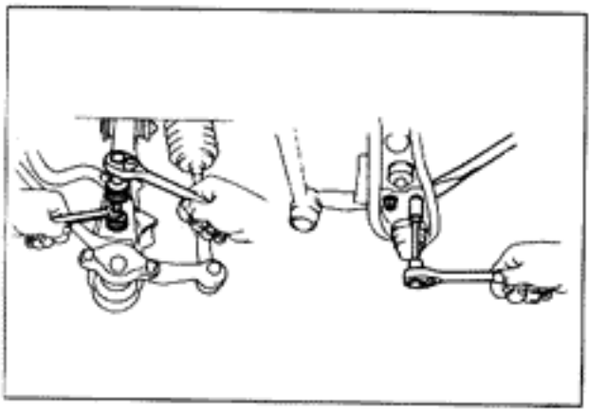

3. DISCONNECT STABILIZER BAR AND STRUT BAR FROM LOWER ARM
   (a) Remove the nut holding the stabilizer bar to the lower arm and disconnect the stabilizer bar.
   (b) Remove the nuts holding the strut bar to the lower arm and disconnect the strut bar.

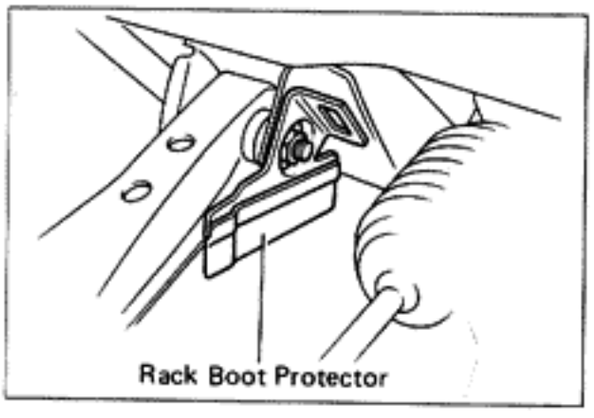

4. REMOVE LOWER ARM AND RACK BOOT PROTECTOR

   Remove the bolt holding the lower arm to the cross-member and remove the lower arm and the rack boot protector.

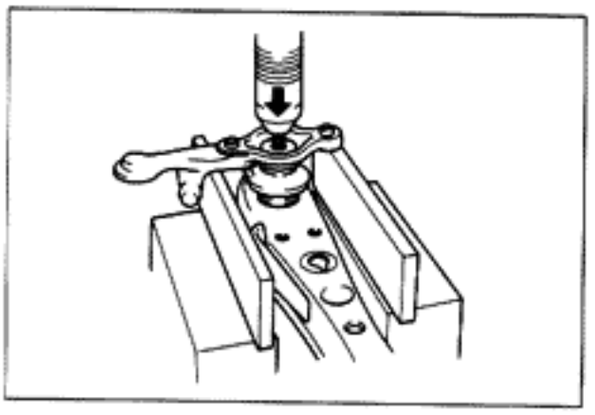

5. DISCONNECT KNUCKLE ARM FROM LOWER ARM
   (a) Remove the cotter pin and nut holding the knuckle arm to the ball joint.
   (b) Using a press, disconnect the knuckle arm from the lower arm.

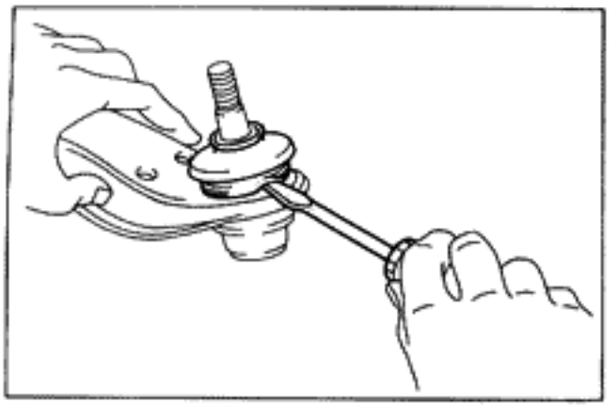

REPLACEMENT OF LOWER ARM DUST COVER

1. REMOVE DUST COVER

Remove the dust cover set ring and dust cover.

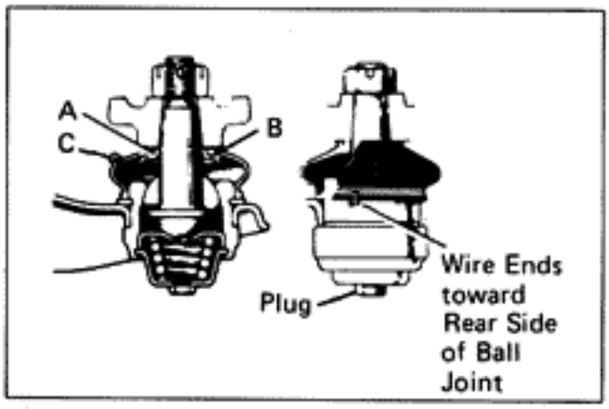

2. INSTALL DUST COVER

(a) Apply ball joint grease to section "A" and "B" of a new dust cover.

(b) Install the dust cover with the escape valve "C" facing the rear of car.

(c) Wind wire twice around the dust cover and bend the wire knot down.

(d) Remove the plug and install the grease fitting.

(e) Fill with ball joint grease.

Molybdenum Disulphide Lithium Base Grease:

NLGI No. 1 or No. 2

(f) Remove the grease fitting and install the plug.

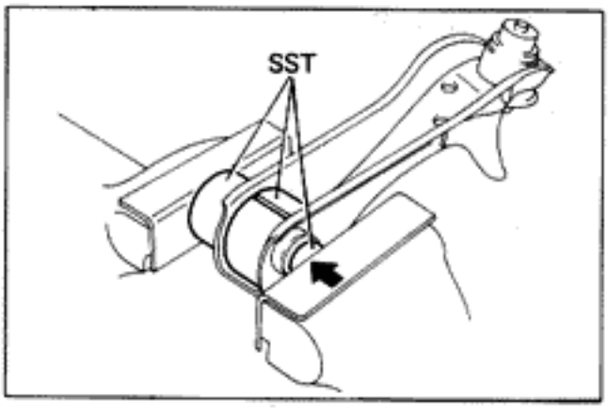

REPLACEMENT OF LOWER ARM BUSHING

1. REMOVE LOWER ARM BUSHING

Using SST, press out the bushing from the lower arm.

SST 09726-12022
(09726-01030, 09726-01040, 09726-01010)

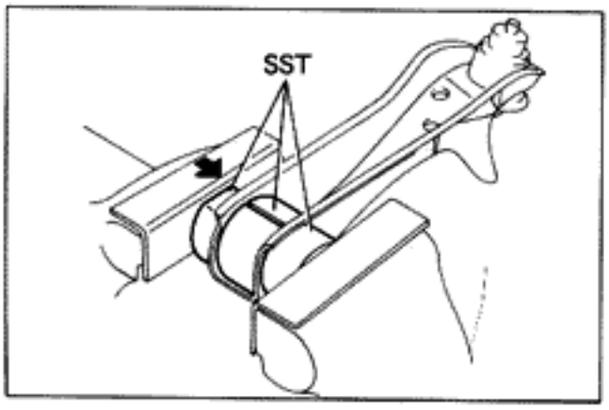

2. INSTALL LOWER ARM BUSHING

Using SST, press the bushing into the lower arm.

SST 09726-12022
(09726-01030, 09726-01040, 09726-01020)

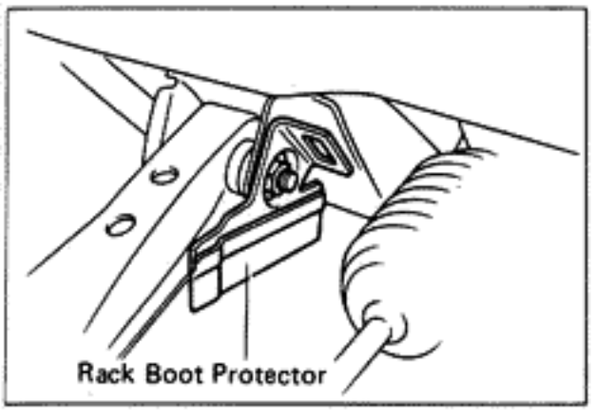

INSTALLATION OF LOWER ARM

1. INSTALL LOWER ARM IN CROSSMEMBER

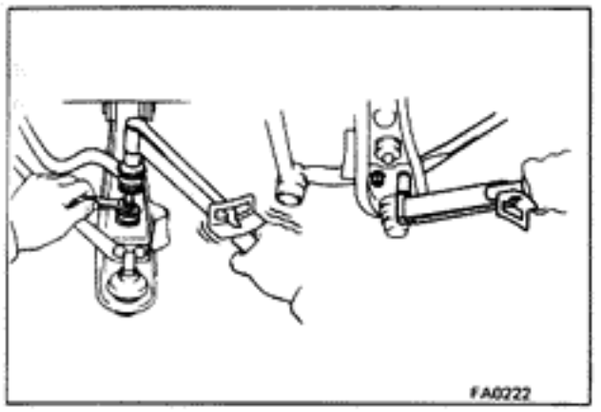

2. CONNECT STABILIZER BAR AND STRUT BAR TO LOWER ARM

(a) Connect the stabilizer bar to the lower arm with the bolt and nut. Torque the nut.

Torque: 180 kg-cm (13 ft-lb, 18 N·m)

(b) Connect the strut bar to the lower arm with the two nuts. Torque the nuts.

Torque: 670 kg-cm (48 ft-lb, 66 N·m)

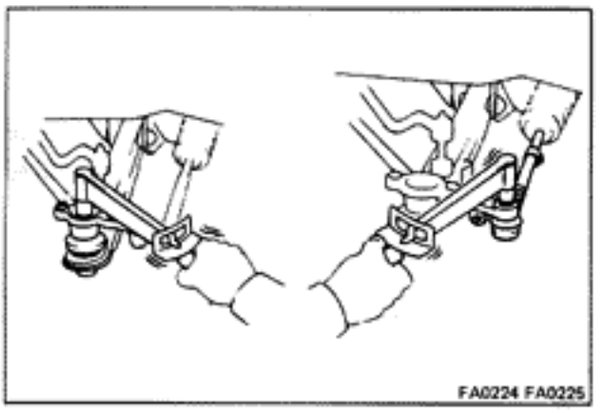

3. CONNECT KNUCKLE ARM TO BALL JOINT AND TIE ROD

(a) Install the knuckle arm on the ball joint with a nut. Torque the nut and install a new cotter pin.

Torque: 800 kg-cm (58 ft-lb, 78 N·m)

(b) Install the knuckle arm on the tie rod with a nut. Torque the nut and install a new cotter pin.

Torque: 600 kg-cm (43 ft-lb, 59 N·m)

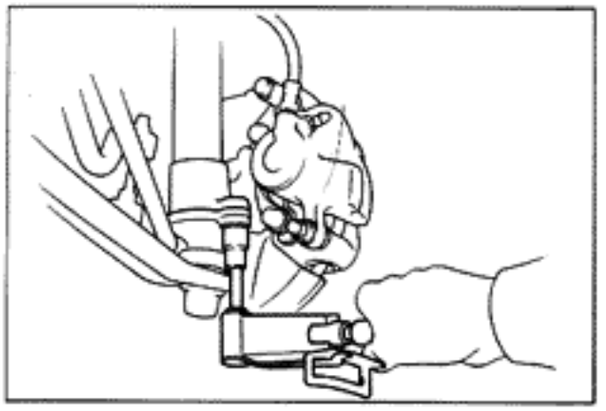

4. CONNECT KNUCKLE ARM TO SHOCK ABSORBER

Place the shock absorber assembly in position and connect the knuckle and with the two bolts. Torque the bolts.

Torque: 1,000 kg-cm (72 ft-lb, 98 N·m)

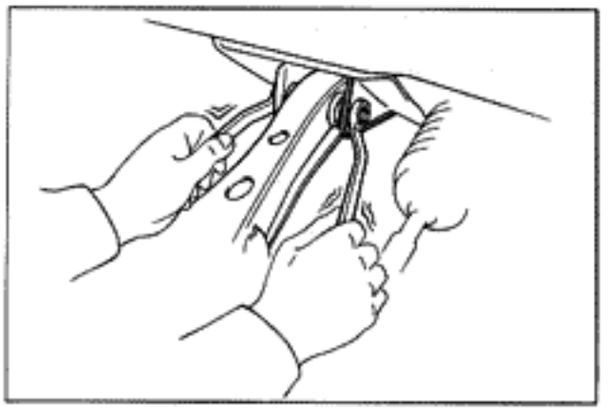

5. INSTALL TIRE AND LOWER VEHICLE

6. TORQUE BOLT HOLDING LOWER ARM TO CROSSMEMBER

After bouncing the vehicle to settle the suspension, torque the bolt.

Torque: 1,100 kg-cm (80 ft-lb, 108 N·m)

7. CHECK FRONT WHEEL ALIGNMENT AND SIDE SLIP
(See page FA-3)

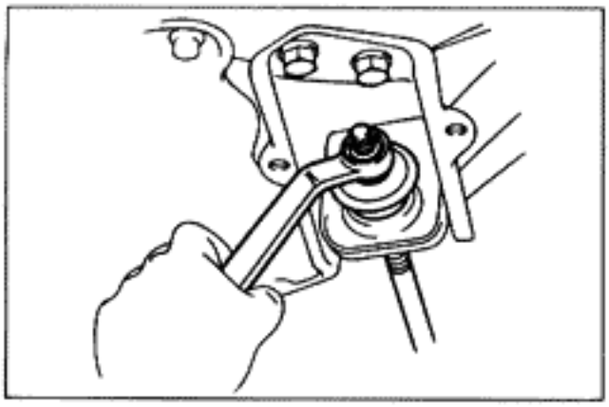

Strut Bar

(See page FA-14)

REMOVAL OF STRUT BAR

1. REMOVE STRUT BAR FROM BRACKET

Remove the nut and strut bar from the bracket.

NOTE: Do not remove the staked nut.

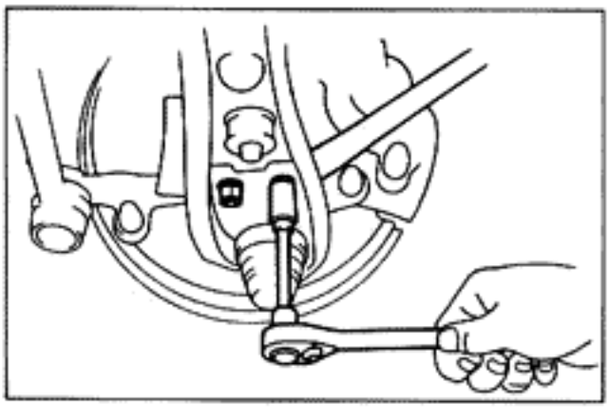

2. REMOVE STRUT BAR FROM LOWER ARM

Jack up the lower arm and disconnect the strut bar. Remove the bolt holding the strut bar to the lower arm, and disconnect the strut bar.

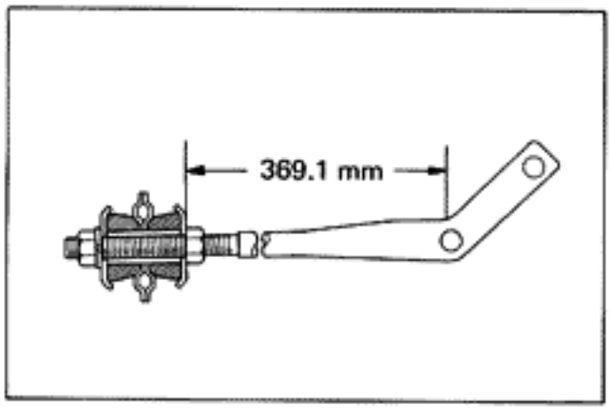

INSTALLATION OF STRUT BAR

1. ADJUST STAKED NUT

Check that the distance between the staked nut and center of the bolt hole is 369.1 mm (14.531 in.). Adjust staked nut as necessary.

NOTE: Do not move staked nut unless required.

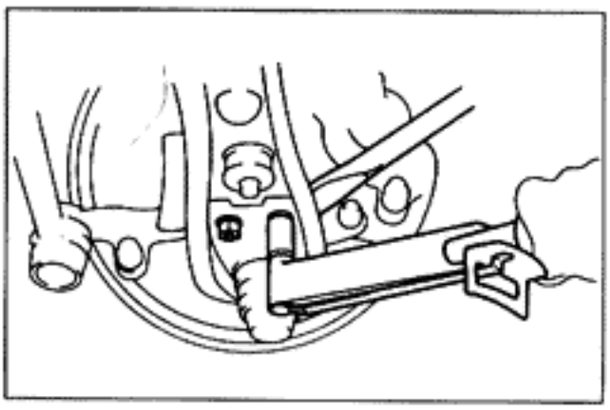

2. CONNECT STRUT BAR TO LOWER ARM

Connect the strut bar to the lower arm with a bolt. Torque the bolt.

Torque: 670 kg-cm (48 ft-lb, 66 N·m)

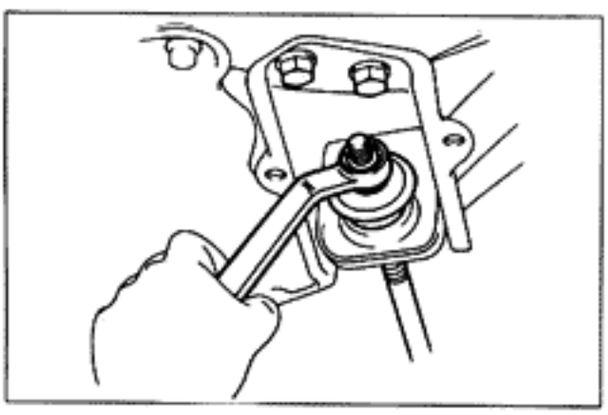

3. CONNECT STRUT BAR TO BRACKET

Connect the strut bar to the bracket with a nut. Torque the nut.

Torque: 1,050 kg-cm (76 ft-lb, 103 N·m)

4. CHECK FRONT WHEEL ALIGNMENT AND SIDE SLIP

(See page FA-3)

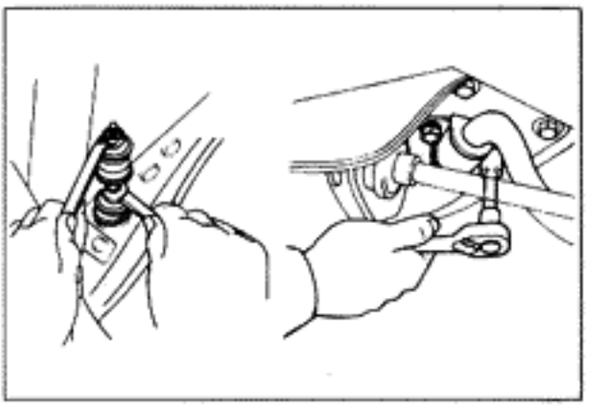

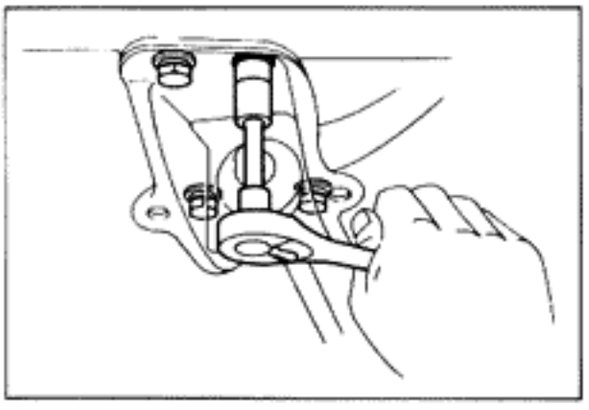

Stabilizer Bar

(See page FA-14)

REMOVAL OF STABILIZER BAR

1. REMOVE ENGINE UNDER COVER
2. DISCONNECT STABILIZER BAR FROM LOWER ARMS
3. REMOVE BOTH STABILIZER BAR BRACKETS FROM STRUT BAR BRACKETS
4. REMOVE STRUT BAR WITH STRUT BAR BRACKET ON ONE SIDE
   (a) Remove the two nuts, and disconnect the strut bar from the lower arm.
   (b) Remove the four strut bar bracket bolts.
5. REMOVE STABILIZER BAR
   Pull out the stabilizer bar through the strut bar bracket hole.

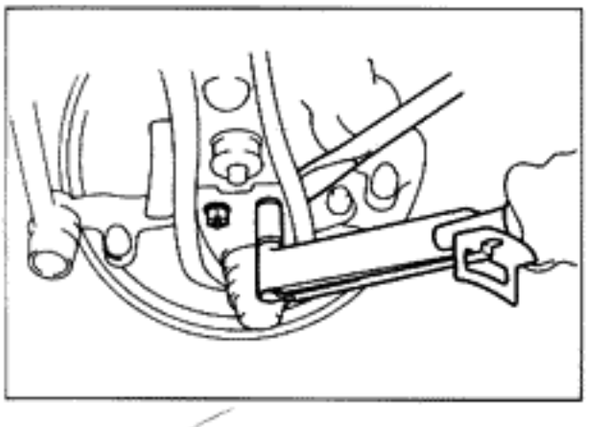

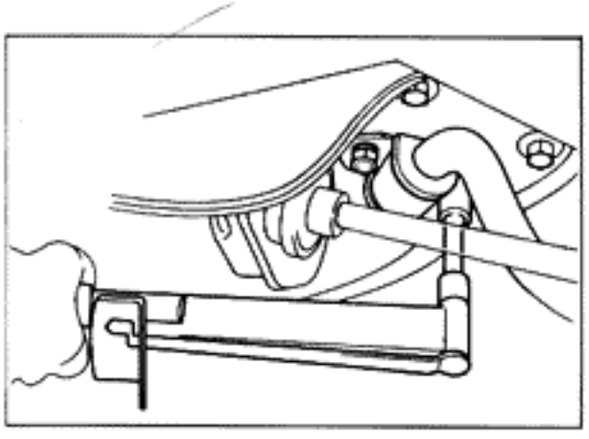

INSTALLATION OF STABILIZER BAR

1. INSERT STABILIZER BAR THROUGH STRUT BAR BRACKET HOLE
2. INSTALL STRUT BAR BRACKET
   Install the strut bar bracket and torque the bolts.
   Torque: 475 kg-cm (34 ft-lb, 47 N·m)
3. INSTALL STRUT BAR TO LOWER ARM
   Install the strut bar and torque the nuts.
   Torque: 670 kg-cm (48 ft-lb, 66 N·m)
4. INSTALL STABILIZER BAR ON BRACKETS
   Place the stabilizer bar in position and install both stabilizer bushings and brackets on the strut bar brackets. Torque the bolts.
   Torque: 130 kg-cm (9 ft-lb, 13 N·m)

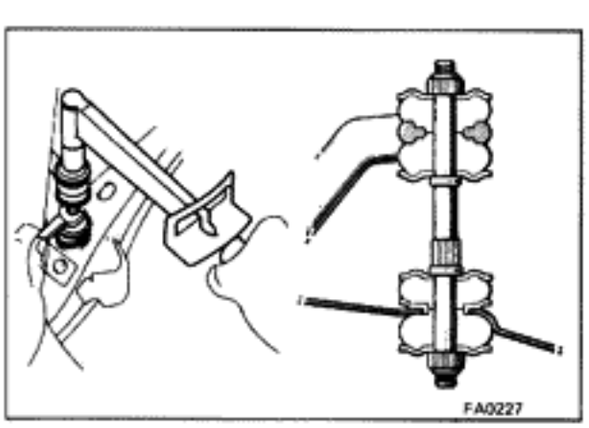

5. CONNECT STABILIZER BAR TO LOWER ARMS
   Connect the stabilizer bar on both sides to the lower arms with bolts, cushions and nuts as shown. Torque the nuts.
   Torque: 180 kg-cm (13 ft-lb, 18 N·m)
6. INSTALL ENGINE UNDER COVER
7. CHECK FRONT WHEEL ALIGNMENT
   (See page FA-3)

REAR AXLE AND SUSPENSION

	Page
TROUBLESHOOTING	RA-2
REAR WHEEL ALIGNMENT	RA-3
IRS TYPE REAR AXLE SHAFT	RA-5
REAR DRIVE SHAFT	RA-12
IRS TYPE DIFFERENTIAL	RA-18
LIMITED SLIP DIFFERENTIAL	RA-37
IRS TYPE REAR SUSPENSION	RA-44
DIFFERENTIAL SUPPORT MEMBER	RA-53

TROUBLESHOOTING

Problem	Possible cause	Remedy	Page
Oil leak at rear axle	Oil seals worn or damaged	Replace oil seal	RA-5
	Bearing retainer loose	Replace retainer	
	Rear axle housing cracked	Repair as necessary	
Oil leak at pinion shaft	Oil level too high or wrong grade	Drain and replace oil	
	Oil seal worn or damaged	Replace oil seal	RA-19
	Companion flange loose or damaged	Tighten or replace flange	RA-19
Oil leak at side gear shaft	Oil level too high or wrong grade	Drain and replace oil	
	Oil seal worn or damaged	Replace oil seal	RA-18
	Side gear shaft loose or damaged	Tighten or replace shaft	RA-18
Noises in rear axle	Oil level low or wrong grade	Drain and replace oil	
	Excessive backlash between pinion and ring or side gear	Check backlash	RA-23
	Ring, pinion or side gears worn or chipped	Inspect gears	RA-24
	Pinion shaft bearing worn	Replace bearing	RA-26
	Axle shaft bearing worn	Replace bearing	RA-5
	Differential bearing loose or worn	Tighten or replace bearings	RA-26
Bottoming	Vehicle overloaded	Check loading	
	Shock absorber worn out	Replace shock absorber	RA-45
	Springs weak	Replace spring	RA-45

REAR WHEEL ALIGNMENT

1. MAKE FOLLOWING CHECKS AND CORRECT ANY PROBLEMS

(a) Check the tires for wear and proper inflation.

Cold tire inflation pressure: kg/cm² (psi, kPa)

Tire	Front	Rear
225/60 HR 14	1.9 (27,186)	1.9 (27,186)

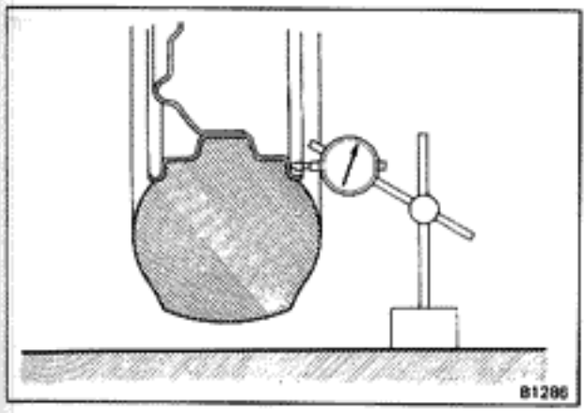

(b) Check the rear wheel bearings for looseness.

(c) Check wheel runout.

Lateral runout: Less than 1.0 mm (0.039 in.)

(d) Check the rear suspension for looseness.

(e) Check that the rear absorbers work properly by the standard bounce test.

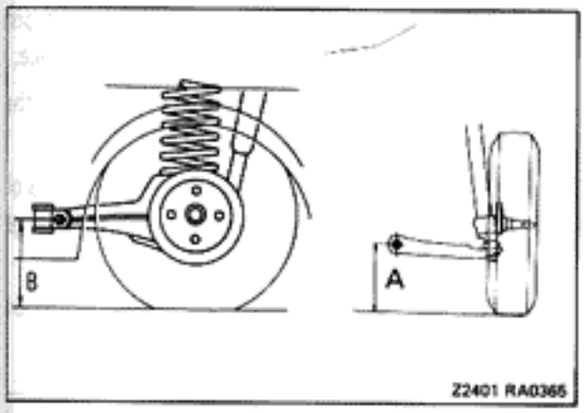

2. MEASURE VEHICLE HEIGHT

Vehicle height mm (in.)

Tire	Front (A)	Rear (B)
225/60 HR 14	223.0 (8.780)	263.0 (10.354)

If height of the vehicle is not as specified, try to level the vehicle by shaking it down. If the height of the vehicle is still not correct, check for bad springs and worn or loose suspension parts.

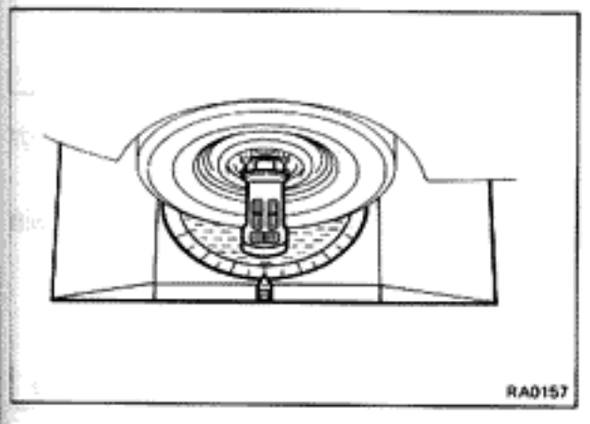

3. INSTALL WHEEL ALIGNMENT EQUIPMENT

Follow the specific instructions of the equipment manufacturer.

4. INSPECT CAMBER

Inspect the camber with a wheel alignment tester.

Inspection standard: −10′ ± 45′
Adjustment standard: −10′ ± 30′
Left-right error 20′

If camber is out of tolerance, inspect and replace damaged or worn rear suspension parts.

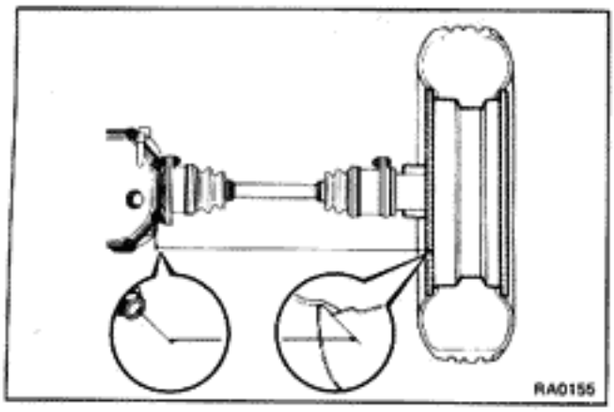

5. ADJUST TOE-IN

(a) Measure the distance between each disc wheel and the differential carrier cover bolt of the suspension member and confirm that both are the same.

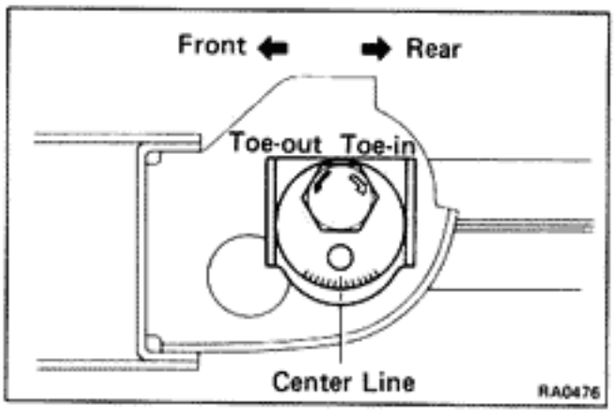

(b) If the distances are not the same but within 5 mm (0.20 in.), adjust with the toe-in adjusting bolt.

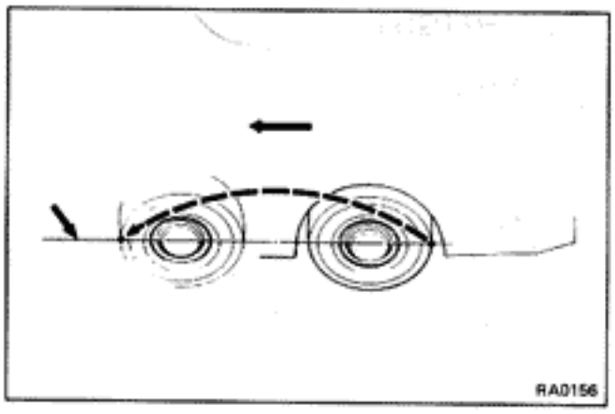

(c) Move the vehicle forward a few meters with the front wheels in the straight-ahead position on a level place.

(d) Mark on each center of rear tread and measure the distance between marks of the right and left tires.

(e) Advance the vehicle till the marks on the rear sides of the tires come to the measuring heights of the gauge on the front sides.

NOTE: Toe-in should be measured at the same point on the tire and at the same level.

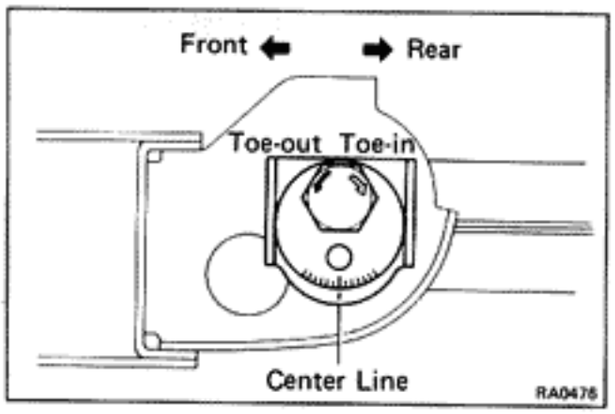

	Inspection standard	Adjustment standard
Toe-in	0 ± 2 mm (0 ± 0.08 in.)	0 ± 1 mm (0 ± 0.04 in.)

(f) If not within specification, turn the left and right adjusting bolts an equal amount to adjust.

NOTE: The toe-in will change about 1 mm (0.04 in.) with each graduation of the cam (one side).

(g) Tighten the bolts after adjustment the toe-in.

Torque: 1,325 kg-cm (96 ft-lb, 130 N·m)

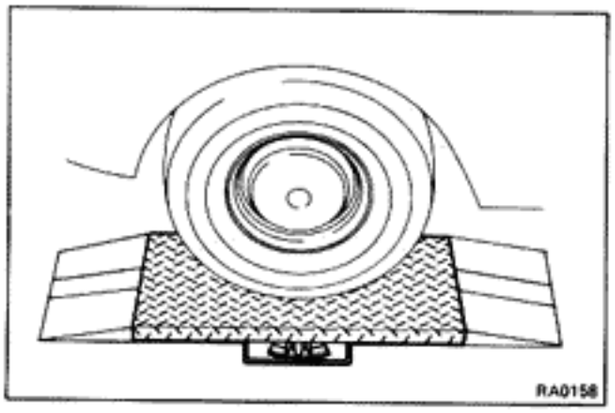

6. INSPECT SIDE SLIP WITH SIDE SLIP TESTER

Side slip limit: Less than 3.0 mm per meter (0.118 in. per 3.3 ft)

If the side slip exceeds this limit, the toe-in or camber may not be correct.

IRS TYPE REAR AXLE SHAFT

COMPONENTS

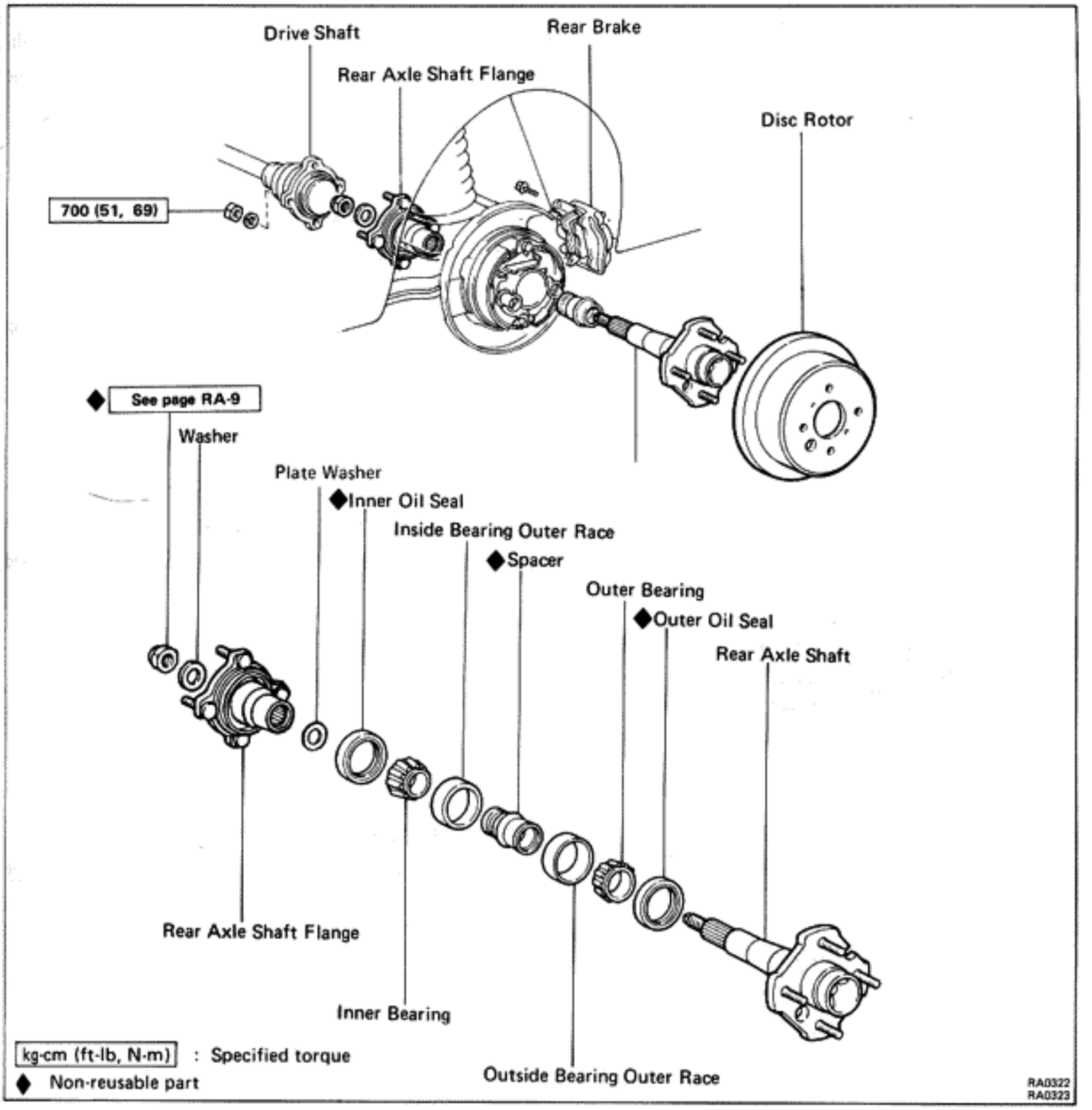

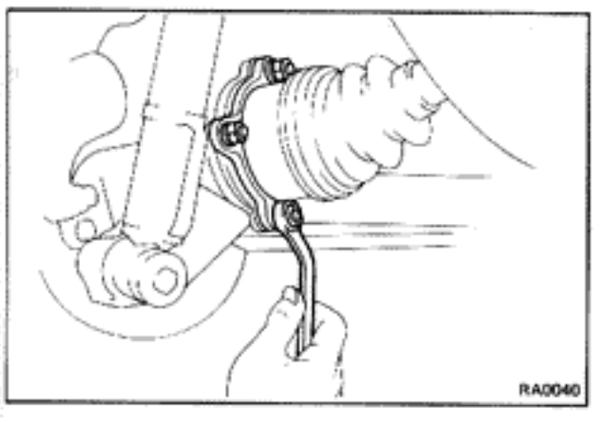

REMOVAL OF REAR AXLE SHAFT

1. **REMOVE REAR WHEEL**
2. **DISCONNECT DRIVE SHAFT**
   NOTE: Disconnect the rear axle shaft side only.
3. **REMOVE REAR BRAKE**
   Remove the brake caliper and disc rotor.

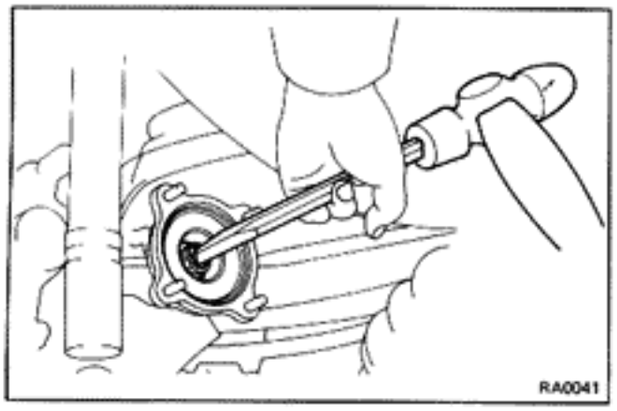

4. REMOVE AXLE FLANGE NUT

(a) Using a hammer and chisel, loosen the staked part of the nut.

(b) Remove the nut and washer.

NOTE: Be sure to remove the washer from the axle shaft. If not, the axle flange cannot be removed with SST in the next step.

SST 09557-22022

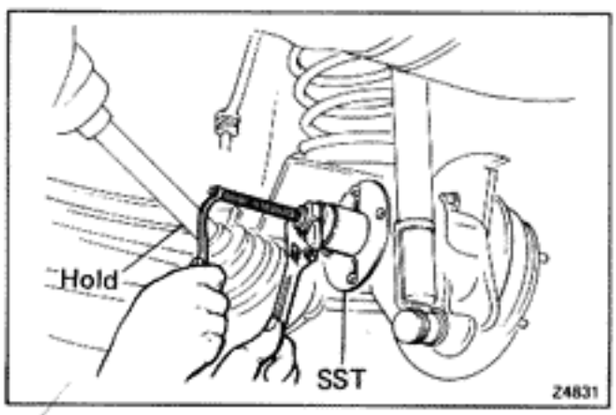

5. REMOVE AXLE FLANGE

Using SST, disconnect the axle flange and the washer.

SST 09557-22022

NOTE: Be careful not to lose the plate washer on the tip of the flange bearing side.

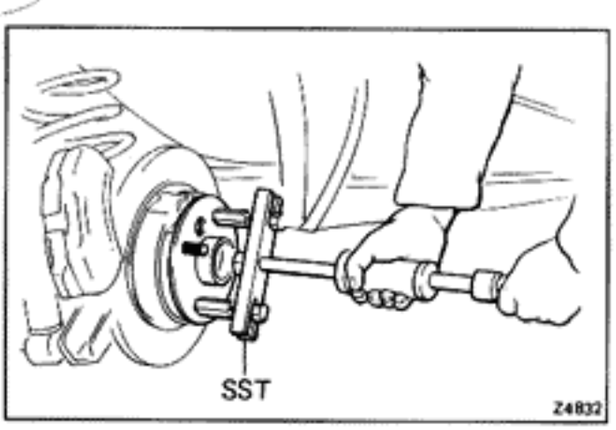

6. REMOVE REAR AXLE SHAFT AND SPACER

Using SST, pull out the rear axle shaft with the oil seal and outer bearing.

SST 09520-00031

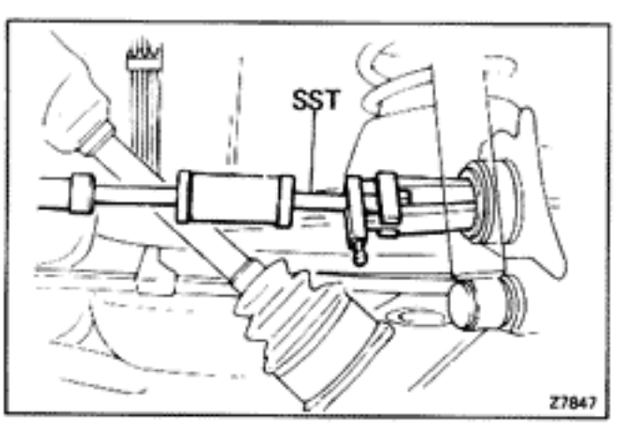

7. REMOVE INNER OIL SEAL AND BEARING

(a) Using SST, pull out the inner oil seal from rear axle housing.

SST 09308-00010

(b) Remove the inner bearing.

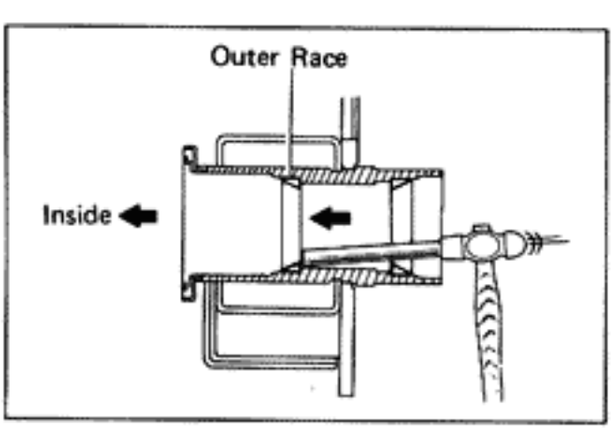

8. REMOVE INSIDE BEARING OUTER RACE

(a) Using a brass bar, remove the bearing outer race from the rear axle housing.

(b) If necessary, replace the outer race.

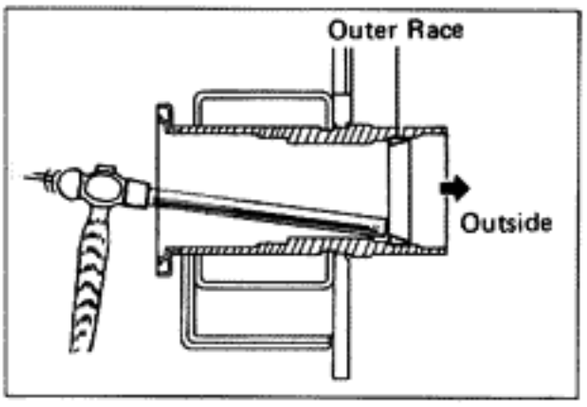

9. REMOVE OUTSIDE BEARING OUTER RACE

Using a brass bar, remove the axle shaft outer bearing race from the axle housing.

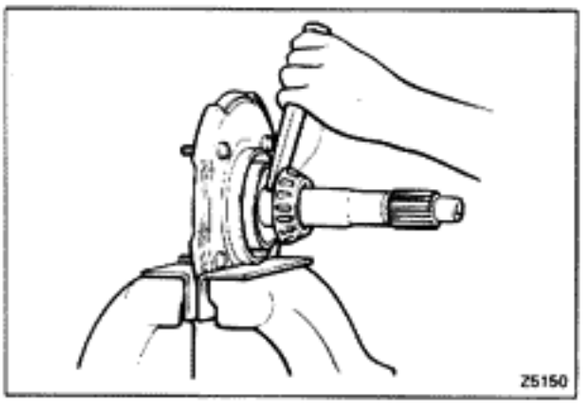

10. REMOVE OUTSIDE BEARING AND OIL SEAL

(a) Using a chisel, open a clearance between the hub and bearing.

CAUTION: Be careful not to damage the bearing or shaft.

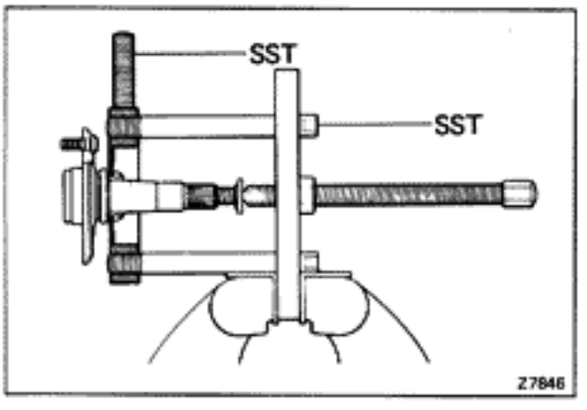

(b) Using SST, remove the outer bearing from the rear axle shaft.

SST 09950-00020 and 09950-00030

(c) Remove the oil seal from axle shaft.

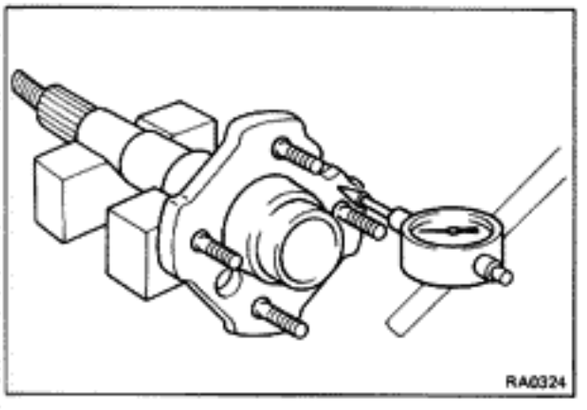

INSPECTION AND REPLACEMENT OF REAR AXLE SHAFT COMPONENTS

1. INSPECT REAR AXLE SHAFT AND FLANGE FOR WEAR, DAMAGE OR RUNOUT

Maximum flange runout: 0.1 mm (0.004 in.)

If the rear axle flange is damaged or worn, or if runout is greater than maximum, replace the rear axle shaft.

2. CLEAN AND INSPECT BEARINGS AND RACES

(a) Clean with solvent and dry with low-pressure compressed air.

(b) Inspect inner and outer bearings and races for wear or damage.

If a bearing or race requires replacement, it must be replaced as a set with the appropriate bearing or race.

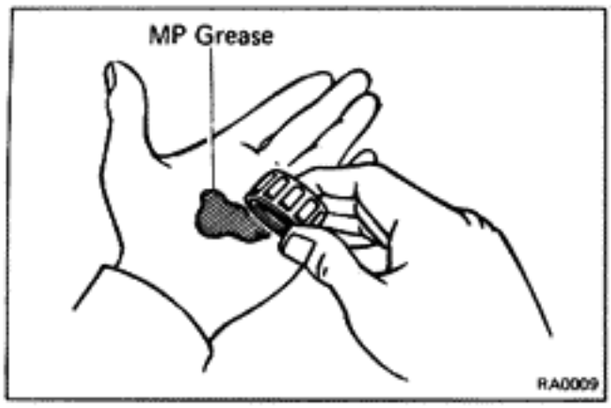

3. PACK BEARINGS WITH MP GREASE NO. 2

- Use a pressure bearing lubricator if available.

OR

- Place bearings in a handful of grease. Force grease into the bearing until completely filled.

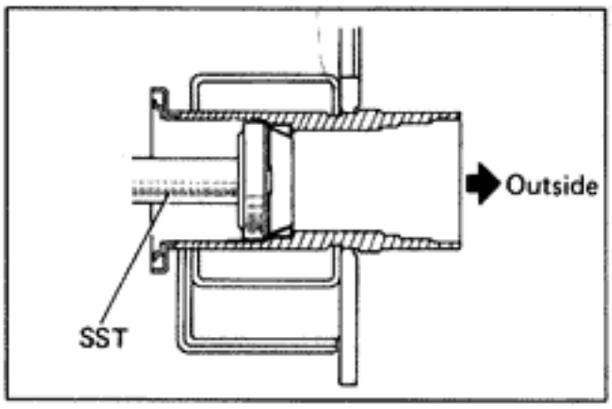

4. INSTALL INSIDE BEARING OUTER RACE

(a) Using SST, install the bearing inside outer race in the rear axle housing.

SST 09550-22011 (09550-00020, 09550-00040)

(b) Install the bearing.

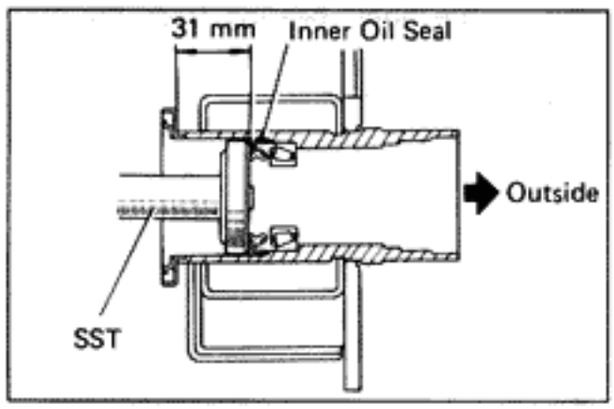

5. INSTALL NEW INNER OIL SEAL

(a) Using SST, drive in a new oil seal to a depth of 31 mm (1.22 in.).

SST 09550-22011 (09550-00020, 09550-00040)

(b) Apply MP grease No. 2 to the oil seal lip.

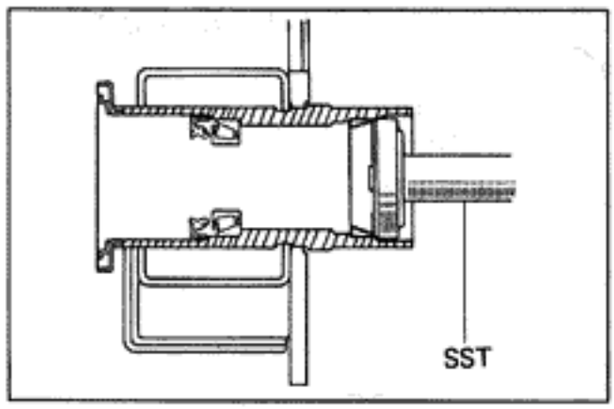

6. INSTALL OUTSIDE BEARING OUTER RACE

Using SST, install the bearing outside outer race in the rear axle housing.

SST 09550-22011 (09550-00020, 09550-00050)

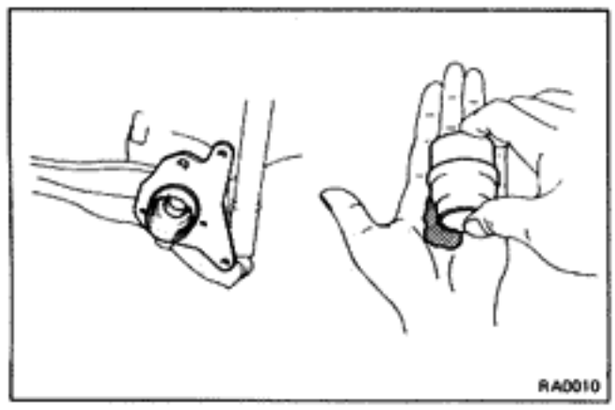

7. PACK INSIDE OF REAR AXLE HOUSING WITH MP GREASE NO. 2

8. COAT OUTSIDE OF NEW SPACER WITH MP GREASE NO. 2

9. INSTALL NEW SPACER INTO HUB

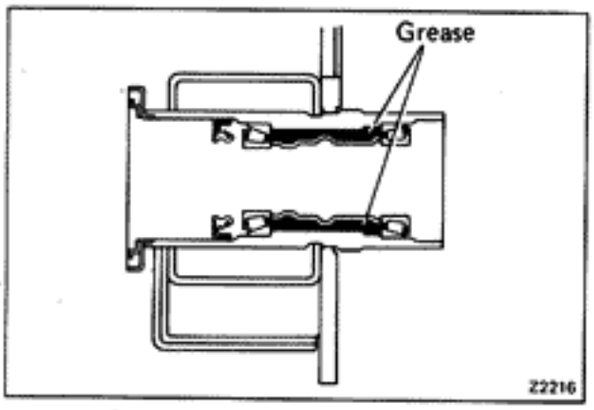

10. INSTALL NEW OUTER BEARING AND NEW OUTER OIL SEAL

(a) Install the bearing.

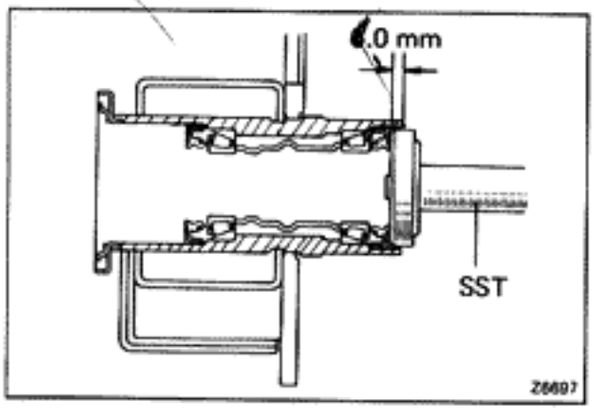

(b) Using SST, drive in a new oil seal to a depth of 6.0 mm (0.236 in.).

SST 09950-22011 (09550-00020, 09550-00050)

(c) Apply MP grease No. 2 to the oil seal lip.

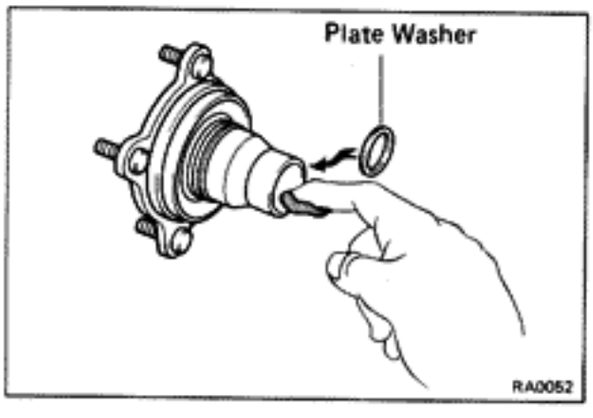

INSTALLATION OF REAR AXLE SHAFT

(See page RA-5)

1. INSTALL REAR AXLE SHAFT AND FLANGE

(a) Install the rear axle shaft into the housing.

(b) Install the flange with plate washer.

NOTE: Before assembly, apply a thin coat of grease to the flange.

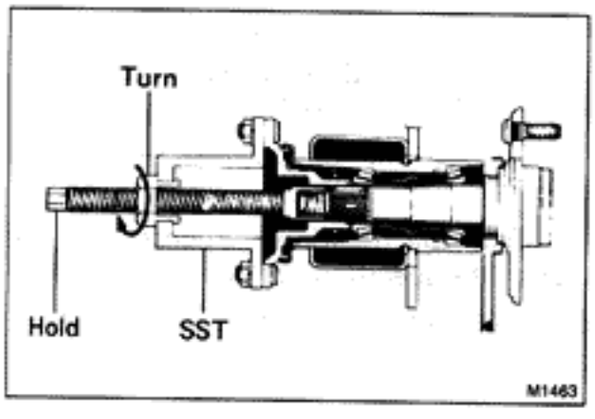

(c) When installing the axle shaft and flange, use SST and tighten to the point where the flange and shaft deflector tip are aligned.

SST 09557-22022

NOTE: Do not allow grease to get on the shaft threads.

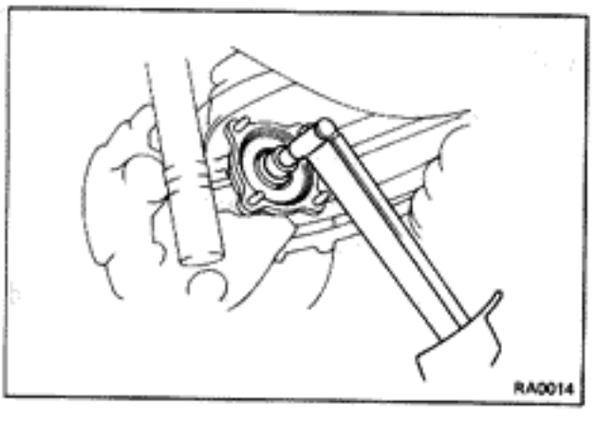

2. ADJUST PRELOAD

(a) Install the new axle shaft flange nut.

(b) Using a bar to hold the shaft, tighten and torque the nut.

Torque: 400 kg-cm (29 ft-lb, 39 N·m)

NOTE: Check that the rear axle shaft has axial play.

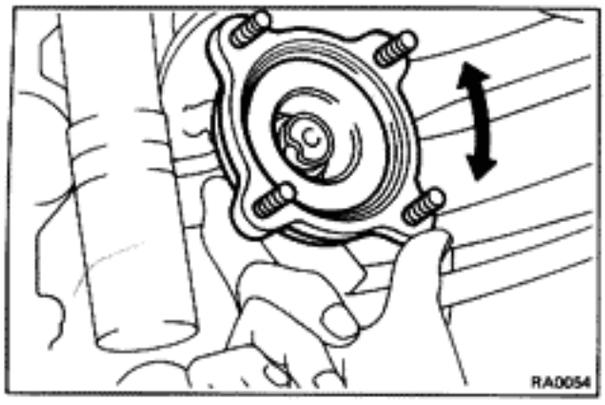

(c) Revolve the shaft back and forth to snug it down.

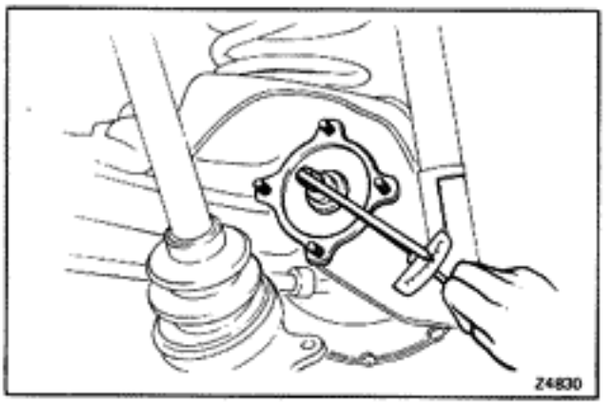

(d) Measure the rotation torque (initial resistance) while turning the side gear shaft.

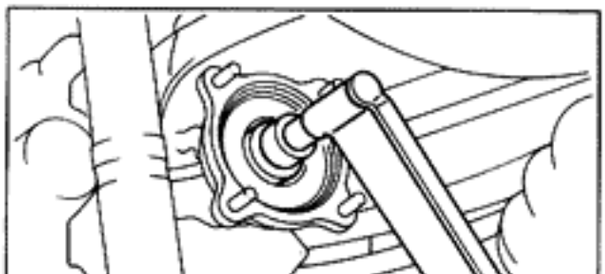

(e) Torque the nuts.

Torque: 800 kg-cm (58 ft-lb, 78 N·m)

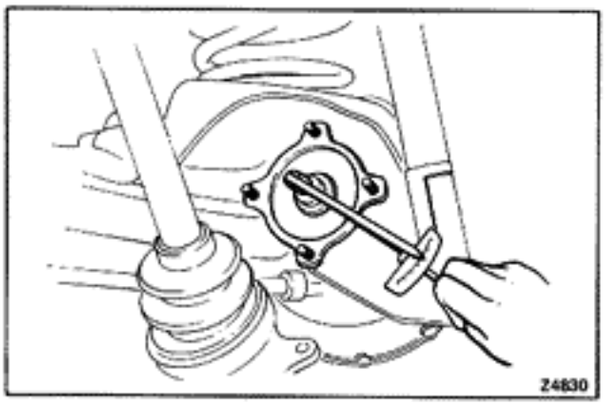

(f) Using a torque wrench, check the preload rotation.

Preload (rotation): Add initial resistance torque
1 – 4 kg-cm (0.9 – 3.5 in.-lb, 0.1 – 0.4 N·m)

NOTE: Turn the flange one turn per 6 seconds and measure the preload.

If preload is less than specification, retighten the nut 5 – 10° at a time until the specified preload is reached.

Maximum torque: 2,000 kg-cm (145 ft-lb, 196 N·m)

3. **IF THERE IS EXCESS PRELOAD, CORRECT IN FOLLOWING PROCEDURE**
   (a) Remove the axle flange.
   (b) Remove the rear axle shaft and spacer.
   (c) Remove the outside bearing and oil seal.
   (d) Install the outer bearing and oil seal.
   (e) Install the rear axle shaft, new bearing spacer and flange.
   (f) Readjust preload.

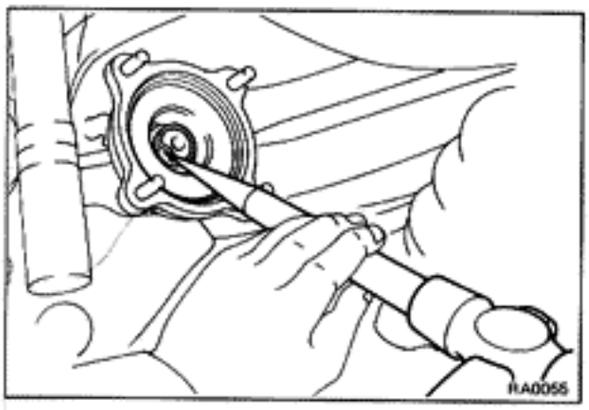

4. STAKE NUT WITH PUNCH
5. INSTALL REAR BRAKE
6. CONNECT DRIVE SHAFT
   Torque: 700 kg-cm (51 ft-lb, 69 N·m)
7. INSTALL REAR WHEEL

REAR DRIVE SHAFT

COMPONENTS

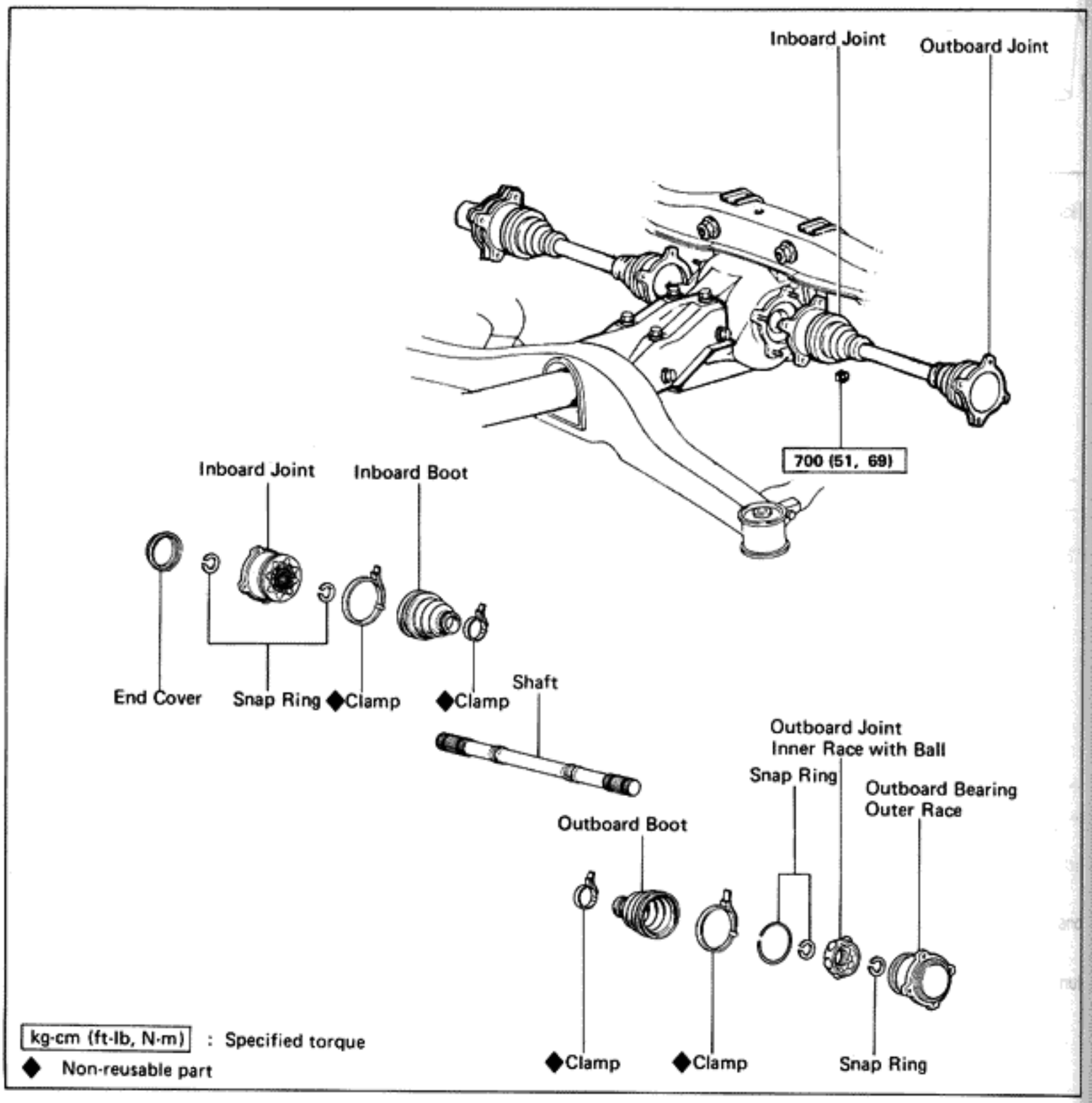

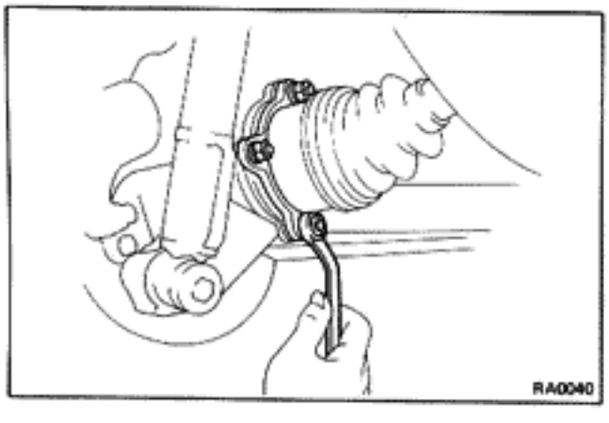

REMOVAL OF REAR DRIVE SHAFT

REMOVE DRIVE SHAFT

NOTE: Be careful not to damage the boots.

(a) Disconnect the drive shaft from the differential.

(b) Disconnect the drive shaft from the axle shaft.

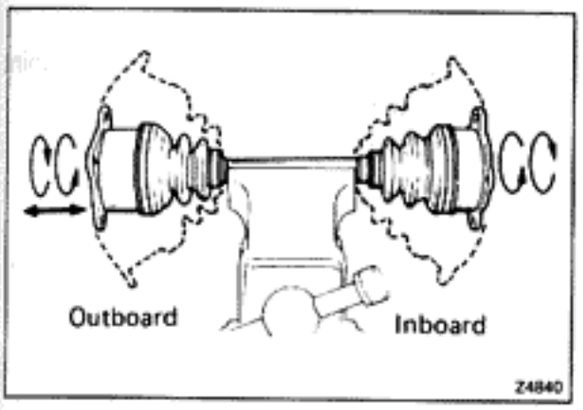

DISASSEMBLY OF REAR DRIVE SHAFT

1. CHECK BOOT AND CLAMP

(a) Check to see that the outboard joint slides smoothly in the thrust direction.
Check to see that there is no remarkable play in the radial direction of the outboard joint.

(b) Check to see that there is no remarkable play in the radial direction of the inboard joint.

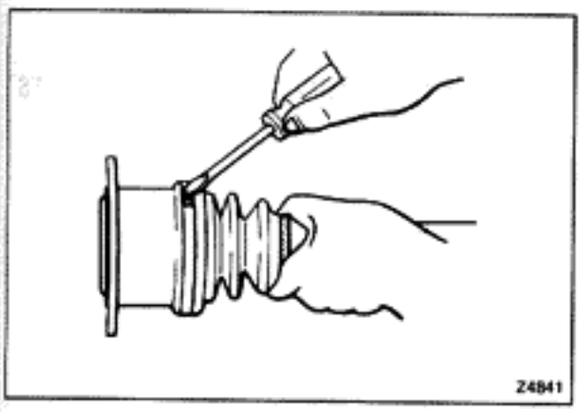

2. DISASSEMBLE FOUR BOOT CLAMPS OF OUTBOARD AND INBOARD JOINTS

NOTE: Slide the clamp toward the drive shaft and remove it.

3. SLIDE BOOTS AT CENTER OF SHAFT

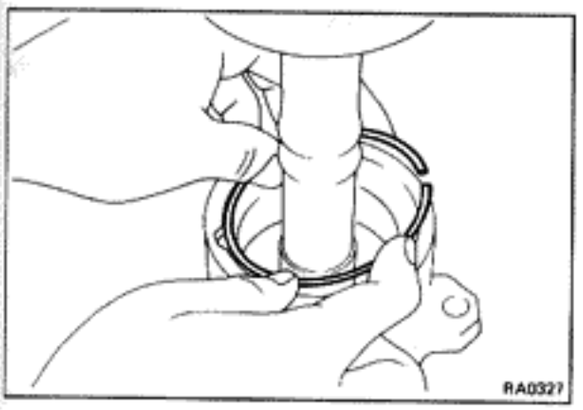

4. REMOVE OUTBOARD JOINT OUTER RACE

(a) Remove the snap ring.

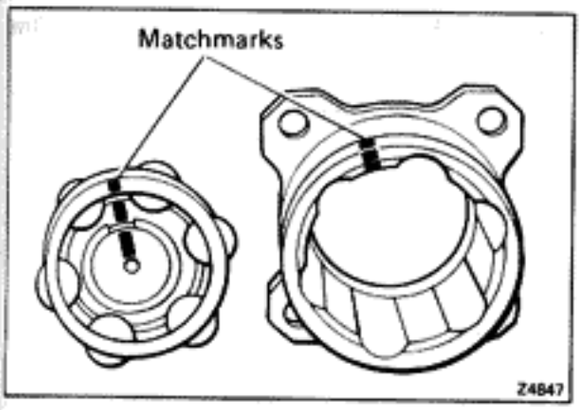

(b) Place matchmarks on the outer race and drive shaft.

NOTE: Do not use a punch.

(c) Remove the outer race to the drive shaft.

NOTE: If the end cover is damaged or worn, replace it.

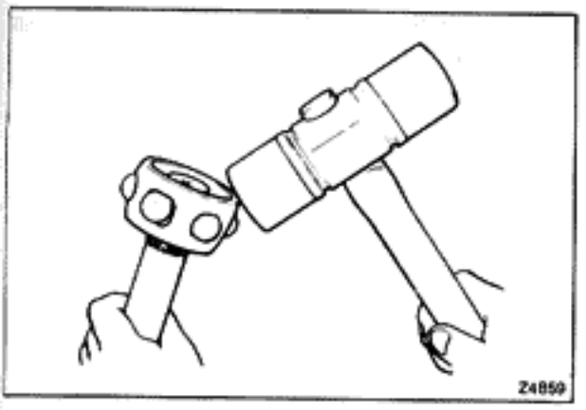

5. REMOVE OUTBOARD JOINT INNER RACE

(a) Using a plastic hammer, remove the balls by lightly tapping on the outer circumference of the cage in the shaft axial direction.

(b) Lower the cage to the inboard side.

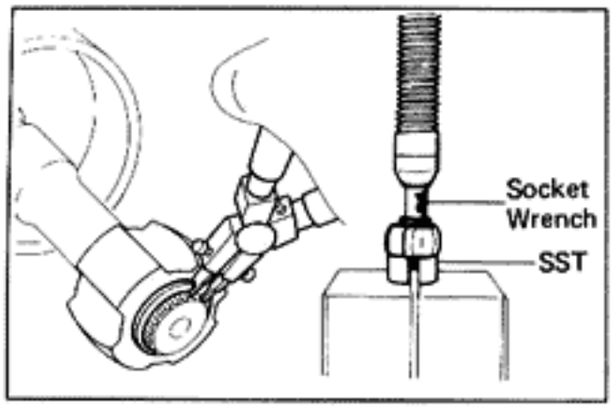

(c) Using snap ring pliers, remove the snap ring.

(d) Using SST and a press, remove the outboard joint inner race from the drive shaft.

SST 09726-10010 (09726-00030)

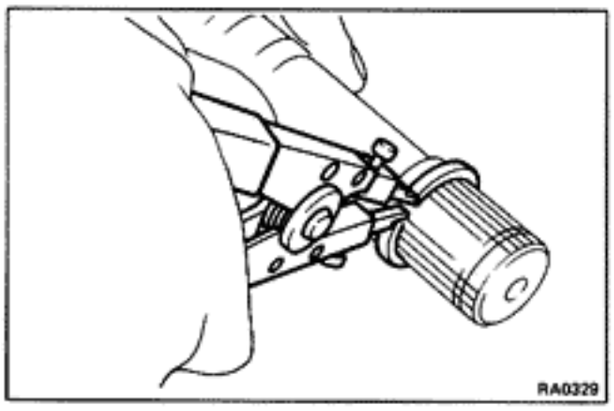

(e) Using snap ring pliers, remove the snap ring.

6. REMOVE OUTBOARD AND INBOARD JOINT BOOTS

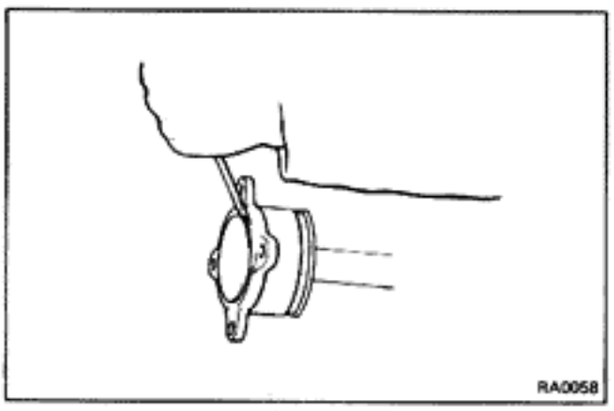

7. DISASSEMBLE INBOARD JOINT

(a) Using a screwdriver, remove the end plate from the inboard joint.

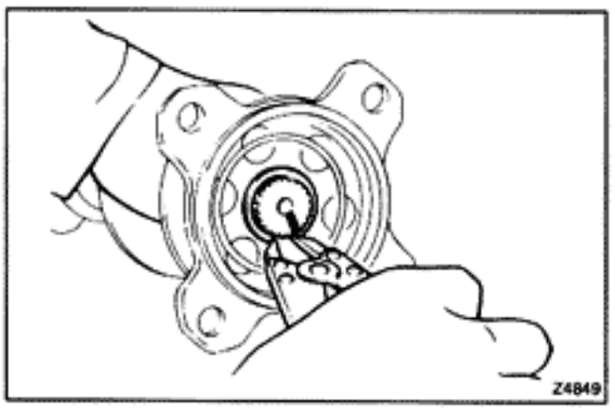

(b) Place matchmarks on the inboard joint and drive shaft.

(c) Using snap ring pliers, remove the snap ring.

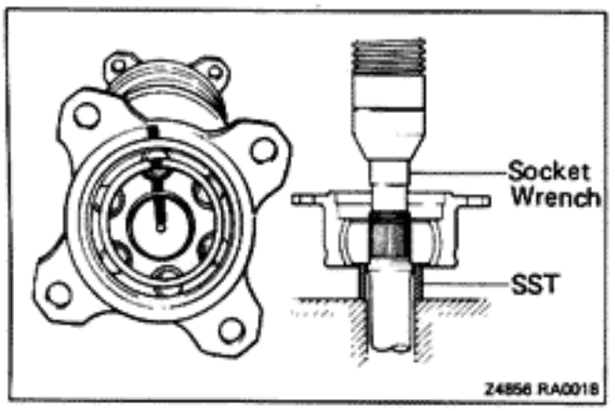

(d) Using SST and a press, remove the inboard joint from the drive shaft.

SST 09726-10010 (09726-00030)

INSPECTION OF REAR DRIVE SHAFT COMPONENTS

1. AFTER REMOVAL CHECK BOOTS FOR DAMAGE
2. CLEAN ALL PARTS
3. CHECK ALL PARTS FOR CRACKS, WEAR OR DAMAGE AND REPLACE AS NECESSARY

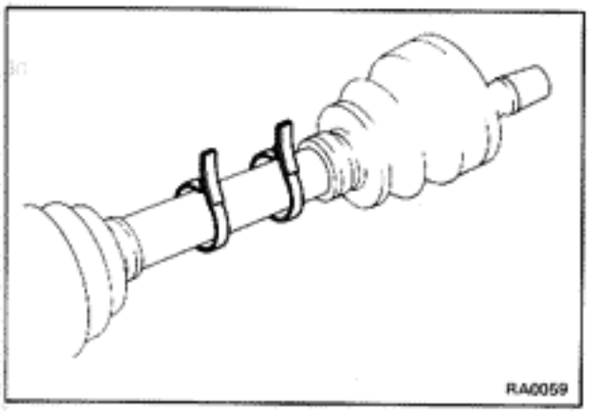

ASSEMBLY OF REAR DRIVE SHAFT

(See page RA-12)

1. ASSEMBLE NEW CLAMPS ONTO DRIVE SHAFT

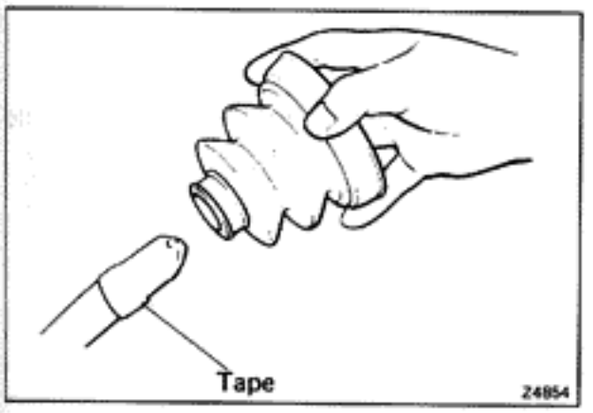

2. ASSEMBLE BOOT ONTO DRIVE SHAFT

CAUTION: Wrap the shaft serrations with vinyl tape so as to prevent damage to the boot.

(a) Place the outboard and inboard boots and new clamps on the shaft.

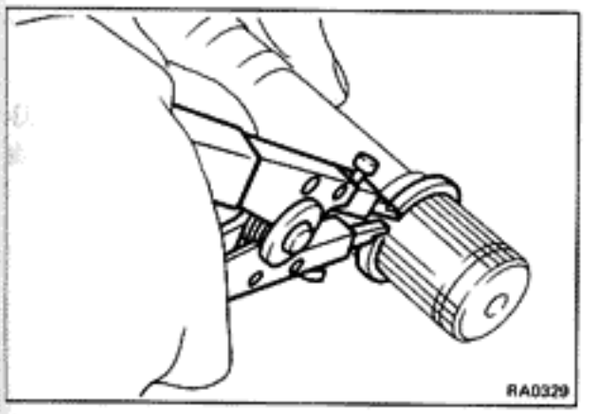

(b) Install a new snap ring.

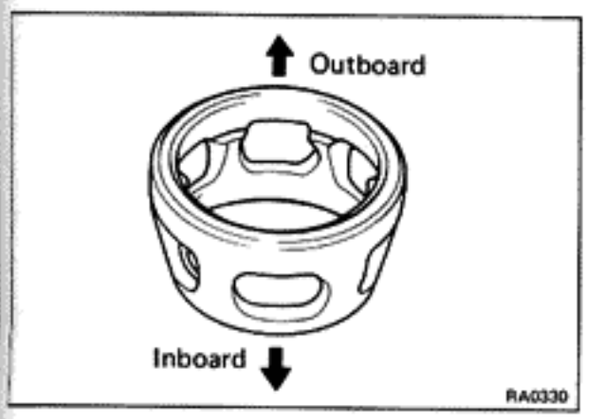

3. INSTALL OUTBOARD JOINT INNER RACE

(a) Place the cage onto shaft.

NOTE: The larger diameter end should face toward the outboard side.

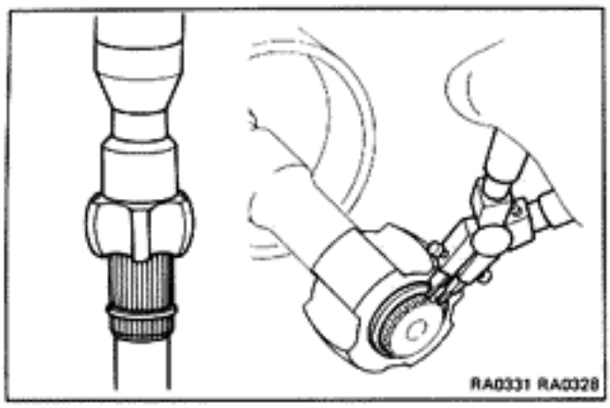

(b) Align the matchmarks and, using a press and socket wrench, install the inner race onto the shaft.

(c) Using snap ring pliers, install the snap ring.

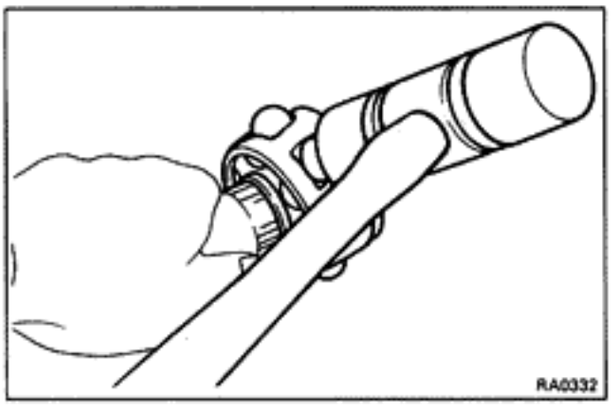

(d) Lightly tap in the balls with a plastic hammer.

NOTE: Coat the inner race, the cage and balls with the grease supplied in the boot kit.

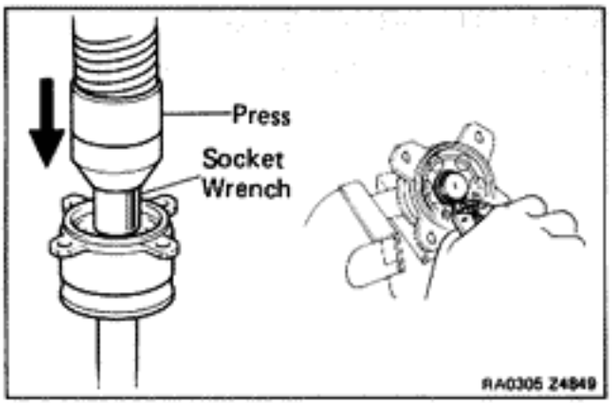

4. ASSEMBLE INBOARD JOINT

(a) Align the matchmarks placed before assembly.

(b) Using a press and socket wrench, inboard joint onto drive shaft.

(c) Using snap ring pliers, install new snap ring.

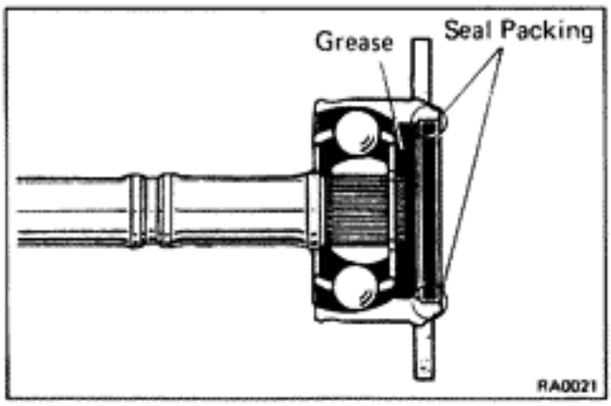

(d) Pack 60g (0.13 lb) of grease into the flange side.

NOTE: Use the grease supplied in the kit.

(e) Apply seal packing THREE BOND 1344 (08833-00080) or LOCKTITE No. 242 around inboard side of the end plate.

(f) Install it to the inboard joint.

NOTE: Install the end plate by tapping around it.

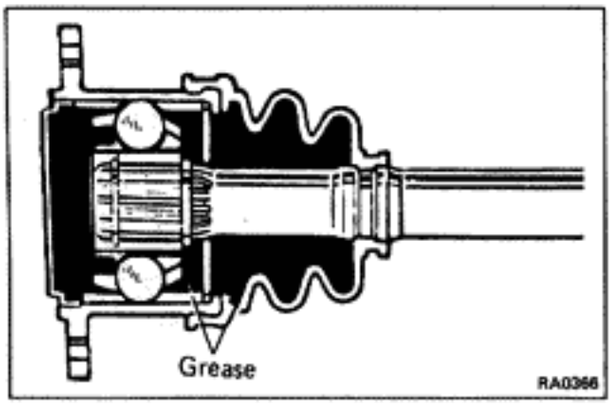

5. APPLY GREASE OUTBOARD AND INBOARD

NOTE: Use the grease supplied in the boot kit.

(a) Apply grease into the outer race and boot.

Outer race: Pack in 60g (0.13 lb) of grease
Outboard boot: Pack in 60g (0.13 lb) of grease

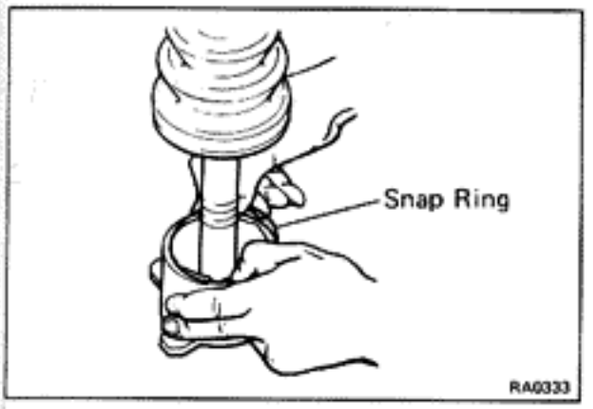

(b) Install the snap ring to the outer race.

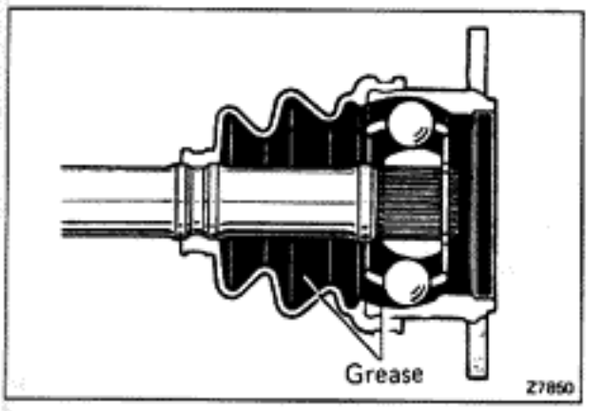

(c) Apply grease into the inboard joint.

Inboard joint: Pack in 60g (0.13 lb) of grease

Inboard boot: Pack in 60g (0.13 lb) of grease

NOTE: Use the grease supplied in the boot kit.

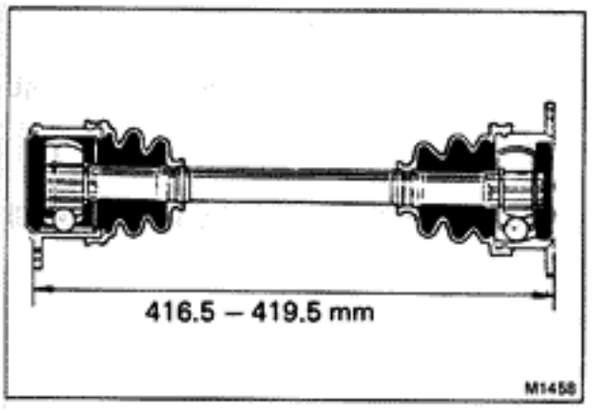

6. ASSEMBLY BOOT CLAMPS

(a) Clamp the boots in a position permitting the following shaft dimension.

Shaft dimension: 416.5 – 419.5 mm (16.398 – 16.516 in.)

(b) Lock the clamps.

NOTE: Position the lock between the flange bolt holes.

(c) Turn both joints and stretch the boot to check that it does not deform.

INSTALLATION OF REAR DRIVE SHAFT

(See page RA-12)

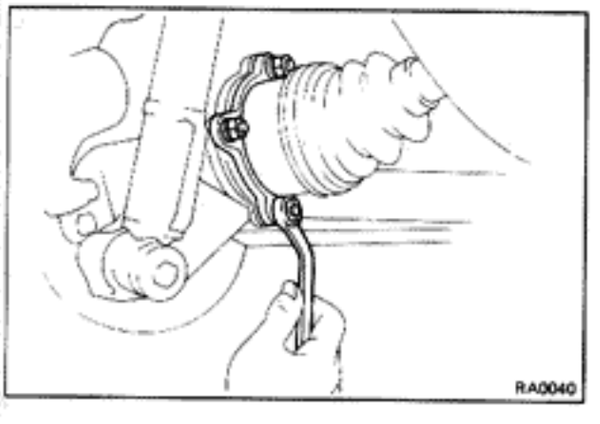

INSTALL DRIVE SHAFT

(a) Install the drive shaft with the narrow distance between the flange and boot band at the differential side.

NOTE: Be careful not to damage the boot when installing it to the vehicle.

(b) Torque the nuts.

Torque: 700 kg-cm (51 ft-lb, 69 N·m)

IRS TYPE DIFFERENTIAL

ON-VEHICLE REPLACEMENT OF SIDE GEAR SHAFT OIL SEAL

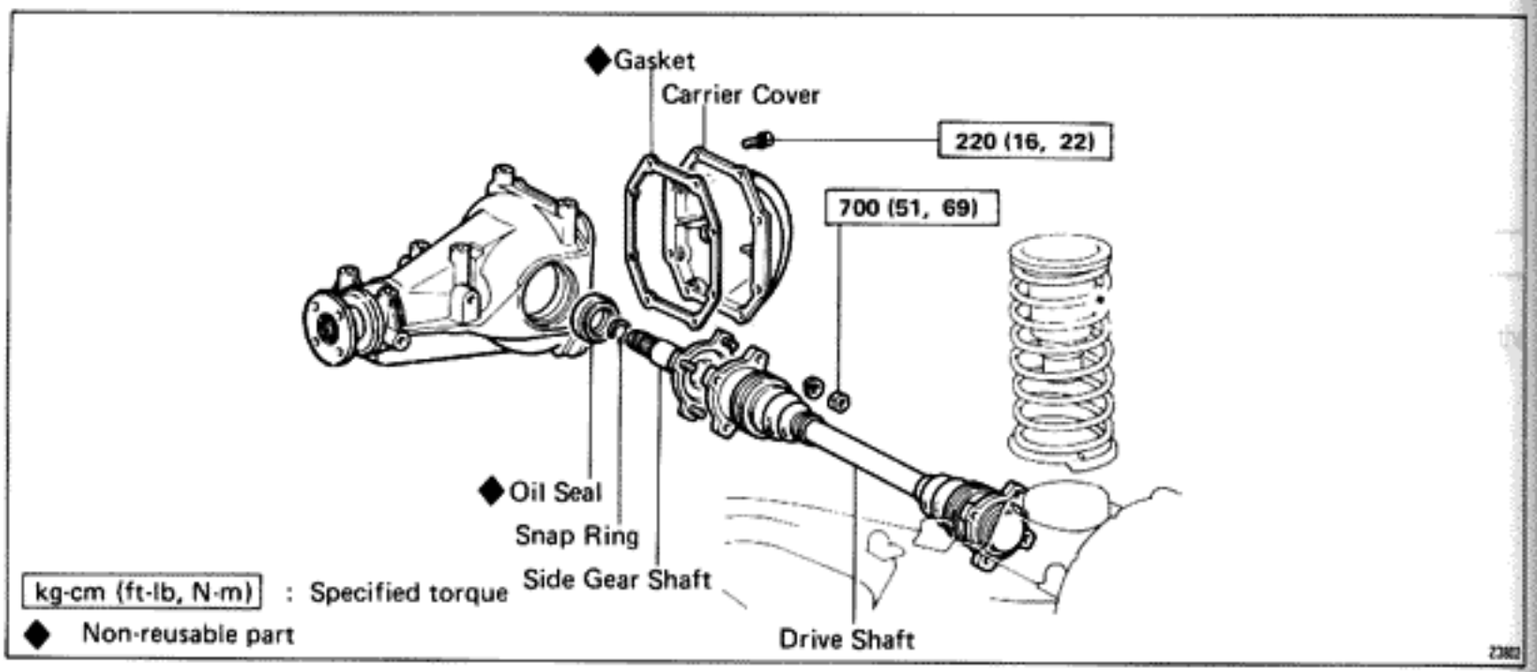

1. DRAIN OUT DIFFERENTIAL OIL
2. DISCONNECT DRIVE SHAFT FROM DIFFERENTIAL
3. REMOVE CARRIER COVER
4. REMOVE SIDE GEAR SHAFT (See step 2 on page RA-23)
5. REMOVE SIDE GEAR SHAFT OIL SEAL (See step 3 on page RA-23)
6. INSTALL SIDE GEAR SHAFT OIL SEAL (See step 16 on page RA-35)

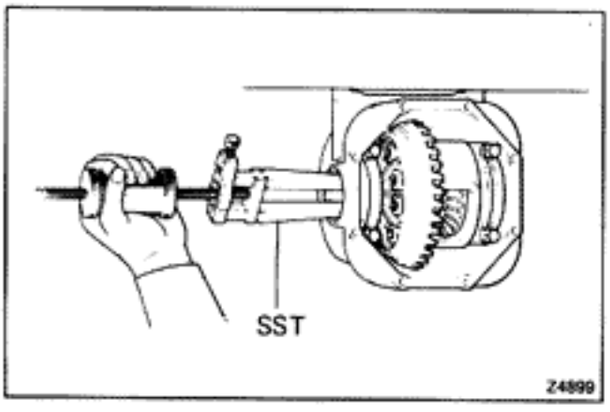

7. INSTALL SIDE GEAR SHAFT (See step 17 on page RA-36)
8. MEASURE SIDE GEAR SHAFT RUNOUT (See step 18 on page RA-36)
9. INSTALL CARRIER COVER (See step 19 on page RA-36)
10. CONNECT DRIVE SHAFT (See step 4 on page RA-36)

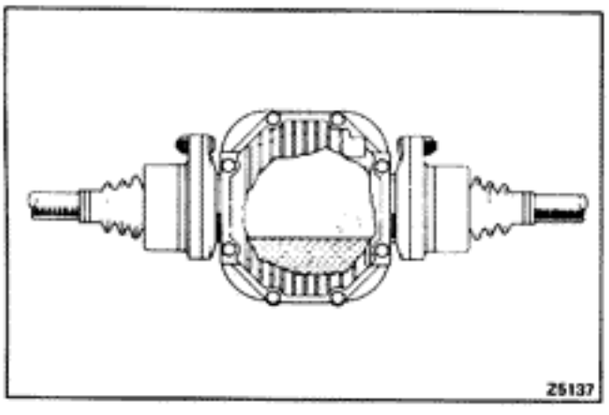

11. INSTALL DRAIN PLUG AND FILL DIFFERENTIAL WITH GEAR OIL

Hypoid gear oil: w/LSD use LSD oil only
SAE 90 above – 18°C (0°F)
SAE 80W or 80W – 90
at temperature below – 18°C (0°F)

Capacity: 1.2 liters (1.3 US qts, 1.1 Imp. qts)

Install a filler plug.

REPLACEMENT OF FRONT OIL SEAL COMPONENTS

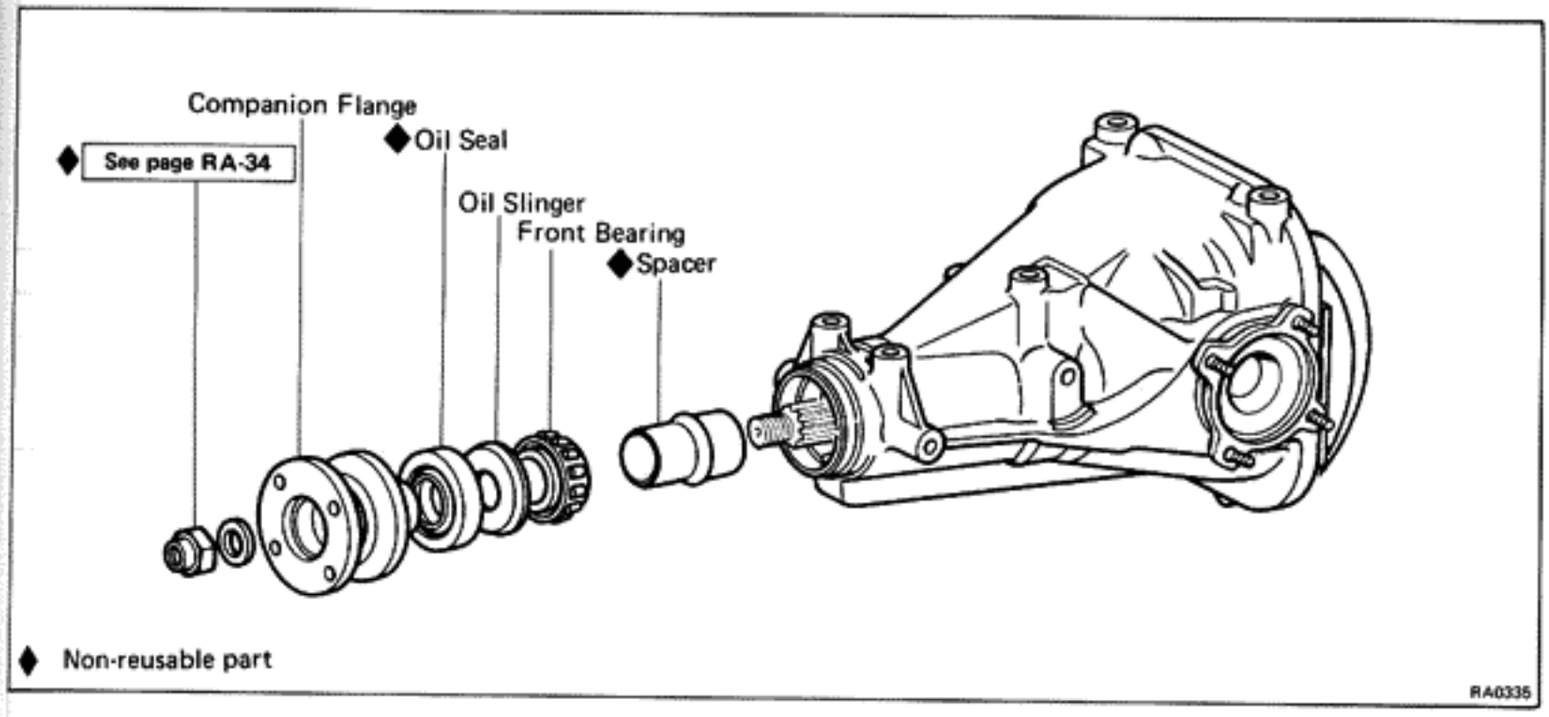

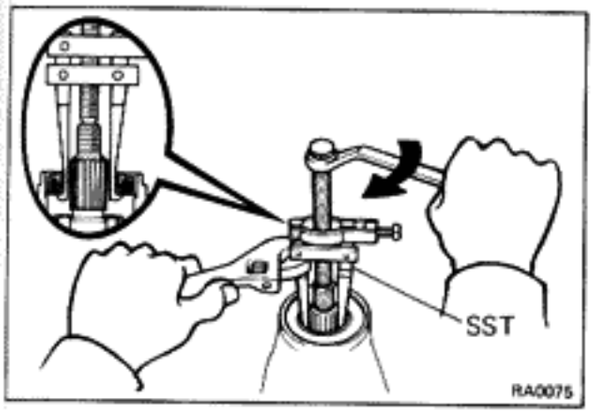

1. **REMOVE DIFFERENTIAL (See page RA-20)**

2. **REMOVE COMPANION FLANGE (See step 10 on page RA-24)**

3. **REMOVE OIL SEAL**
   (a) Using SST, remove the oil seal from the housing.
   SST 09308-10010
   (b) Remove the oil slinger.

4. **REMOVE FRONT BEARING AND BEARING SPACER (See step 12 on page RA-25)**

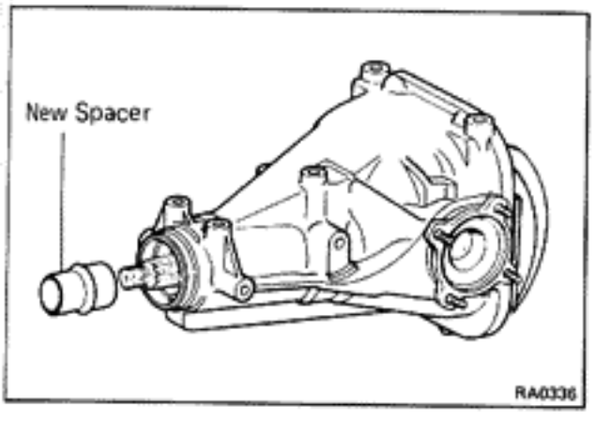

5. **INSTALL NEW BEARING SPACER AND FRONT BEARING**
   (a) Install a new bearing spacer on the shaft.
   (b) Install the front bearing on the shaft.

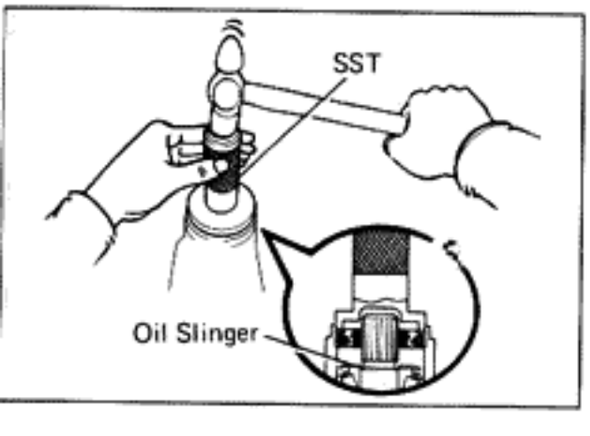

6. **INSTALL OIL SLINGER AND NEW OIL SEAL**
   (a) Install the oil slinger facing as shown.
   (b) Using SST, drive in a new oil seal.
   SST 09316-60010
   Oil seal drive in depth: 1.5 mm (0.059 in.)
   (c) Apply MP grease to the oil seal lip.

7. INSTALL COMPANION FLANGE
(See step 12 on page RA-34)

8. CHECK FRONT BEARING PRELOAD
(See step 13 on page RA-35)

9. CHECK DEVIATION OF COMPANION FLANGE
(See step 14 on page RA-35)

10. STAKE DRIVE PINION NUT

11. INSTALL DIFFERENTIAL (See page RA-36)

REMOVAL OF DIFFERENTIAL

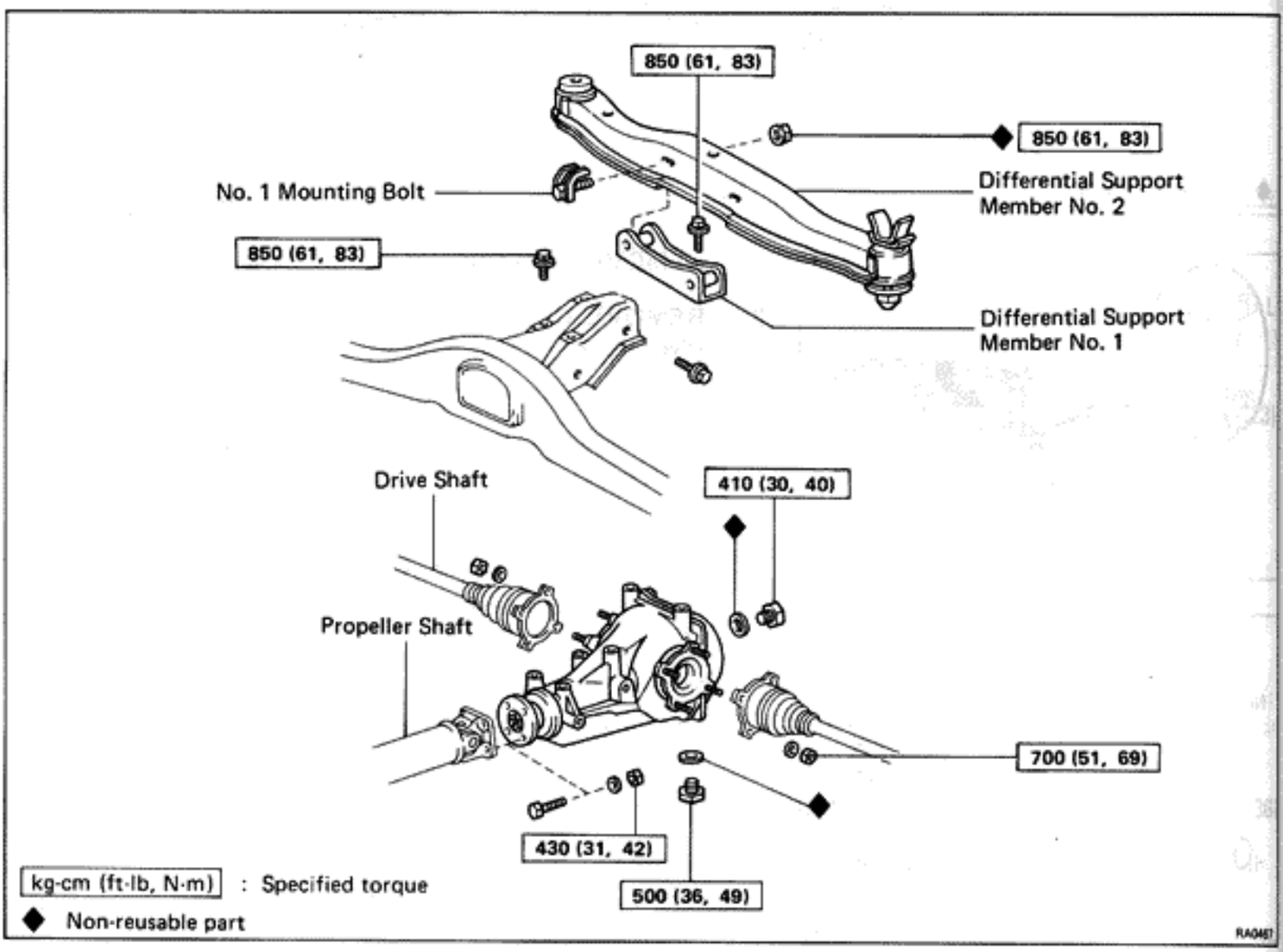

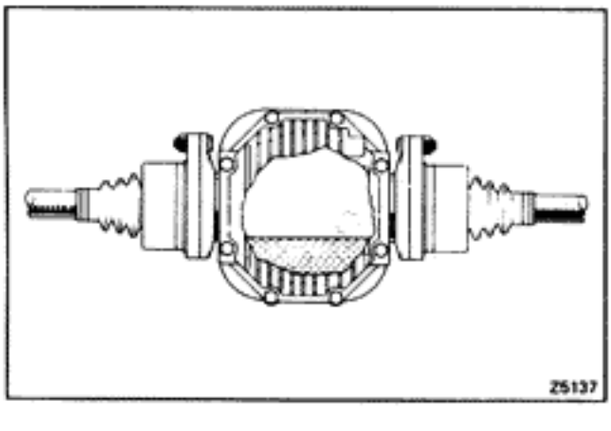

1. REMOVE DRAIN PLUG AND DRAIN DIFFERENTIAL OIL

2. DISCONNECT REAR DRIVE SHAFT

3. DISCONNECT PROPELLER SHAFT FLANGE FROM COMPANION FLANGE

4. REMOVE DIFFERENTIAL SUPPORT MEMBER NO.1 MOUNTING BOLT (See page RA-53)

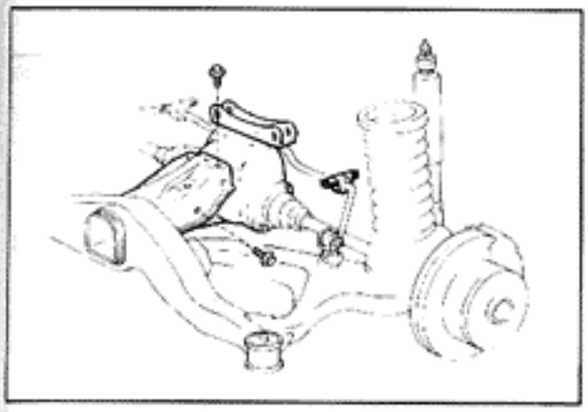

5. REMOVE DIFFERENTIAL

(a) Jack up differential and remove the carrier bolts.

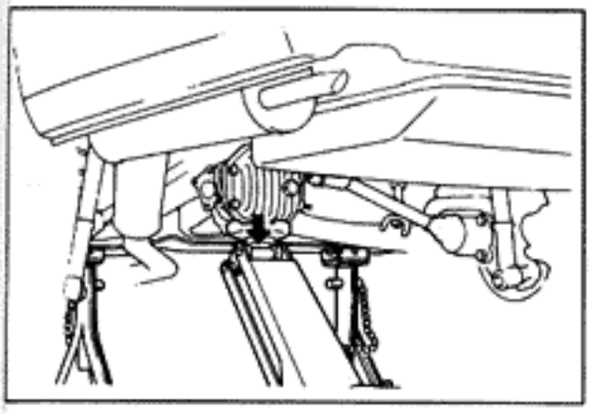

(b) Lower the differential carrier with a jack.

NOTE: When lowering the carrier, be careful that the differential does not separate.

COMPONENTS

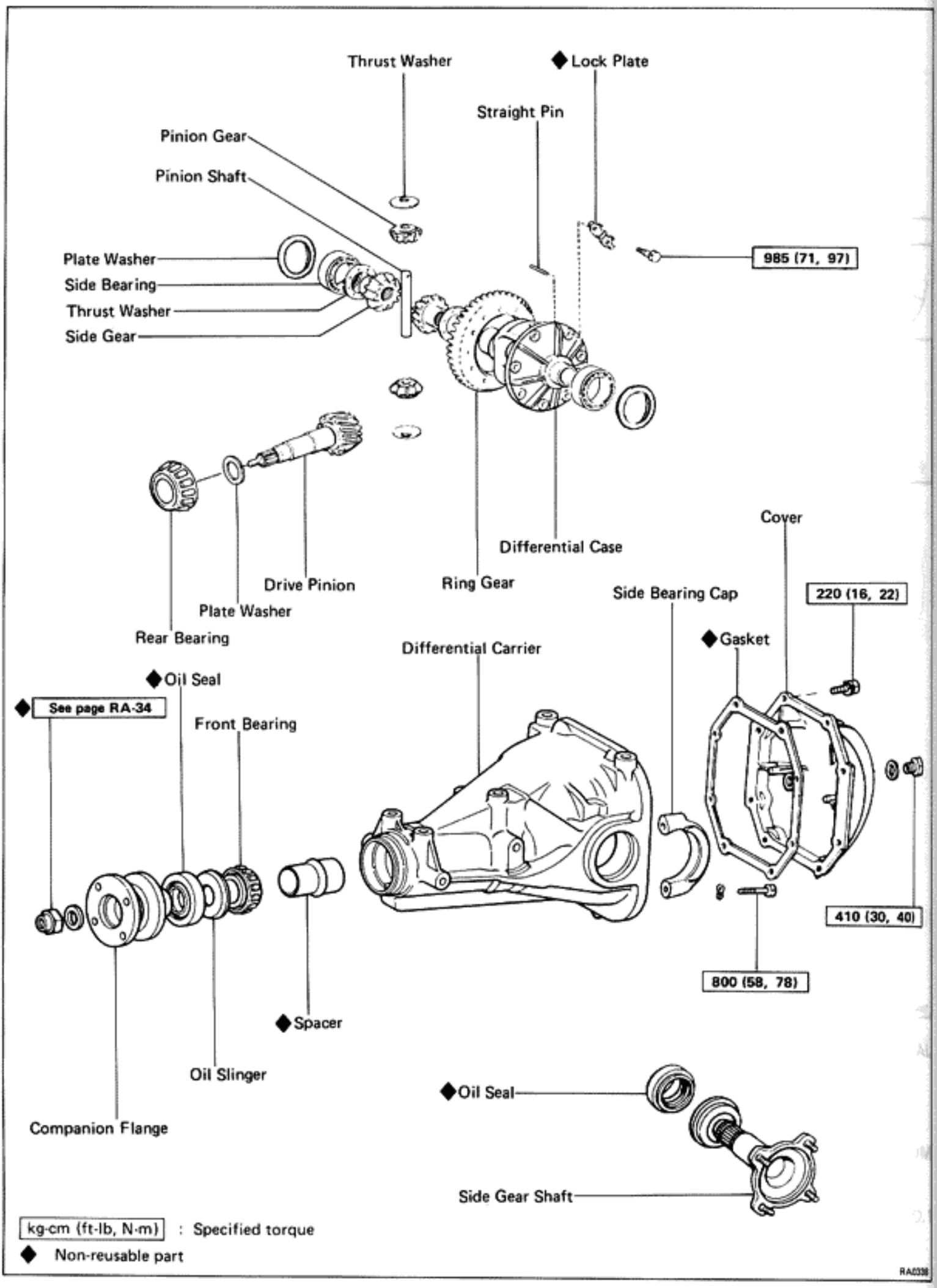

kg-cm (ft-lb, N·m) : Specified torque

◆ Non-reusable part

RA0338

DISASSEMBLY OF DIFFERENTIAL

1. REMOVE DIFFERENTIAL CARRIER COVER

Remove the eight bolts, cover and gasket.

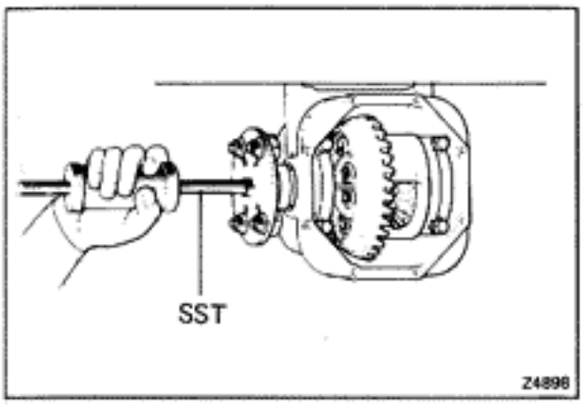

2. REMOVE SIDE GEAR SHAFT

Using SST, remove the side gear shaft from the differential carrier.

SST 09520-22011

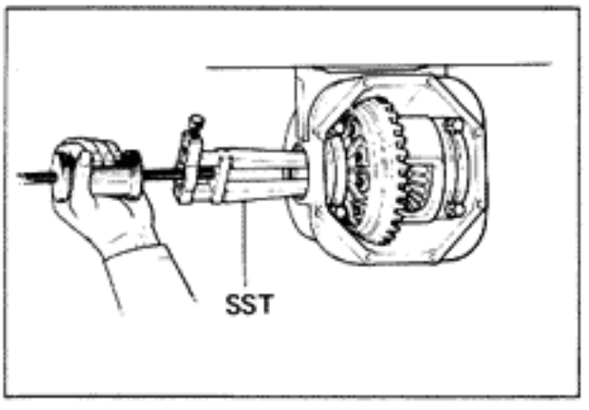

3. REMOVE SIDE GEAR SHAFT OIL SEAL

Using SST, remove the oil seal.

SST 09308-00010

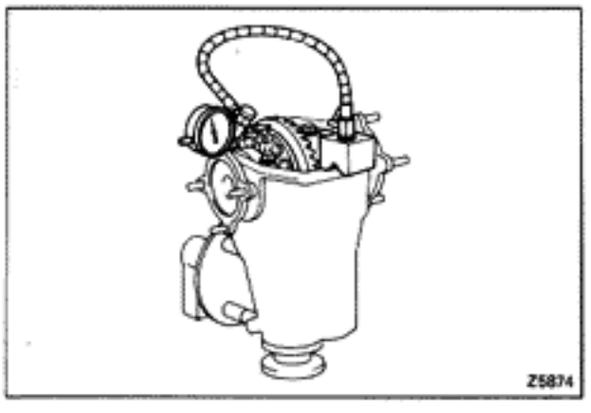

4. CHECK RING GEAR RUNOUT

If the runout is greater than maximum, install a new ring gear.

Maximum runout: 0.07 mm (0.0028 in.)

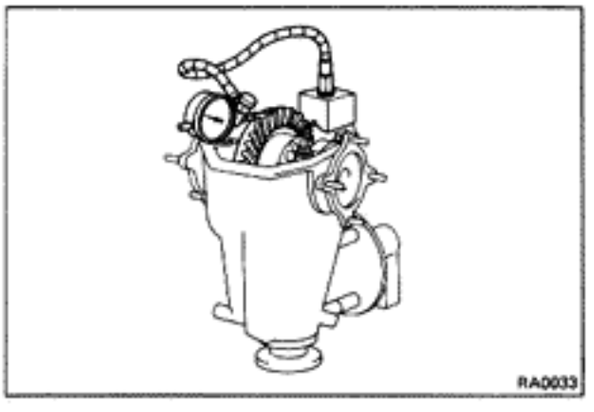

5. CHECK RING GEAR BACKLASH

If the backlash is not within specification, adjust the side bearing preload or repair as necessary. (See page RA-32)

Backlash: 0.13 – 0.18 mm (0.0051 – 0.0071 in.)

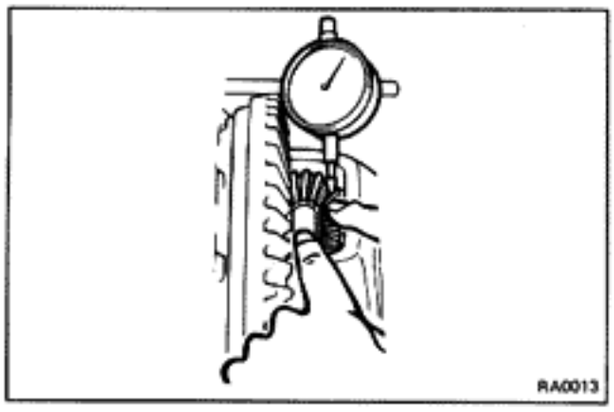

6. CHECK SIDE GEAR BACKLASH

Measure the side gear backlash while holding one pinion gear toward the case.

Standard backlash: 0.05 – 0.20 mm (0.0020 – 0.0079 in.)

If the backlash is out of specification, install the correct thrust washer. (See step 6 on page RA-27)

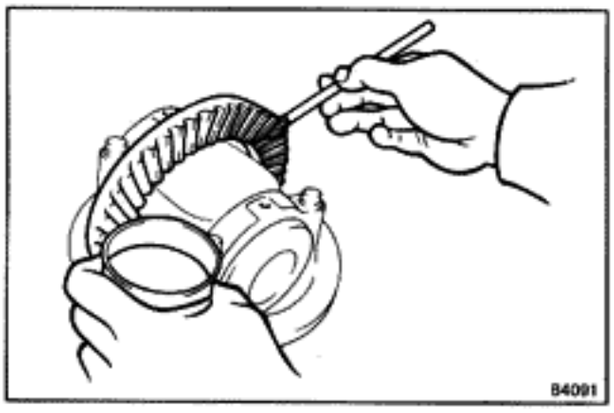

7. CHECK TOOTH CONTACT (See page RA-33)

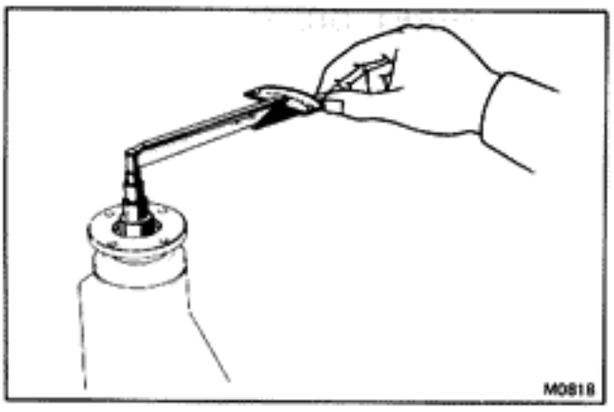

8. MEASURE DRIVE PINION PRELOAD

Using a torque wrench, measure the preload of the backlash between the drive pinion and ring gear.

Preload (starting): 6 – 10 kg-cm (5.2 – 8.7 in.-lb, 0.6 – 1.0 N·m)

9. CHECK TOTAL PRELOAD

Using a torque wrench, measure the total preload.

Total preload: In addition to drive pinion preload 4 – 6 kg-cm (3.5 – 5.2 in.-lb, 0.4 – 0.6 N·m)

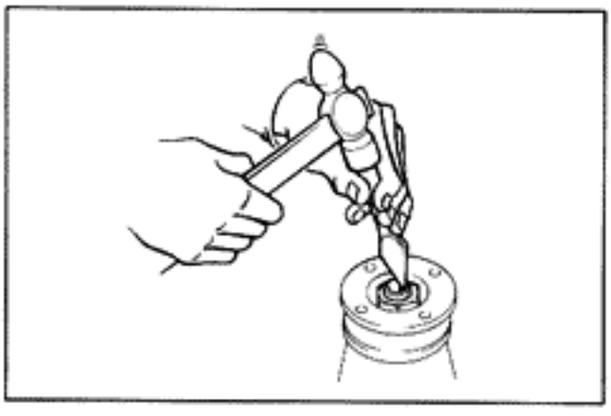

10. REMOVE COMPANION FLANGE

(a) Using a hammer and chisel, loosen the staked part of the nut.

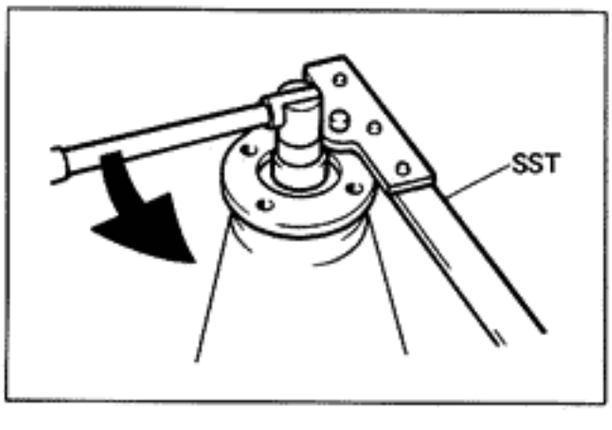

(b) Using SST to hold the flange, remove the nut.

SST 09330-00021

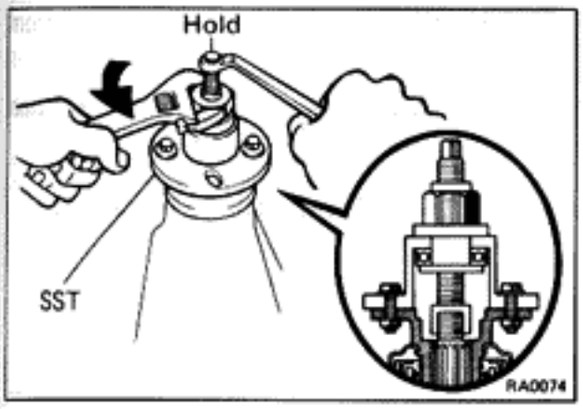

(c) Using SST, remove the companion flange.

SST 09557-22022

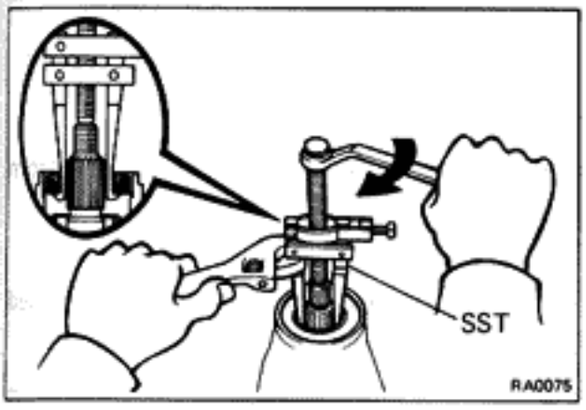

11. REMOVE OIL SEAL AND OIL SLINGER

(a) Using SST, remove the oil seal from the housing.

SST 09308-10010

(b) Remove the oil slinger.

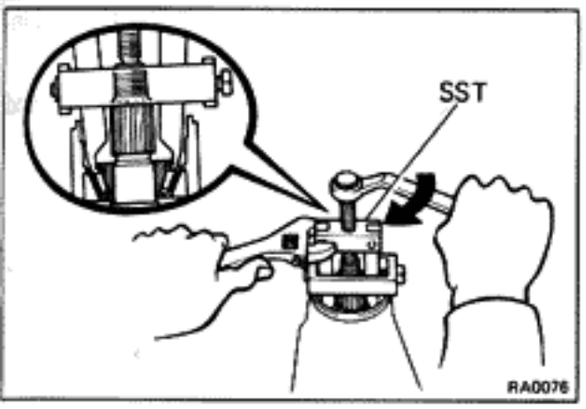

12. REMOVE FRONT BEARING AND BEARING SPACER

(a) Using SST, remove the front bearing from the housing.

SST 09556-30010

(b) Remove the bearing spacer.

If the front bearing is damaged or worn, replace the bearing.

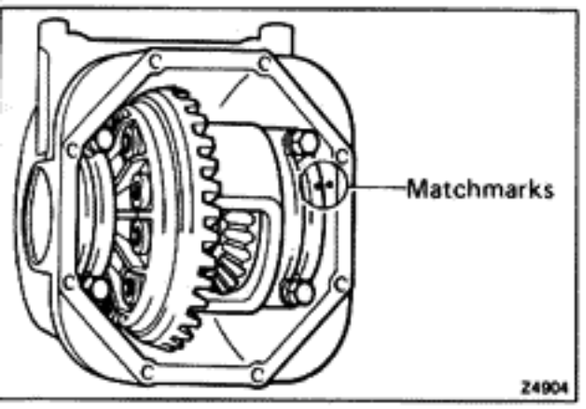

13. REMOVE DIFFERENTIAL CASE AND RING GEAR

(a) Place matchmarks on the bearing cap and differential carrier.

(b) Remove the two bearing caps.

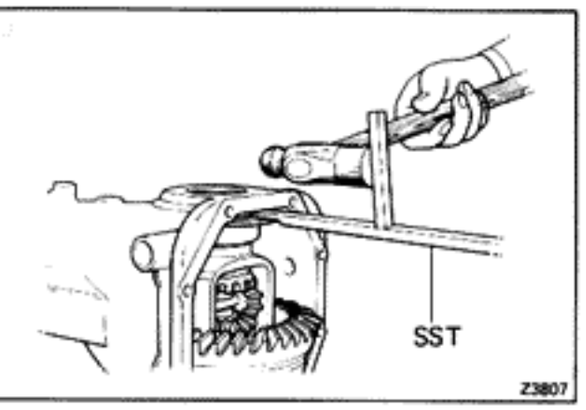

(c) Remove the two side bearing preload adjusting plate washers with SST.

SST 09504-22010

NOTE: Measure the adjusting plate washer and note the thickness.



(d) Remove the differential case bearing outer race from the carrier.

NOTE: Tag the bearing outer races to show the location for reassembly.

14. REMOVE DRIVE PINION FROM DIFFERENTIAL CARRIER

INSPECTION AND REPLACEMENT OF DIFFERENTIAL

1. REPLACE DRIVE PINION REAR BEARING

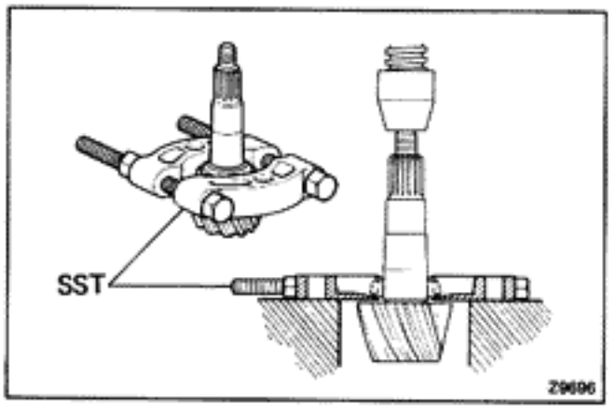

(a) Using SST and a press, pull out the rear bearing from the drive pinion.

SST 09950-00020

NOTE: If the drive pinion or ring gear are damaged replace them as a set.

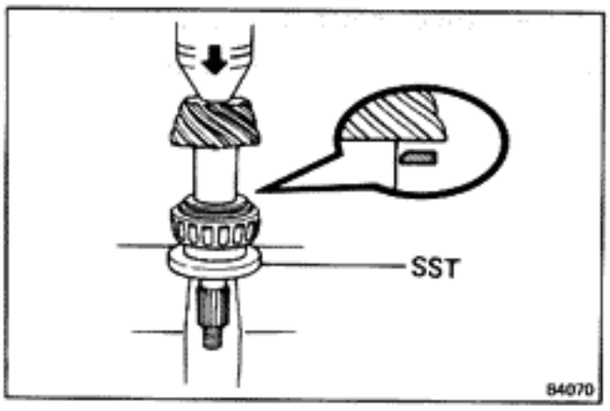

(b) Install the washer on the drive pinion with the chamfered end facing the pinion gear.

(c) Using SST and a press, press the reused washer and rear bearing onto the drive pinion.

SST 09506-30011

2. REPLACE DRIVE PINION FRONT AND REAR BEARING OUTER RACE

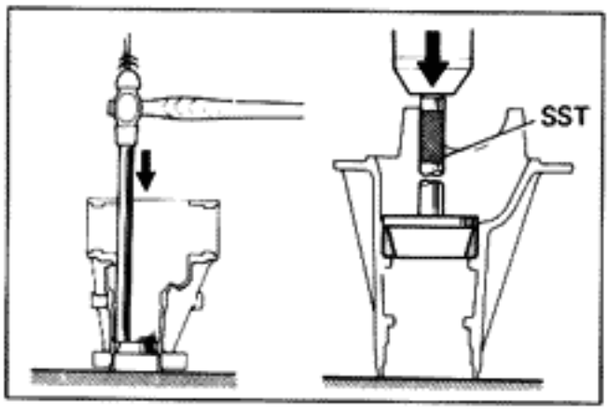

(a) Using a hammer and brass bar, drive out the outer race.

(b) Using SST, drive in a new outer race.

SST 09608-35014
(09608-06020, 09608-06110, 09608-06120)

3. REMOVE SIDE BEARINGS FROM DIFFERENTIAL CASE

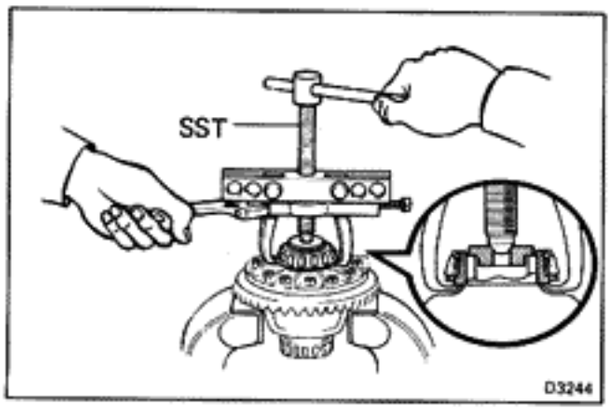

Using SST, pull the side bearing from the differential case.

SST 09950-20016

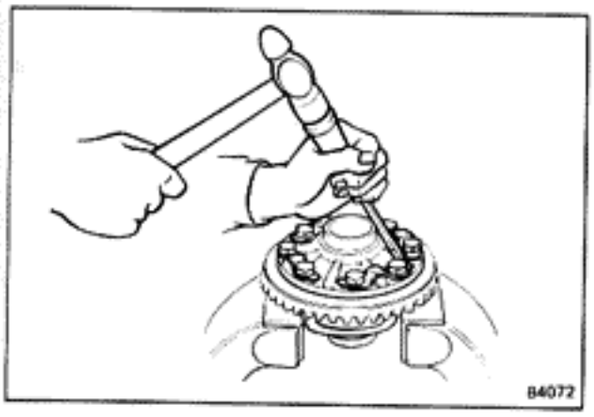

4. REMOVE RING GEAR

(a) Remove the ring gear set bolts and lock plates.

(b) Place matchmarks on the ring gear and differential case.

(c) Using a plastic or copper hammer, tap on the ring gear to separate it from the differential case.

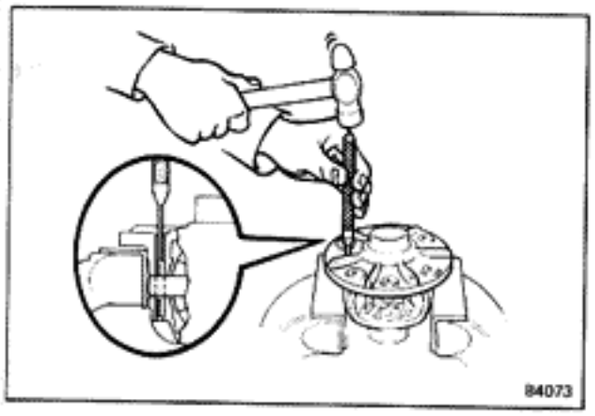

5. DISASSEMBLE DIFFERENTIAL CASE

Using a hammer and punch, drive out the straight pin. Remove the pinion shaft, two pinion gears, two side gears and two thrust washers.

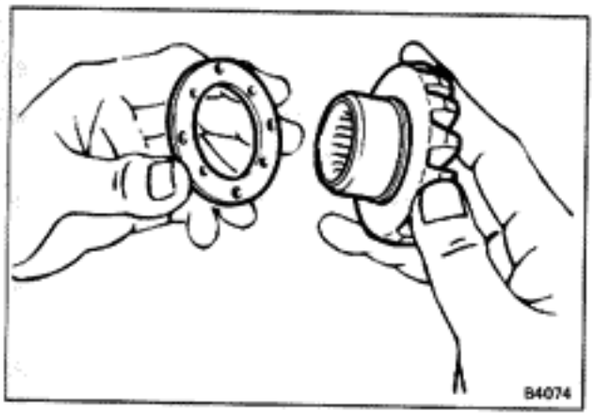

6. ASSEMBLE DIFFERENTIAL CASE

(a) Install correct thrust washer and side gears.
Select thrust washers from the table below that will ensure the backlash is within specification. Try to select washers of the same thickness for both sides.

Standard backlash: 0.05 – 0.20 mm (0.0020 – 0.0079 in.)

Thrust washer thickness mm (in.)

Thickness	
0.96 – 1.04	(0.0378 – 0.0409)
1.06 – 1.14	(0.0417 – 0.0449)
1.16 – 1.24	(0.0457 – 0.0488)
1.26 – 1.34	(0.0496 – 0.0528)

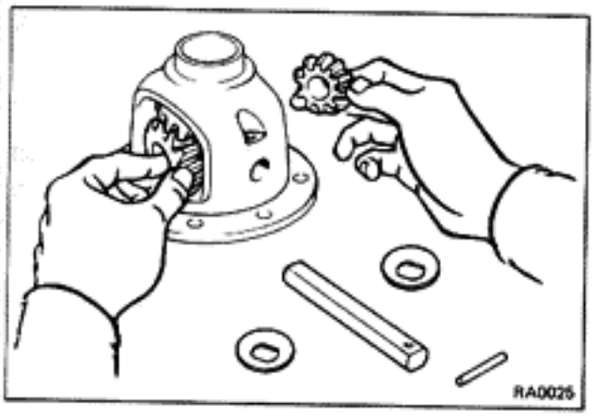

Install thrust washers and side gears in the differential case.

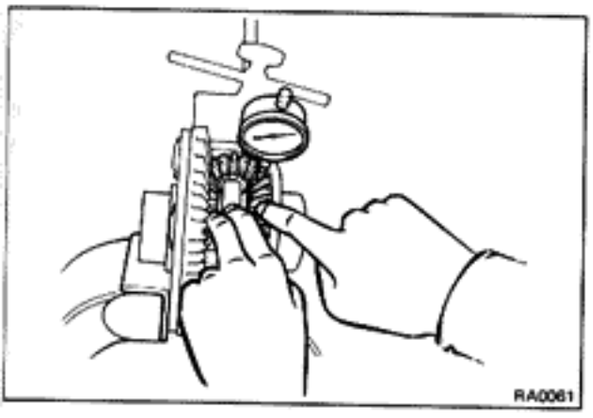

(b) Check the side gear backlash.

Measure the side gear backlash while holding one pinion gear toward the case.

Standard backlash: 0.05 – 0.20 mm (0.0020 – 0.0079 in.)

If the backlash is not within specification, install a thrust washer of different thickness.

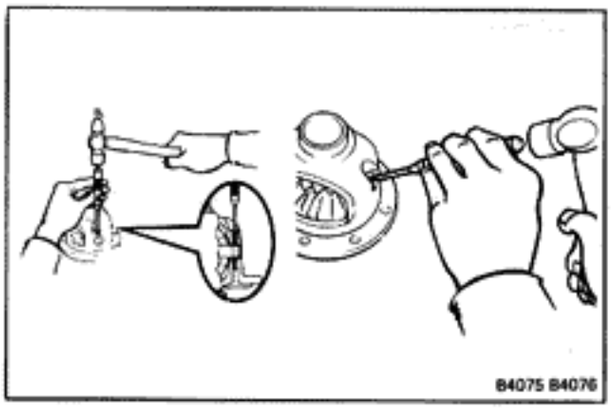

(c) Install straight pin.

- Using a hammer and punch, drive the straight pin through the case and hole in the pinion shaft.
- Stake the pin and differential case.

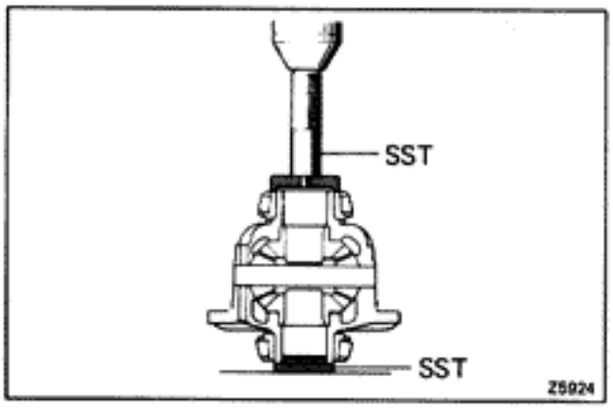

7. INSTALL NEW SIDE BEARING

Using SST and a press, drive a new side bearing into the differential case.

SST 09550-10012
(09252-10010, 09557-10010, 09558-10010)

8. INSTALL RING GEAR ON DIFFERENTIAL CASE

(a) Clean the contact surface of the differential case.

(b) Heat the ring gear to about 100°C (212°F) in an oil bath.

(c) Clean the contact surface of the ring gear with cleaning solvent.

(d) Then quickly install the ring gear on the differential case.

(e) Align the marks on the ring gear and differential case.

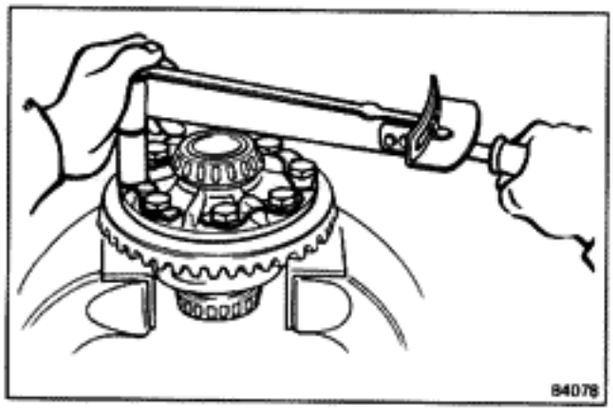

CAUTION: Do not heat the ring gear more than 110°C (230°F).

(f) Coat the ring gear set bolts with gear oil.

(g) Install the lock plates and set bolts. Tighten the set bolts uniformly, a little at a time. Torque the bolts.

Torque: 985 kg-cm (71 ft-lb, 97 N·m)

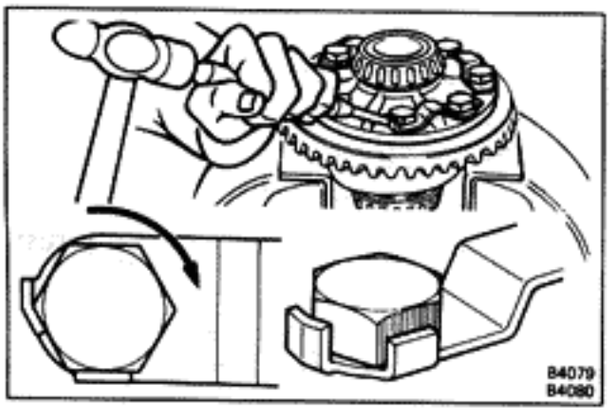

(h) Using a hammer and drift punch, stake the lock plates.

NOTE: Stake one claw flush with the flat surface of the nut. For the claw contacting the protruding portion of the nut, stake only the half on the tightening side.

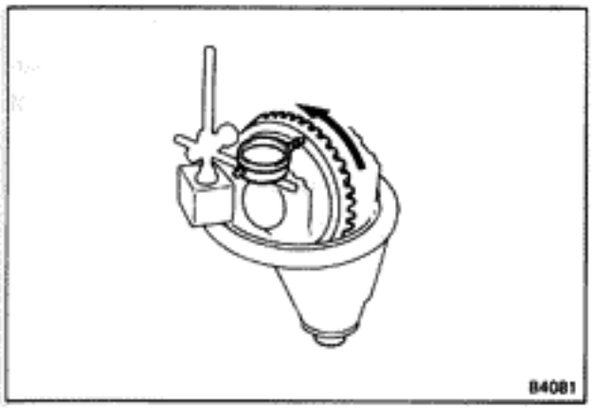

(i) Check the ring gear runout.

Maximum runout: 0.07 mm (0.0028 in.)

Install the differential case onto the carrier and tighten the adjusting nut just to where there is no play in the bearing.

ASSEMBLY OF DIFFERENTIAL

(See page RA-22)

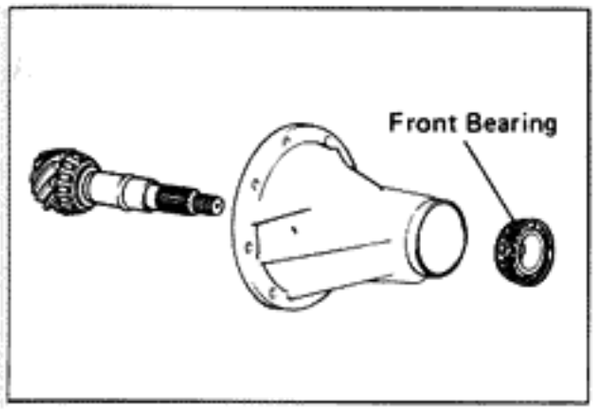

1. TEMPORARILY ADJUST DRIVE PINION PRELOAD

(a) Install the following parts.

- Drive pinion
- Front bearing

NOTE: Assemble the spacer, oil slinger and oil seal after adjusting the gear contact pattern.

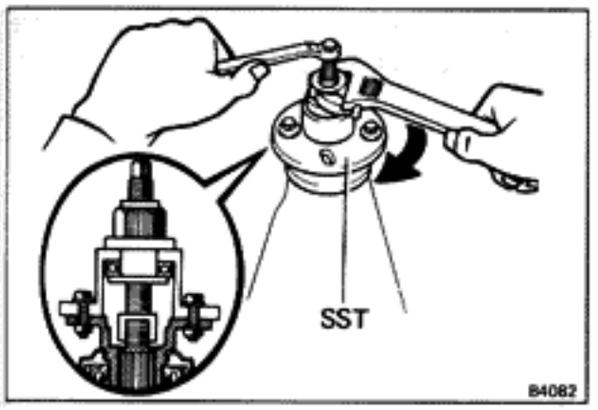

(b) Install the companion flange with SST.

Coat the threads of the nut with MP grease.

SST 09557-22022

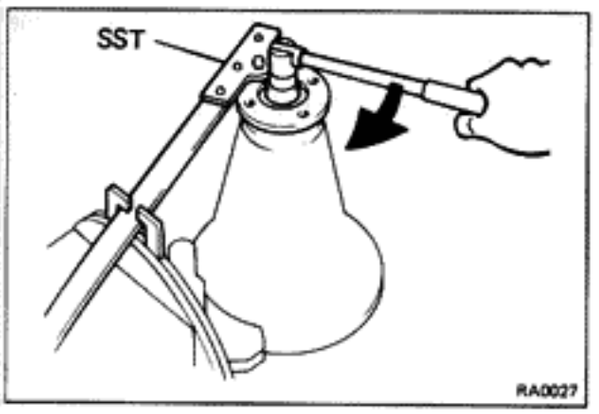

(c) Adjust the drive pinion preload by tightening the companion flange nut.

Using SST to hold the flange, tighten the nut.

SST 09330-00021

CAUTION: As there is no spacer, tighten a little at a time, being careful not to overtighten it.

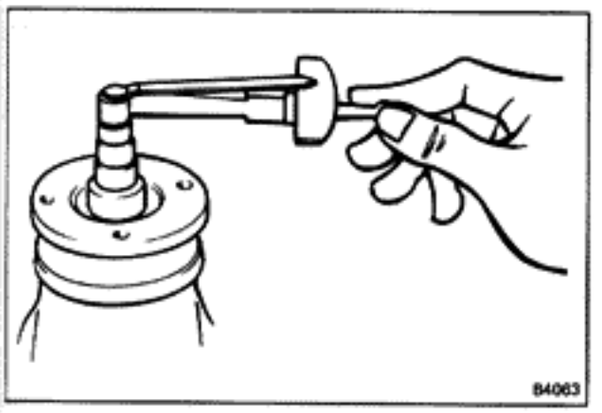

(d) Using a torque wrench, measure the preload.

Preload:

New bearing	**12 – 19 kg-cm (10.4 – 16.5 in.-lb, 1.2 – 1.9 N·m)**
Reused bearing	**6 – 10 kg-cm (5.2 – 8.7 in.-lb, 0.6 – 1.0 N·m)**

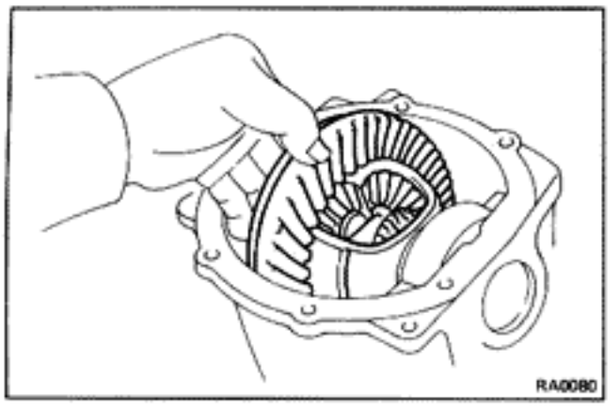

2. INSTALL DIFFERENTIAL CASE IN CARRIER

(a) Place the bearing outer races on their respective bearings. Make sure the left and right outer races are not interchanged.

(b) Install the differential case in the carrier.

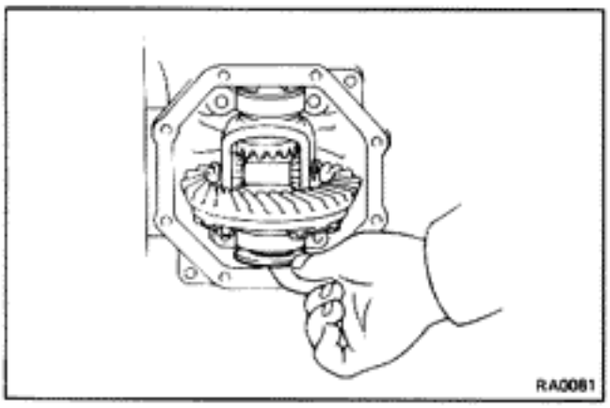

3. ADJUST RING GEAR BACKLASH

(a) Install only the plate washer on the ring gear back side.

NOTE: Insure that the ring gear has a backlash.

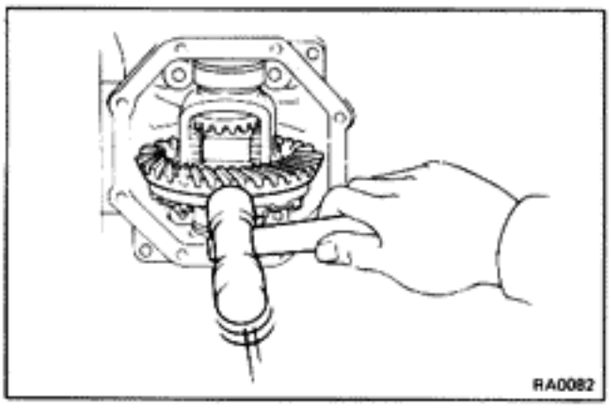

(b) Snug down the washer and bearing by tapping on the ring gear with a plastic hammer.

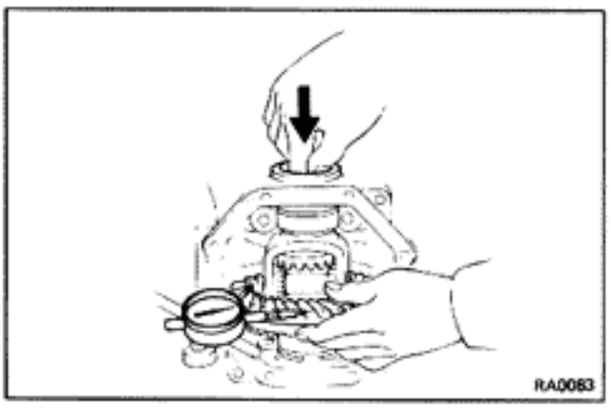

(c) Hold the side bearing boss on the teeth surface of the ring gear and measure the backlash.

Backlash (reference): 0.10 mm (0.0039 in.)

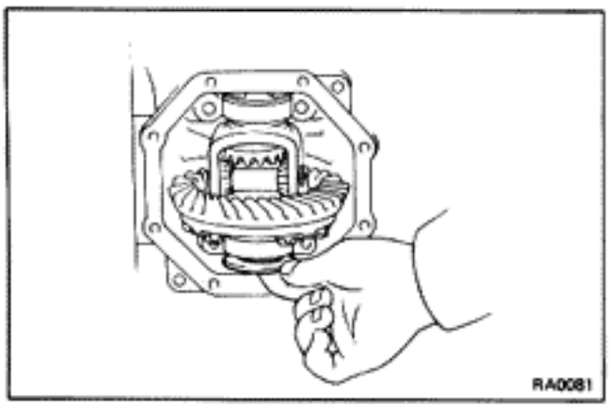

(d) Select a ring gear back plate washer using the backlash as reference. (See page RA-32)

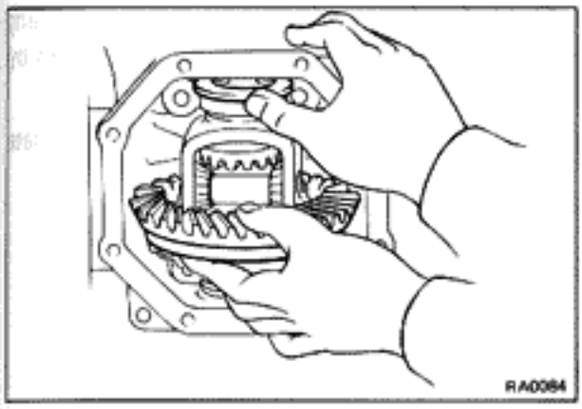

(e) Select a ring gear teeth side washer of a thickness which eliminates any clearance between the outer race and case.

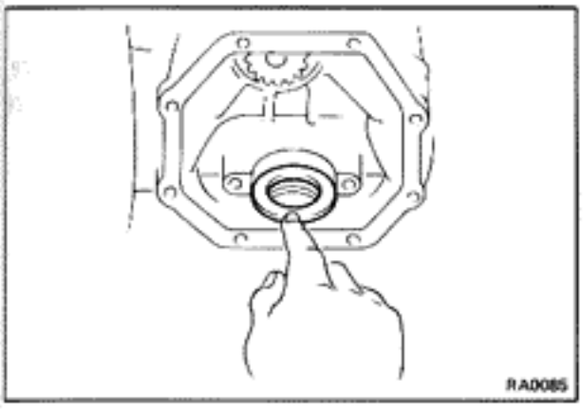

(f) Remove the plate washers and differential case.

(g) Install the plate washer into the lower part of the carrier.

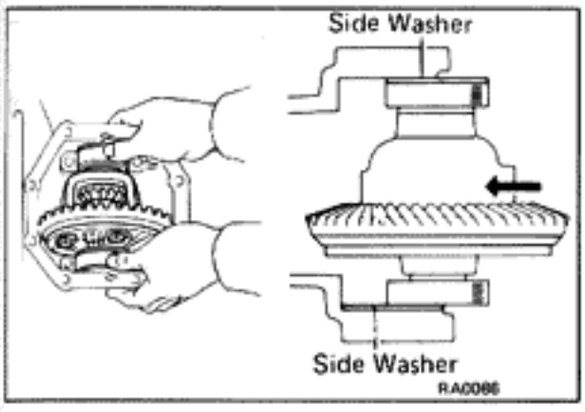

(h) Place the other plate washer onto the differential case together with the outer race, and install the differential case with the outer race into the carrier.

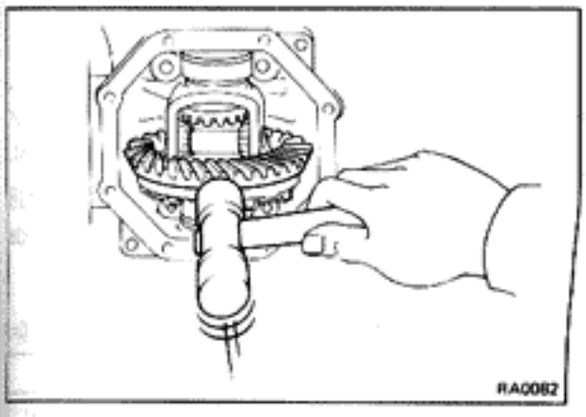

(i) Using a plastic hammer, snug down the washer and bearing by tapping the ring gear.

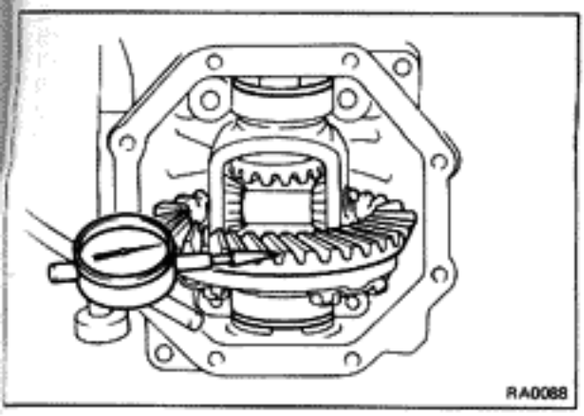

(j) Using a dial indicator, measure the ring gear backlash.

Backlash: 0.13 – 0.18 mm (0.0051 – 0.0071 in.)

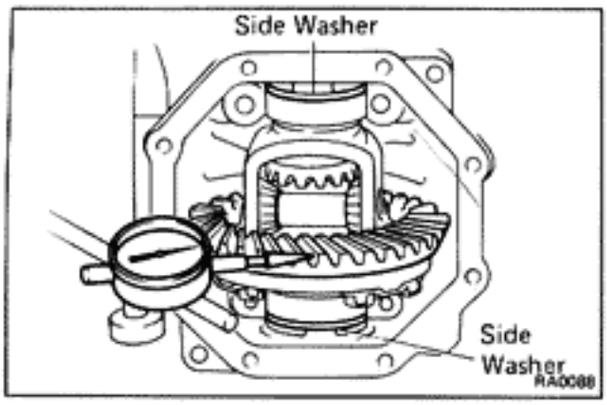

(k) If not within specification, adjust by either increasing or decreasing the number of washers on both sides by an equal amount.

NOTE: There should be no clearance between the plate washer and case.
Insure that there is ring gear backlash.

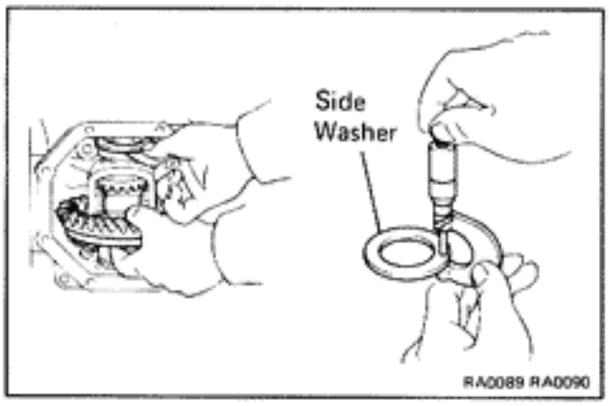

4. ADJUST SIDE BEARING PRELOAD

(a) After adjustment with the backlash as reference, remove the ring gear teeth plate washer and measure the thickness.

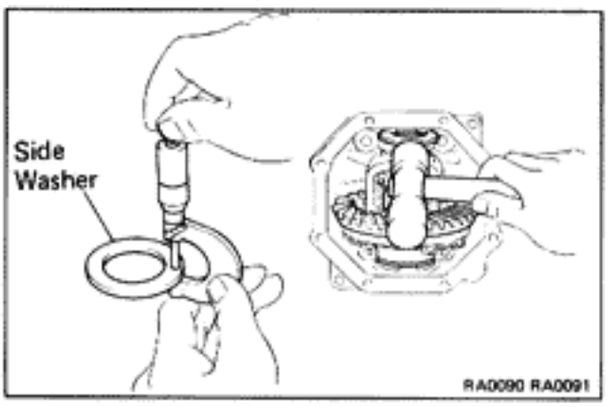

(b) Install a new washer of 0.06 – 0.09 mm (0.0024 – 0.0035 in.) thicker than the washer removed.

NOTE: Select a washer which can be pressed in 2/3 of the way by finger.

(c) Using a plastic hammer, tap in the side washer.

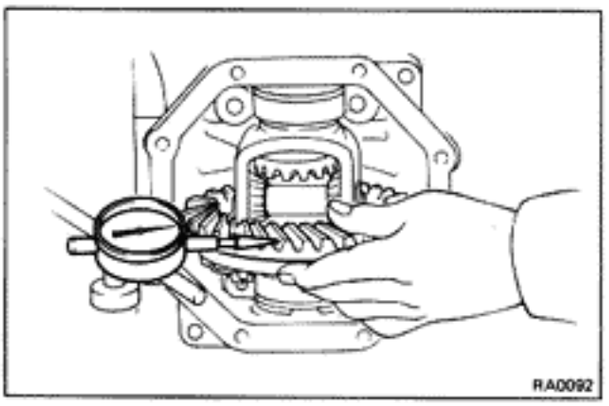

(d) Recheck the ring gear backlash.

Backlash: 0.13 – 0.18 mm (0.0051 – 0.0071 in.)

(e) If not within standard, adjust by either increasing or decreasing the washers on both sides by equal amount.

NOTE: The backlash will change about 0.02 mm (0.0008 in.) with 0.03 mm (0.0012 in.) alteration of the side washer.

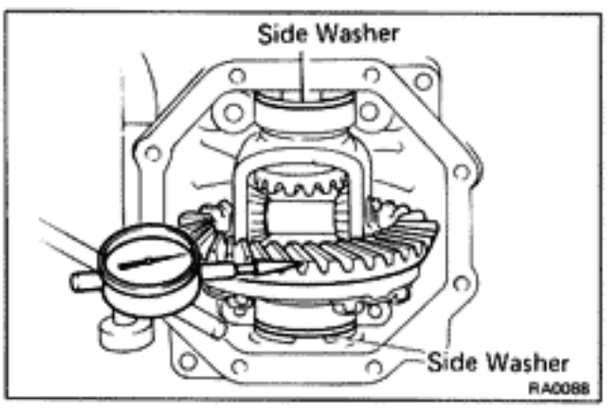

Washer thickness mm (in.)

Thickness	Thickness
2.57 – 2.59 (0.1012 – 0.1020)	2.93 – 2.95 (0.1154 – 0.1161)
2.60 – 2.62 (0.1024 – 0.1031)	2.96 – 2.98 (0.1165 – 0.1173)
2.63 – 2.65 (0.1035 – 0.1043)	2.99 – 3.01 (0.1177 – 0.1185)
2.66 – 2.68 (0.1047 – 0.1055)	3.02 – 3.04 (0.1189 – 0.1197)
2.69 – 2.71 (0.1059 – 0.1067)	3.05 – 3.07 (0.1201 – 0.1209)
2.72 – 2.74 (0.1071 – 0.1079)	3.08 – 3.10 (0.1213 – 0.1220)
2.75 – 2.77 (0.1083 – 0.1091)	3.11 – 3.13 (0.1224 – 0.1232)
2.78 – 2.80 (0.1094 – 0.1102)	3.14 – 3.16 (0.1236 – 0.1244)
2.81 – 2.83 (0.1106 – 0.1114)	3.17 – 3.19 (0.1248 – 0.1256)
2.84 – 2.86 (0.1118 – 0.1126)	3.20 – 3.22 (0.1260 – 0.1268)
2.87 – 2.89 (0.1130 – 0.1138)	3.23 – 3.25 (0.1272 – 0.1280)
2.90 – 2.92 (0.1142 – 0.1150)	

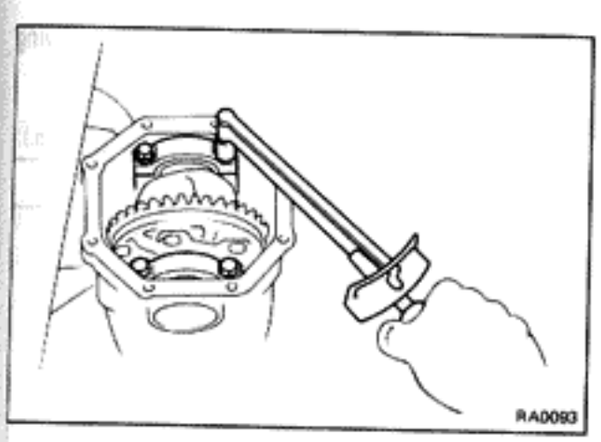

5. INSTALL SIDE BEARING CAPS

Align the marks on the cap and carrier.

Torque: 800 kg-cm (58 ft-lb, 78 N·m)

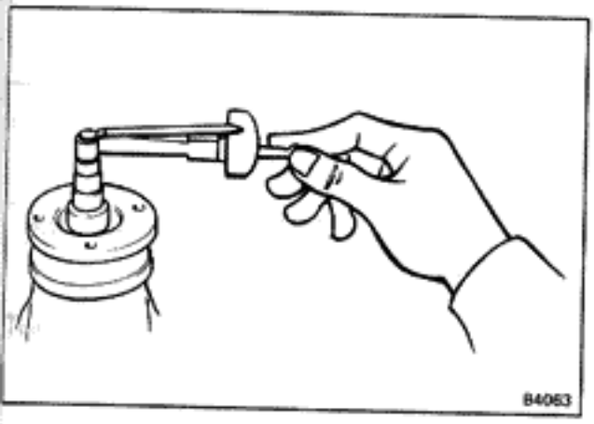

6. MEASURE TOTAL PRELOAD

Using a torque wrench, measure the total preload.

Total preload: In addition to drive pinion preload
4 – 6 kg-cm (3.5 – 5.2 in.-lb, 0.4 – 0.6 N·m)

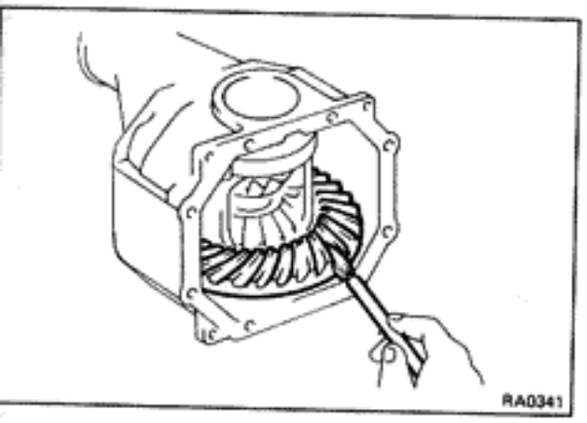

7. INSPECT TOOTH CONTACT BETWEEN RING GEAR AND DRIVE PINION

(a) Coat 3 or 4 teeth at three different positions on the ring gear with red lead.

(b) Hold the companion flange firmly and rotate the ring gear in both directions.

(c) Inspect the tooth pattern.

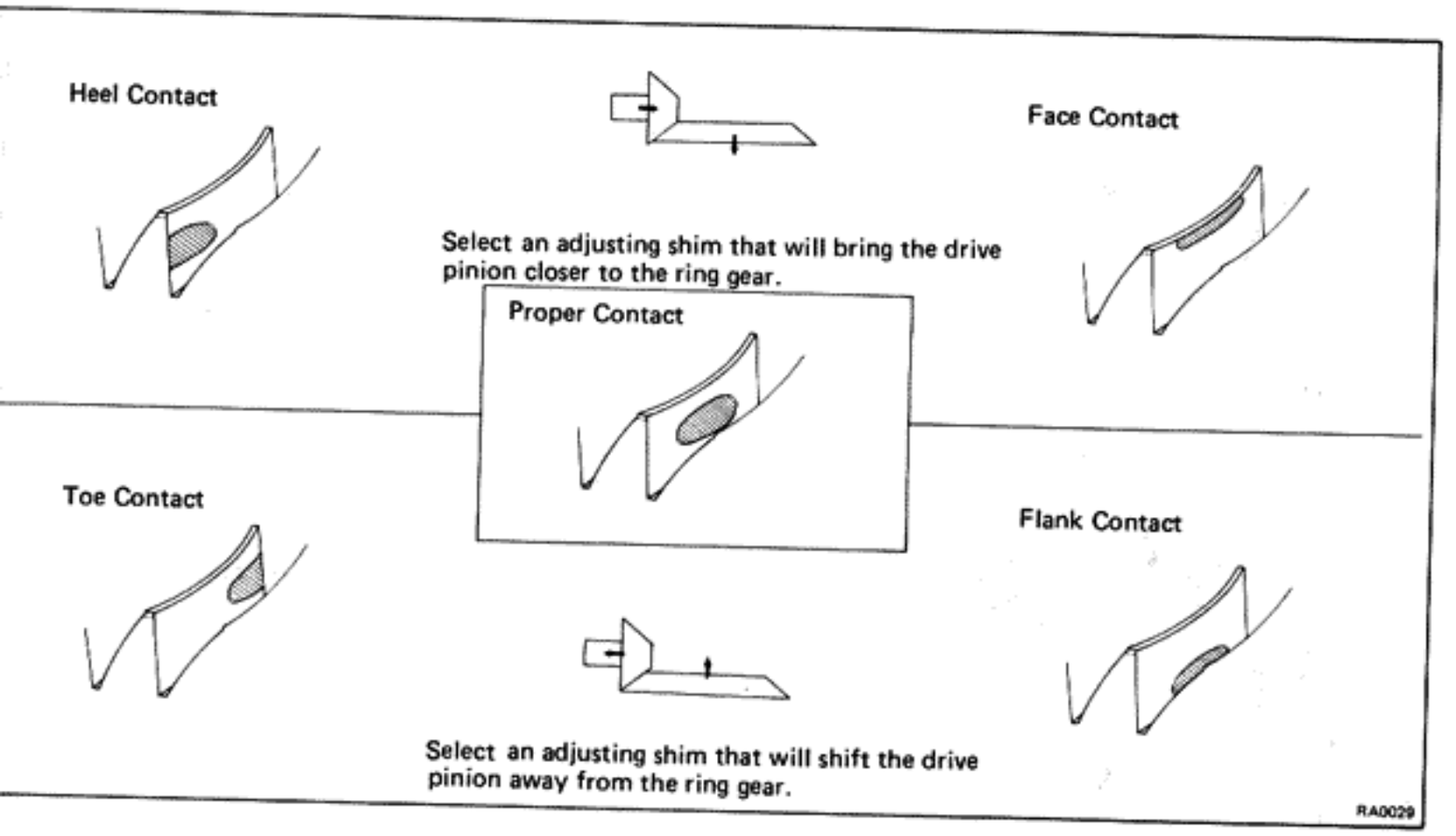

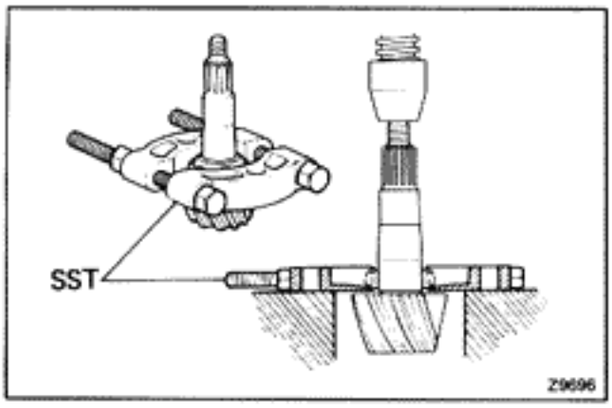

If the teeth are not contacting properly, use the following chart to select a proper washer for correction.

Washer thickness mm (in.)

Thickness	Thickness
2.24 (0.0882)	2.51 (0.0988)
2.27 (0.0894)	2.54 (0.1000)
2.30 (0.0906)	2.57 (0.1012)
2.33 (0.0917)	2.60 (0.1024)
2.36 (0.0929)	2.63 (0.1035)
2.39 (0.0941)	2.66 (0.1047)
2.42 (0.0953)	2.69 (0.1059)
2.45 (0.0965)	2.72 (0.1071)
2.48 (0.0976)	

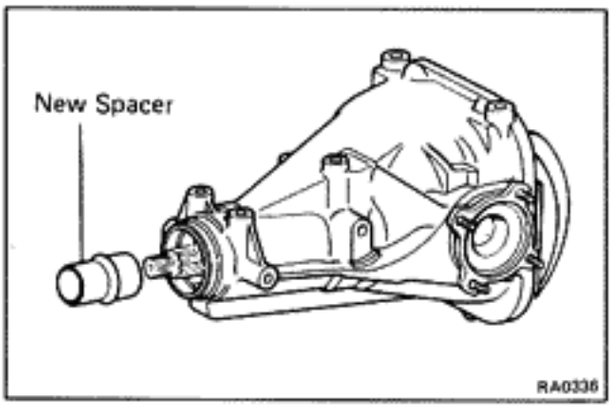

8. **REMOVE COMPANION FLANGE**
(See step 10 on page RA-24)

9. **REMOVE FRONT BEARING AND BEARING SPACER**
(See step 12 on page RA-25)

10. **INSTALL NEW BEARING SPACER AND FRONT BEARING**

(a) Install a new bearing spacer on the shaft.

(b) Install the front bearing on the shaft.

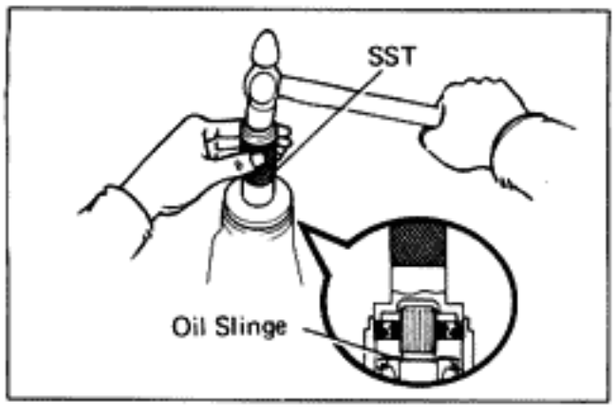

11. **INSTALL OIL SLINGER AND NEW OIL SEAL**

(a) Install the oil slinger facing as shown.

(b) Using SST, drive in a new oil seal.

SST 09316-60010

Oil seal drive in depth: 1.5 mm (0.059 in.)

(c) Apply MP grease to the oil seal lip.

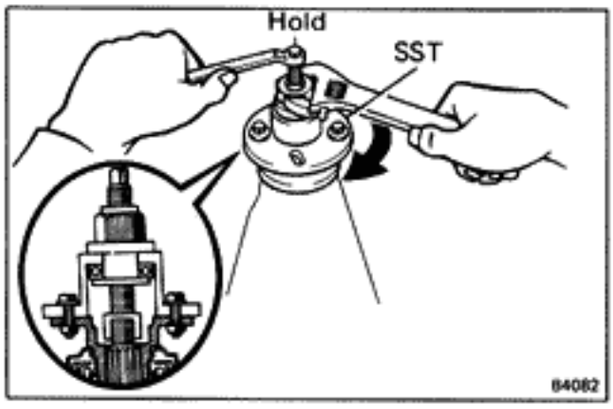

12. **INSTALL COMPANION FLANGE**

(a) Using SST, install the companion flange on the shaft.

SST 09557-22022

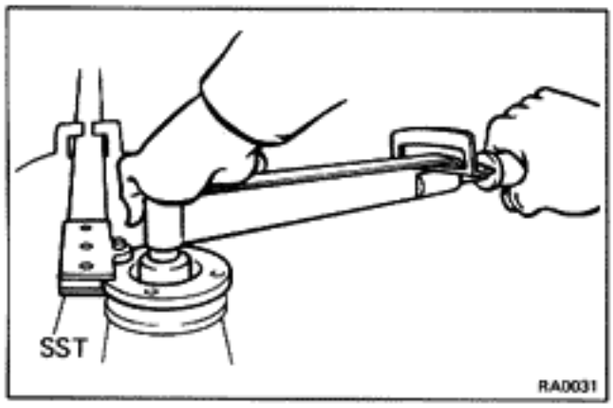

(b) Coat the threads of a new nut with MP grease.

(c) Using SST to hold the flange, tighten the nut.

SST 09330-00021

Torque: 1,100 kg-cm (80 ft-lb, 108 N·m)

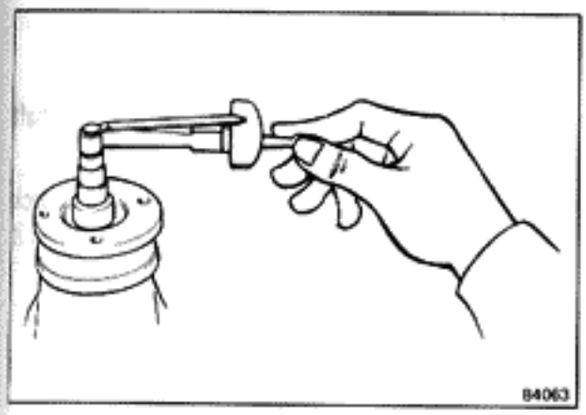

13. CHECK FRONT BEARING PRELOAD

Using a torque wrench, measure the preload of the backlash between the drive pinion and ring gear.

Preload:

New bearing	**12 – 19 kg-cm (10.4 – 16.5 in.-lb, 1.2 – 1.9 N·m)**
Reused bearing	**6 – 10 kg-cm (5.2 – 8.7 in.-lb, 0.6 – 1.0 N·m)**

(a) If preload is greater than specification, replace the bearing spacer.

(b) If the preload is less than specification, retighten the nut 130 kg-cm (9 ft-lb, 13 N·m) at a time until the specified preload is reached.

If the maximum torque is exceeded while retightening the nut, replace the bearing spacer and repeat the preload procedure. Do not back off the pinion nut to reduce the preload.

Maximum torque: 2,400 kg-cm (174 ft-lb, 235 N·m)

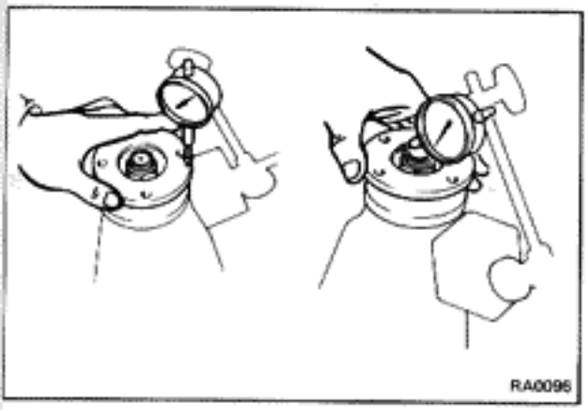

14. CHECK RUNOUT OF COMPANION FLANGE

Using a dial indicator, measure the lateral and radial runout of the companion flange.

If the runout is greater than the maximum, inspect the bearings.

Maximum lateral runout: 0.10 mm (0.0039 in.)

Maximum radial runout: 0.10 mm (0.0039 in.)

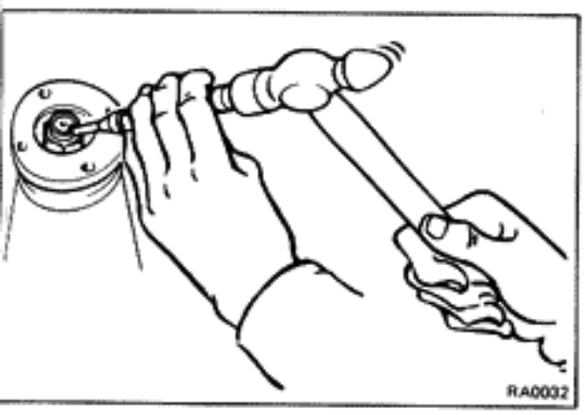

15. STAKE DRIVE PINION NUT

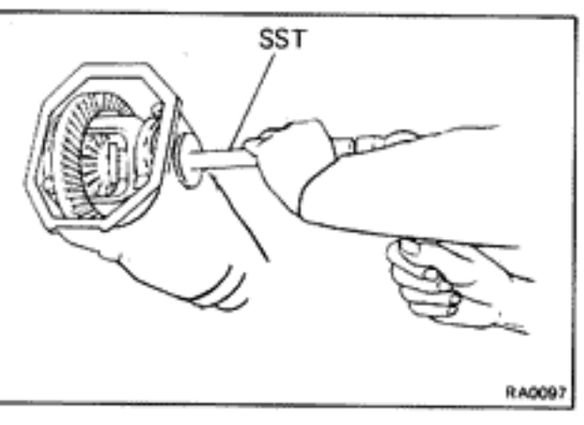

16. INSTALL SIDE GEAR SHAFT OIL SEAL

(a) Coat the oil seal lip with MP grease No. 2.

(b) Using SST, drive in the oil seal until it is flush with the carrier end surface.

SST 09550-22011 (09550-00020 and 09550-00030)

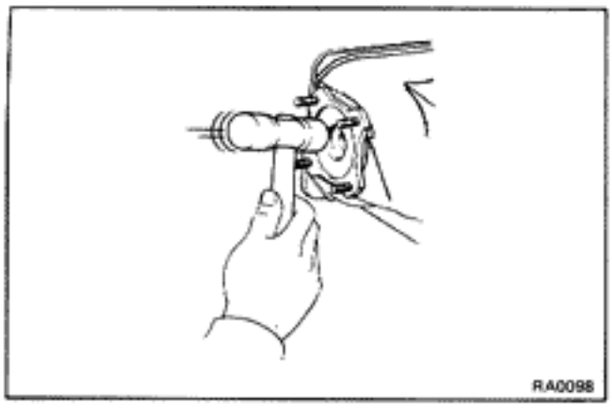

17. INSTALL SIDE GEAR SHAFT

(a) Before installing the shaft, replace the snap ring.

(b) Using a plastic hammer, drive in the side gear shaft until it contacts the pinion shaft.

NOTE: As the LSD cannot be checked visually, check that the shaft is fully inserted by confirming the sound it makes when it is tapped.

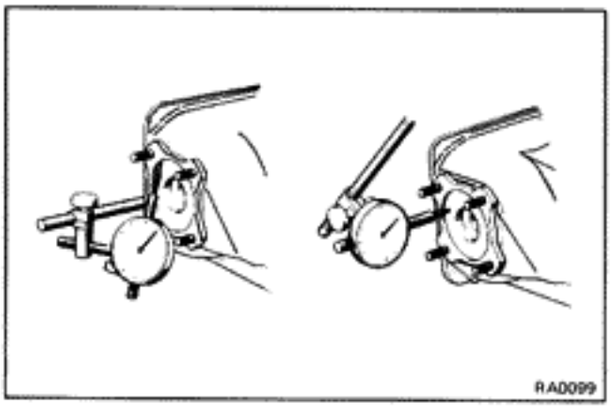

18. MEASURE SIDE GEAR SHAFT RUNOUT

Maximum runout: 0.20 mm (0.0079 in.)

If the runout is greater than the maximum, replace the side gear shaft.

19. INSTALL DIFFERENTIAL CARRIER COVER

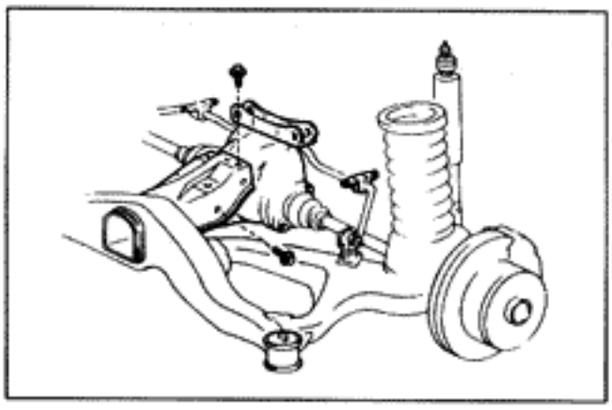

INSTALLATION OF DIFFERENTIAL

(See page RA-20)

1. INSTALL DIFFERENTIAL

Support the differential with a jack and install the carrier bolt.

Torque: 850 kg-cm (61 ft-lb, 83 N·m)

2. INSTALL DIFFERENTIAL SUPPORT MEMBER MOUNTING BOLT NO. 1 **(See page RA-55)**

Torque: 850 kg-cm (61 ft-lb, 83 N·m)

Lower the differential and remove the jack.

3. CONNECT PROPELLER SHAFT FLANGE FROM COMPANION FLANGE

4. CONNECT DRIVE SHAFT

Torque: 700 kg-cm (51 ft-lb, 69 N·m)

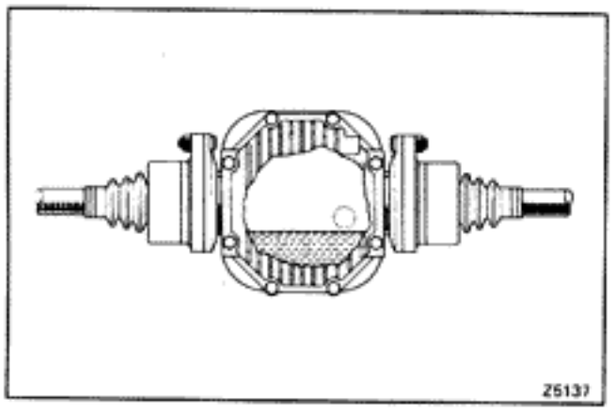

5. INSTALL DRAIN PLUG AND FILL DIFFERENTIAL WITH GEAR OIL

Hypoid gear oil: w/LSD use LSD oil only
SAE 90 above – 18°C (0°F)
SAE 80W or 80W – 90
at temperature below – 18°C (0°F)

Capacity: 1.2 liters (1.3 US qts, 1.1 Imp. qts)

Install a filler plug.

LIMITED SLIP DIFFERENTIAL

Preparation of disassembly

1. REMOVE DIFFERENTIAL (See page RA-20)
2. DISASSEMBLE DIFFERENTIAL CASE FROM CARRIER (See page RA-25)
3. DISASSEMBLE SIDE BEARING (See page RA-26)

NOTE: If the side gear or clutch member has been replaced, be sure to replace the thrust washer contacting this part. Any disassembled part that is to be reused must be reassembled to its former location.

COMPONENTS

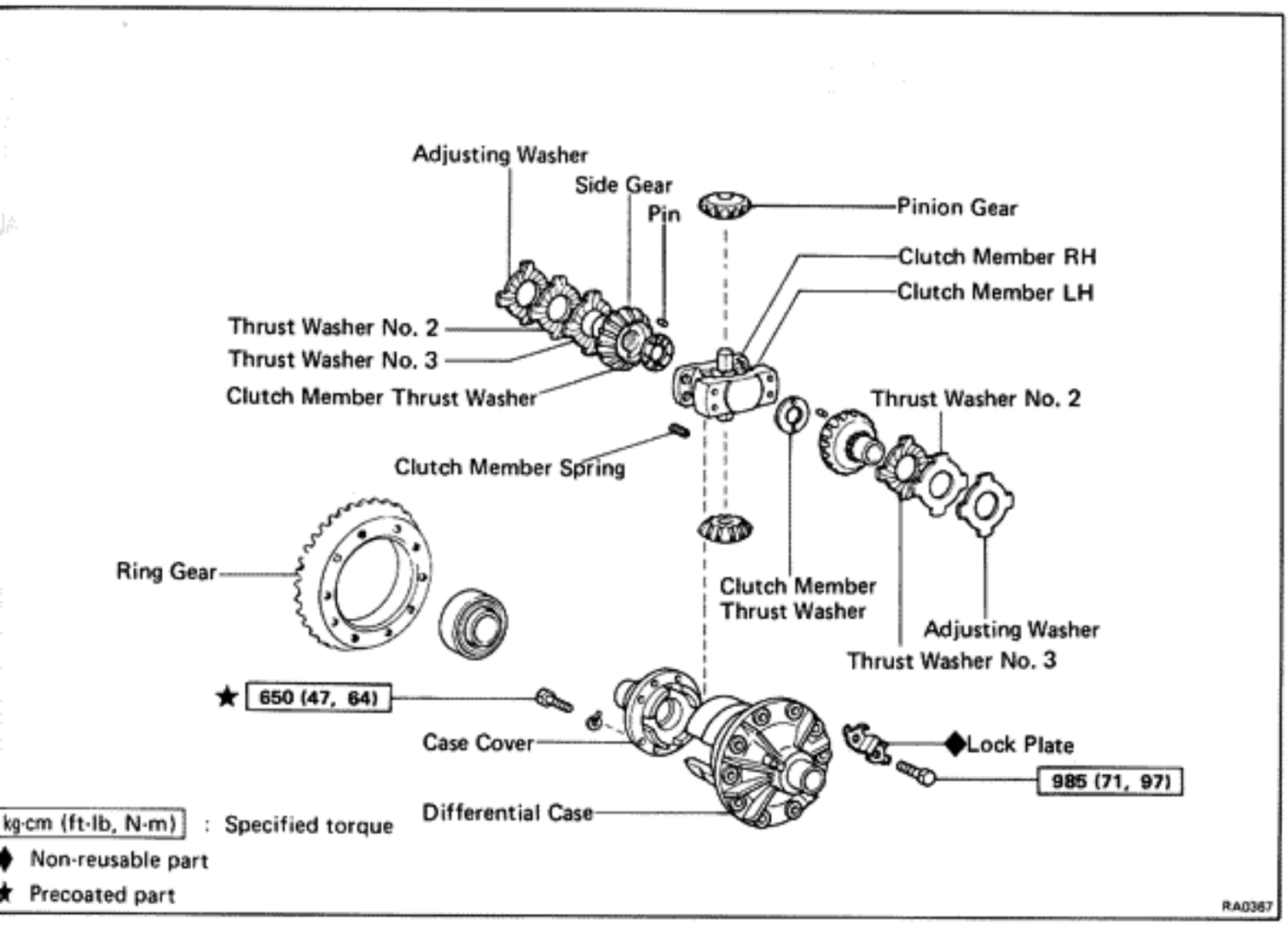

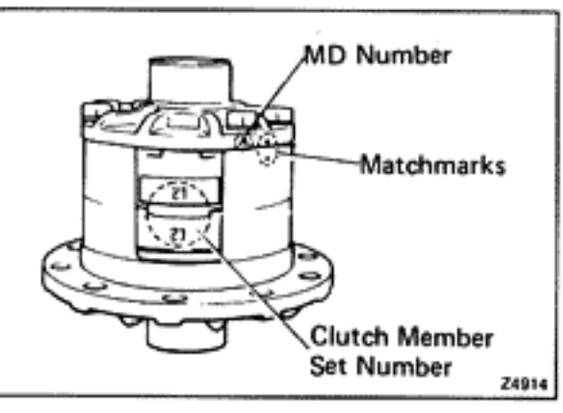

DISASSEMBLY OF LIMITED SLIP DIFFERENTIAL

1. PUT MATCHMARKS ON CASE AND CASE COVER
2. CHECK CASE COVER MARKS AND CLUTCH MEMBER RH, LH SET NUMBER

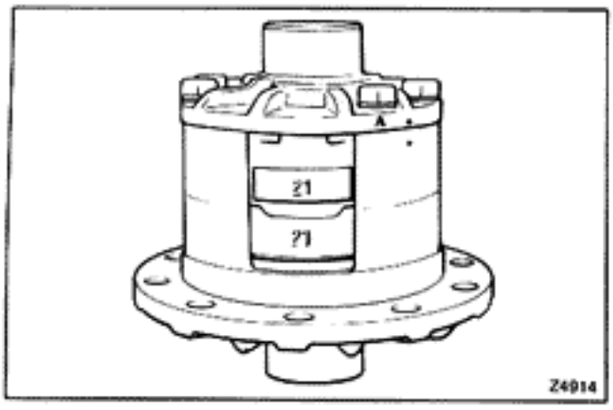

3. REMOVE CASE BOLTS AND CASE COVER WITH SIDE GEAR

NOTE: Case cover bolts have been treated with retaining compound making it difficult to loosen them.
Removal will be made easier by heating the assembly to around 150 °C (302° F) in an oil heater or similar means.

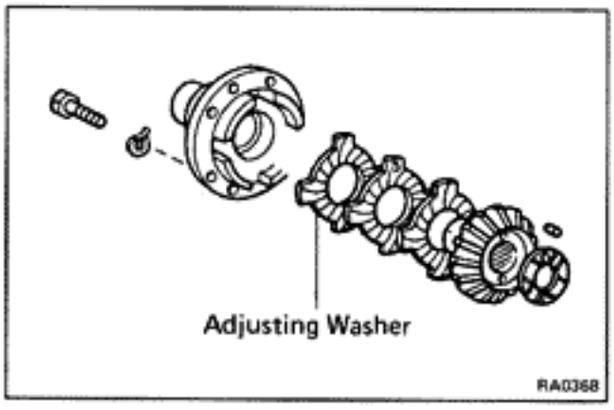

4. REMOVE FOLLOWING PARTS FROM CASE COVER:

(a) Clutch member thrust washer
(b) Side gear
(c) Thrust washer No. 3
(d) Thrust washer No. 2
(e) Adjusting washer

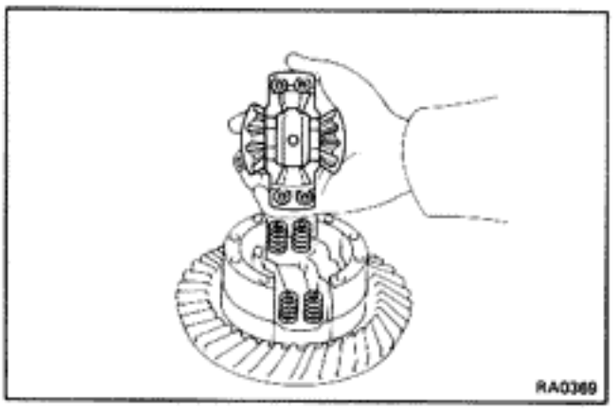

5. REMOVE FOLLOWING PARTS FROM DIFFERENTIAL CASE:

(a) Clutch member RH with pinion gear

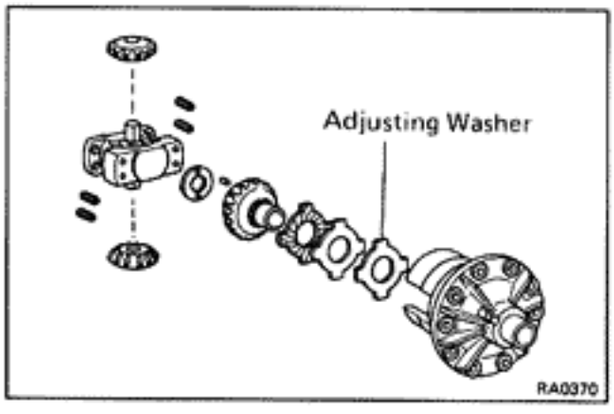

(b) Clutch member spring
(c) Clutch member LH
(d) Side gear and clutch member thrust washer
(e) Thrust washer No. 3
(f) Thrust washer No. 2
(g) Adjusting washer

INSPECTION AND ADJUSTMENT OF DIFFERENTIAL CASE

1. REPLACE PARTS THAT ARE DAMAGED OR WORN

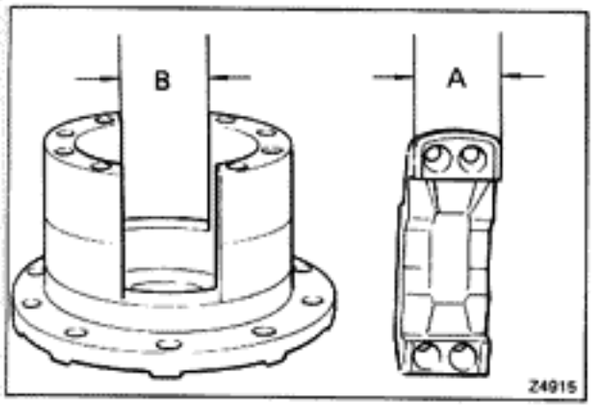

2. CHECK CLUTCH MEMBER LH AND DIFFERENTIAL CASE

Check the clearance between left clutch member and differential case.

Specifications mm (in.)

Clutch member (A)	41.975–42.000 (1.6526–1.6535)
Differential case (B)	42.000–42.025 (1.6535–1.6545)
Clearance	0–0.050 (0–0.0020)

3. ADJUST SIDE GEAR THRUST CLEARANCE

NOTE: Adjust the axial clearance inside the differential case by selecting a proper thickness adjusting washer as follows.

Standard clearance:
0.03 – 0.15 mm (0.0012 – 0.0059 in.)

(a) Clean the parts.

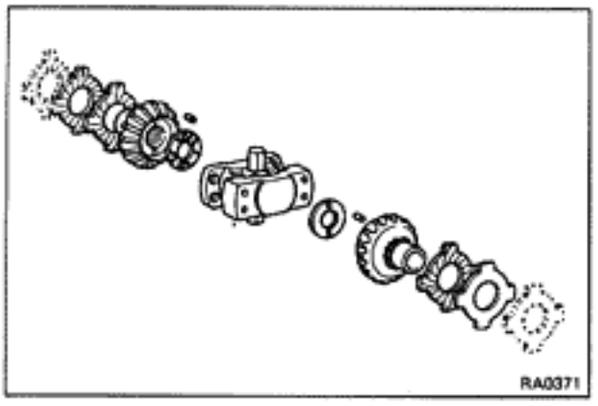

(b) Assemble the following parts to SST.

SST 09411-22011

NOTE: Do not assemble the adjusting washers and clutch member springs.

(1) Side gear thrust washer No. 2
(2) Side gear thrust washer No. 3
(3) Side gear
(4) Clutch member thrust washer
(5) Clutch member LH
(6) Clutch member RH
(7) Clutch member thrust washer
(8) Side gear
(9) Side gear thrust washer No. 3
(10) Side gear thrust washer No. 2

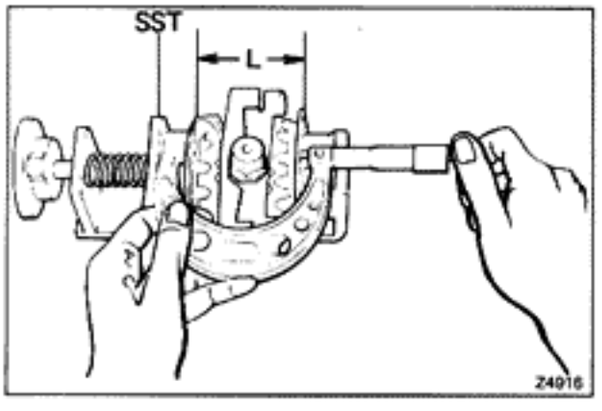

(c) Loosen the nut of SST and hold the parts with spring tension.

(d) Using a micrometer, measure dimension "L".

NOTE: Properly align the parts to be measured and measure dimension "L" several times. Take the average of the readings.

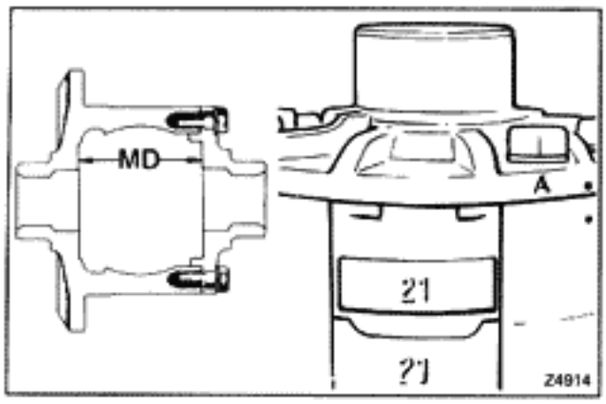

(e) Differential case mounting dimension (MD) has been classified and code letters are punched on the differential case.

Mounting dimension mm (in.)

A	74.98-75.01	(2.9520-2.9531)
B	75.01-75.04	(2.9531-2.9543)
C	75.04-75.07	(2.9543-2.9555)
D	75.07-75.10	(2.9555-2.9567)
E	75.10-75.13	(2.9567-2.9579)

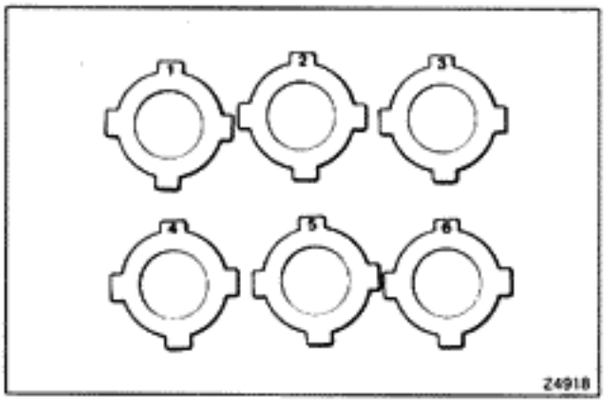

(f) Select the adjusting washers by combining the dimension "MD" (mark punched on case) and dimension "L" in the adjusting washer selection table.

Adjusting washer sizes mm (in.)

Mark	Thickness	Mark	Thickness
1	1.80 (0.0709)	4	1.95 (0.0768)
2	1.85 (0.0728)	5	2.00 (0.0787)
3	1.90 (0.0748)	6	2.05 (0.0807)

Adjusting washer selection table

"L" Measured assembled distance of thrust washer No. 1 and No. 2, etc. (mm)	Differential case code mark A	B	C	D	E	"L" Measured assembled distance of thrust washer No. 1 and No. 2, etc. (in.)
70.91						2.7917
.92				⑥+⑥		2.7921
.93						2.7925
.94						2.7929
.95				⑥+⑤		2.7933
.96						2.7937
.97						2.7941
.98			⑤+⑤			2.7945
.99						2.7949
71.00						2.7953
.01						2.7957
.02						2.7961
.03						2.7965
.04			⑤+④			2.7968
.05						2.7972
.06						2.7976
.07			④+④			2.7980
.08						2.7984
.09						2.7988
.10		④+③				2.7992
.11						2.7996
.12						2.8000
.13						2.8004
.14						2.8008
.15						2.8012
.16						2.8016
.17			③+③			2.8020
.18						2.8024
.19						2.8028
.20						2.8031
.21						2.8035
.22			③+②			2.8039
.23						2.8043
.24						2.8047
.25		②+②				2.8051
.26						2.8055
.27						2.8059
.28	②+①					2.8063
.29						2.8067
.30						2.8071
.31	①+①					2.8075
.32						2.8079

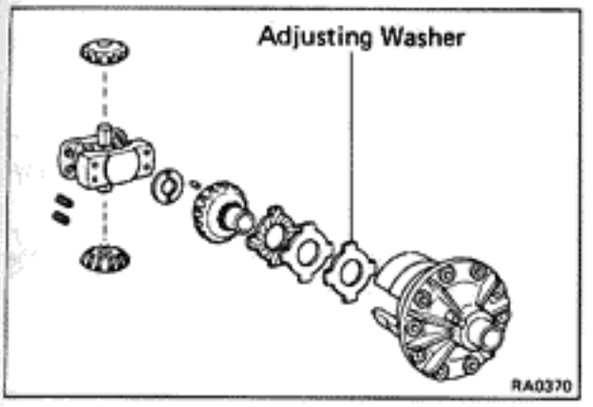

(g) Install following parts onto the differential case.
- Adjusting washer
- Thrust washer No. 2
- Thrust washer No. 3
- Side gear
- Clutch member thrust washer
- Clutch member LH

NOTE: Do not install the clutch member spring.
- Clutch member RH with pinion gear

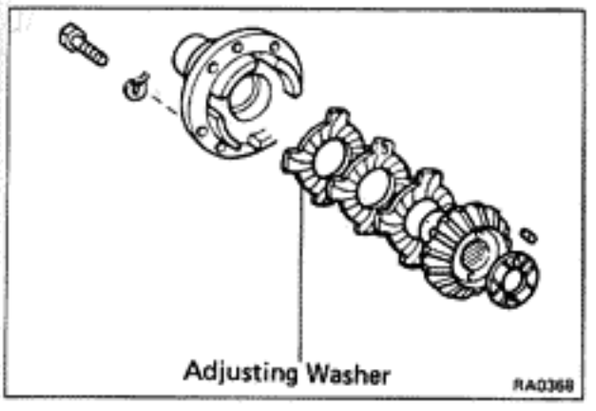

(h) Install following parts onto the differential case cover.
- Adjusting washer
- Thrust washer No. 2
- Thrust washer No. 3
- Side gear
- Clutch member thrust washer

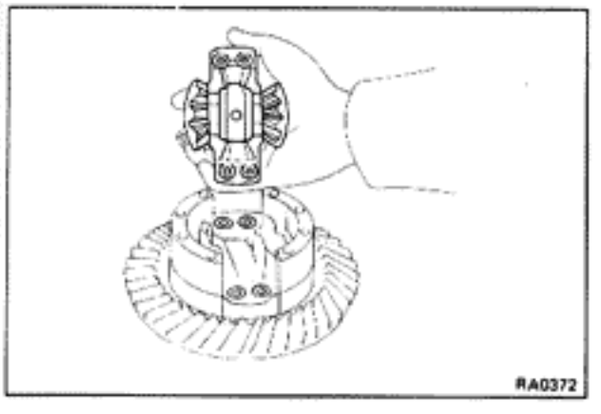

(i) Temporarily assemble the selected thrust washers together with the other "L" dimension measured parts into the case.

NOTE: Do not assemble the spring.

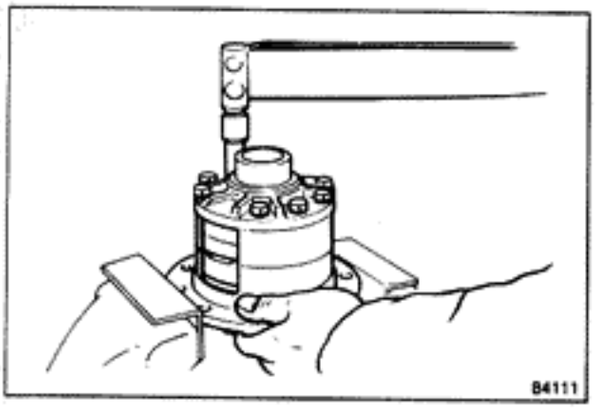

(j) Tighten the bolts to specified torque.

Torque: 650 kg-cm (47 ft-lb, 64 N·m)

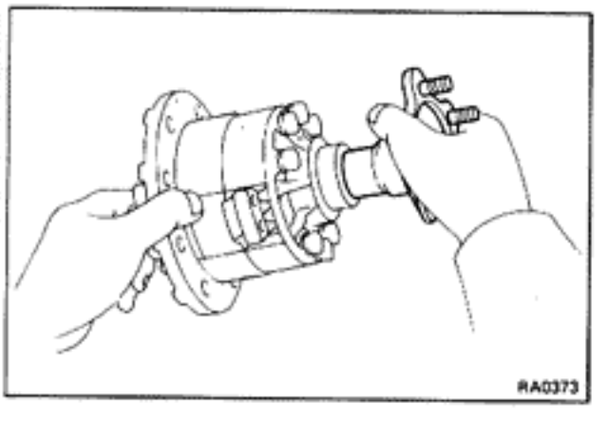

(k) Turn the side gears with the side gear shaft or other means and check to see that they turn smoothly.

NOTE: Remove the snap ring from side gear shaft.
Reselect thrust washers if the side gear does not turn smoothly.

(l) Disassemble the differential case.

ASSEMBLY OF DIFFERENTIAL CASE

(See page RA-37)

1. WASH DIFFERENTIAL CASE ASSEMBLY

Wash the differential case and bolts with trichloroethylene.

NOTE: Other cleaning solvent may be used if it has the same degreasing effect as trichloroethylene.

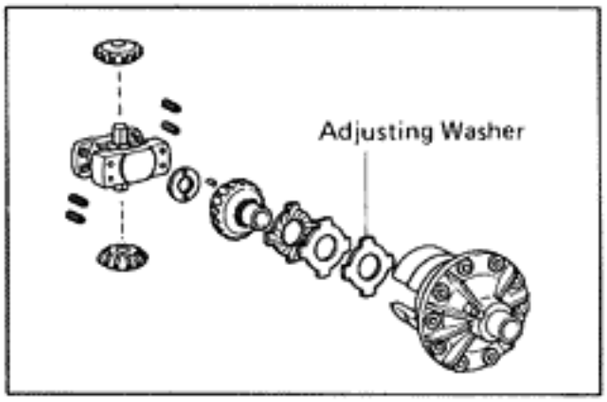

2. INSTALL FOLLOWING PARTS ON TO DIFFERENTIAL CASE

NOTE: Coat the parts with gear oil for LSD.

- Adjusting washer

NOTE: Face the oil groove toward the clutch plate.

- Thrust washer No. 2
- Thrust washer No. 3
- Side gear
- Clutch member thrust washer

NOTE: Face the oil groove toward the clutch member.

- Clutch member LH
- Clutch member spring
- Clutch member RH with pinion gear

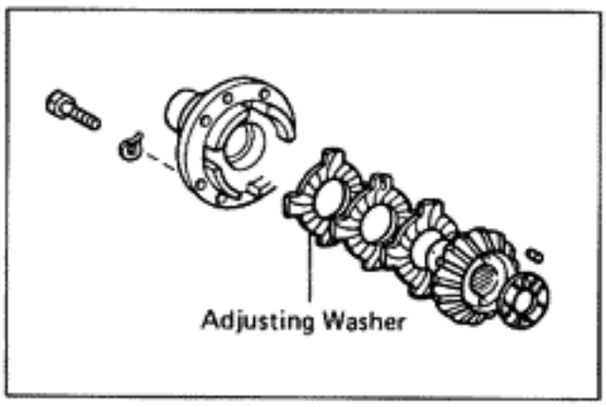

3. INSTALL FOLLOWING PART ONTO DIFFERENTIAL CASE COVER

- Adjusting washer

NOTE: Face the oil groove toward the clutch plate.

- Thrust washer No. 2
- Thrust washer No. 3
- Side gear
- Clutch member thrust washer

NOTE: Face the oil groove toward the clutch member.

Align the marks on the case and case cover.

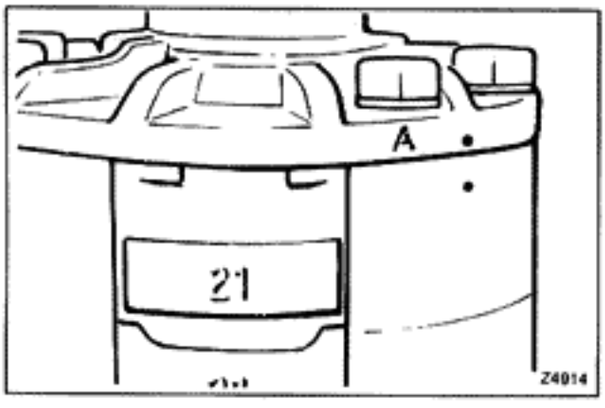

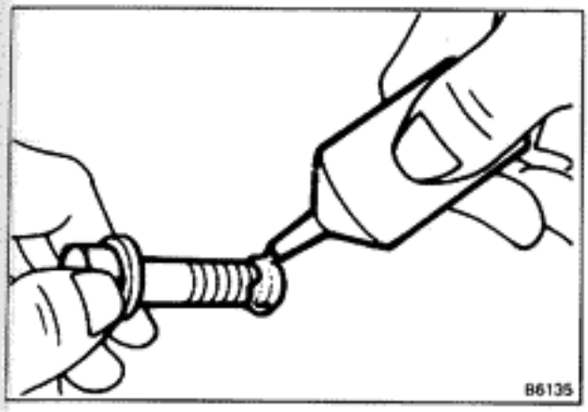

4. **INSTALL CASE COVER BOLTS**

(a) Apply retaining compound to the bolts.

NOTE: Use Lock-Tight as the retaining compound.

NOTE: Method of applying Lock-Tight.

(1) Apply Lock-Tight Primer T to the case threads and the mounting bolts, and allow to dry thoroughly.

(2) Apply Lock-Tight to the case threads and the bolts and install the bolts.

(3) Allow to stand at least 3 hours after tightening the bolts. [In cold weather, heat to 30 – 50°C (86 – 122°F) before letting stand.]

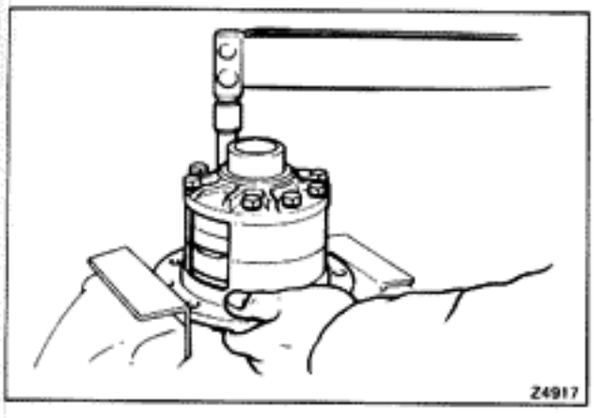

(b) Tighten the bolts evenly and gradually.

Torque: 650 kg-cm (47 ft-lb, 64 N·m)

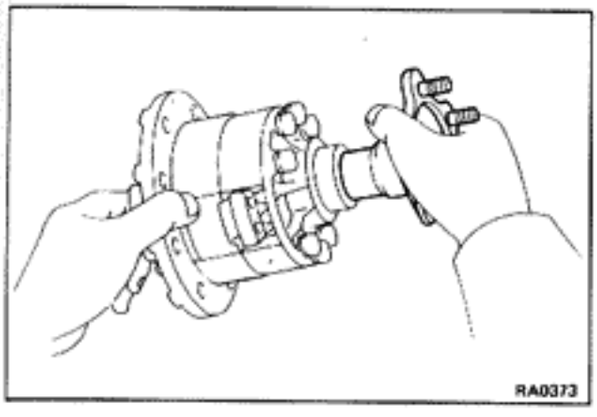

5. **CHECK SIDE GEAR THRUST CLEARANCE**

Turn the side gear with side gear shaft or other means and check to see that they turn smoothly.

6. **INSTALL SIDE BEARING (See page RA-28)**

INSTALLATION OF DIFFERENTIAL

1. **INSTALL DIFFERENTIAL CASE IN CARRIER (See page RA-30)**

2. **INSTALL DIFFERENTIAL (See page RA-36)**

IRS TYPE REAR SUSPENSION

COMPONENTS

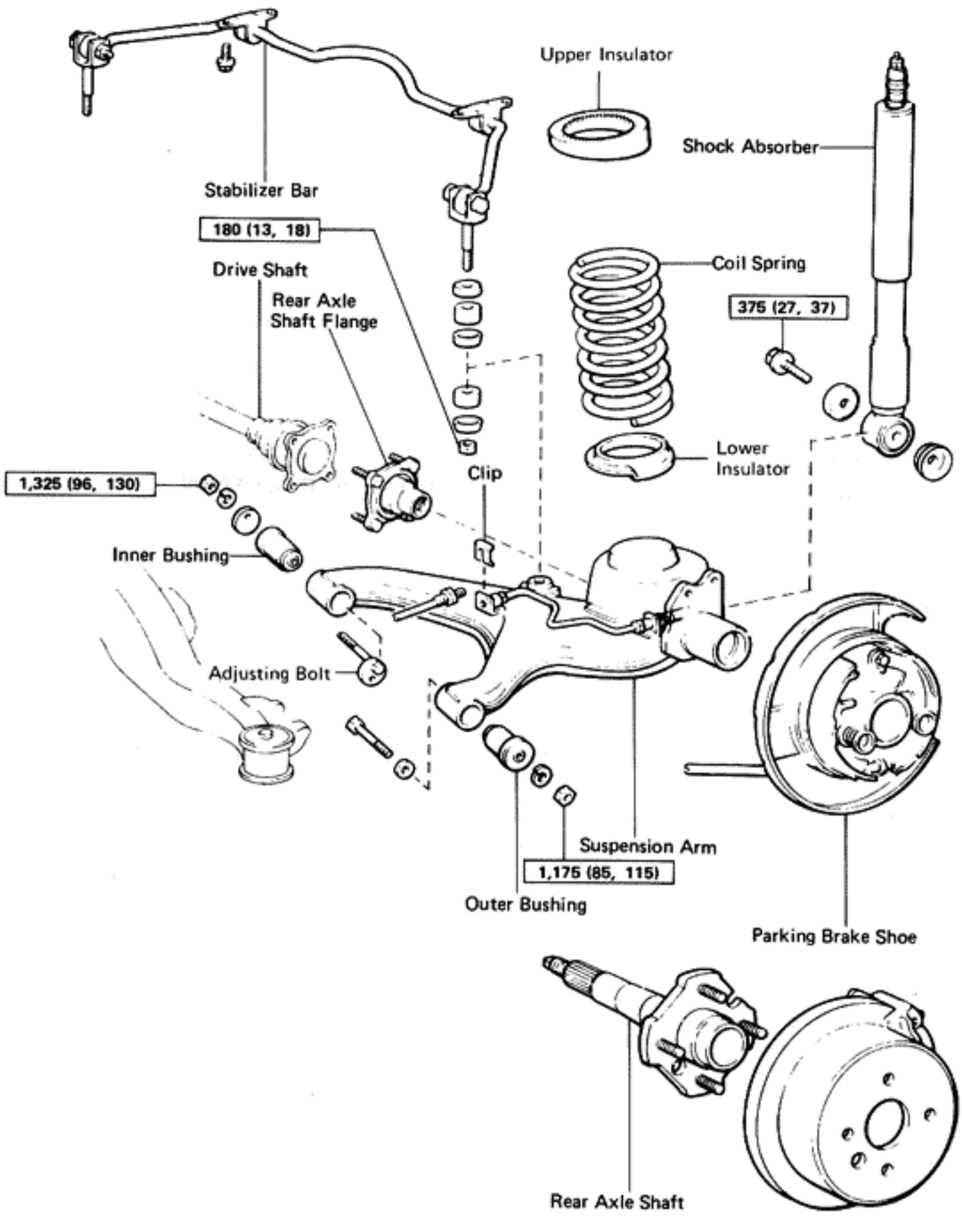

kg-cm (ft-lb, N·m) : Specified torque

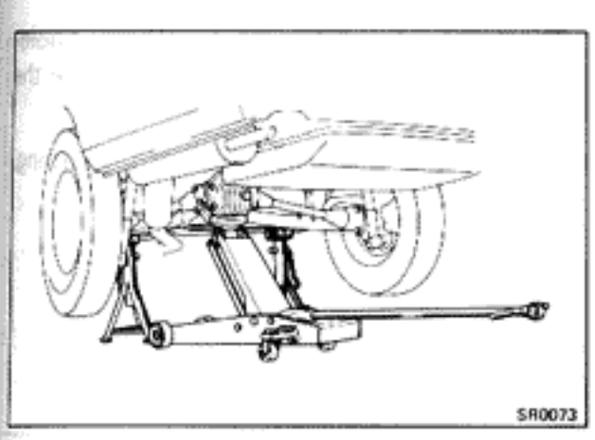

Coil Spring and Rear Shock Absorber

REMOVAL OF COIL SPRING AND SHOCK ABSORBER

1. JACK UP VEHICLE

Jack up the differential carrier assembly and support the rear suspension member with stands.

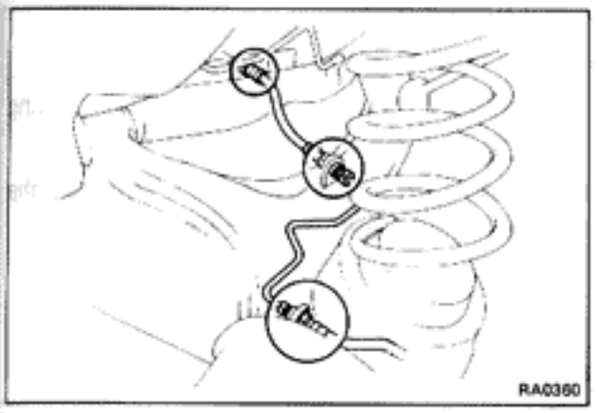

2. REMOVE BRAKE HOSE CLIPS

3. REMOVE STABILIZER BAR END

Disconnect the nut, cushion and retainer from suspension arm.

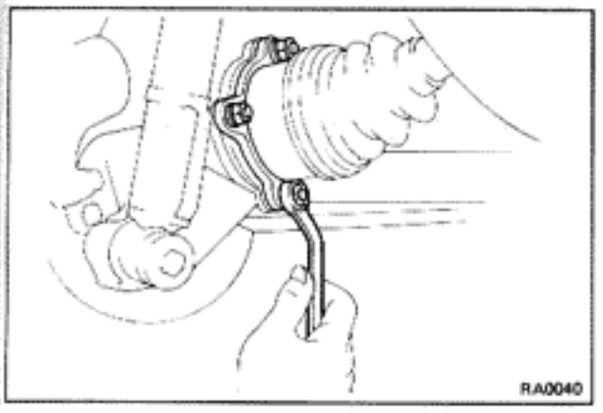

4. REMOVE DRIVE SHAFT

Remove the nut holding the rear drive shaft.

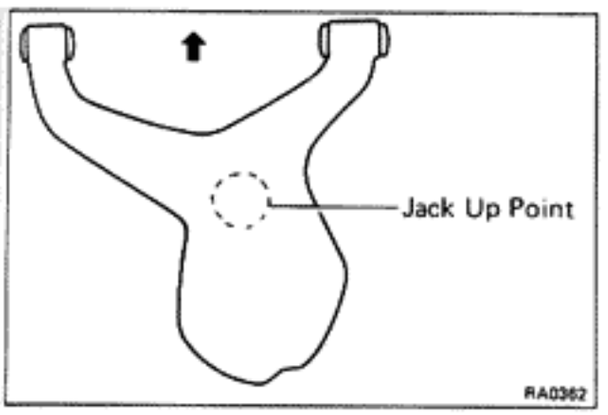

5. LEAVE A JACK UNDER SUSPENSION ARM

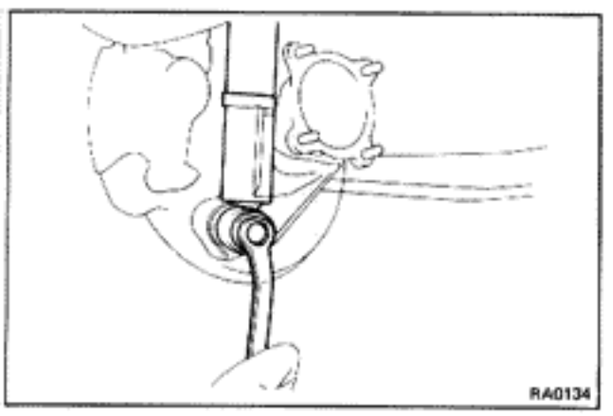

6. REMOVE REAR SHOCK ABSORBER

(a) Remove the bolt holding the shock absorber to the rear suspension arm and disconnect the shock absorber.

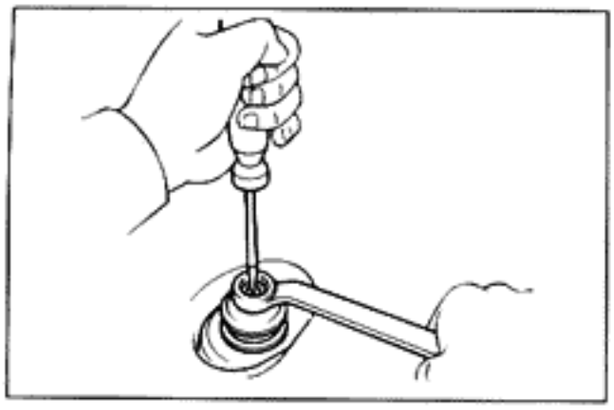

(b) If replacing the shock absorber, remove the nut holding the shock absorber to the body, and remove the shock absorber.

NOTE: Use a screwdriver to keep the shaft from turning.

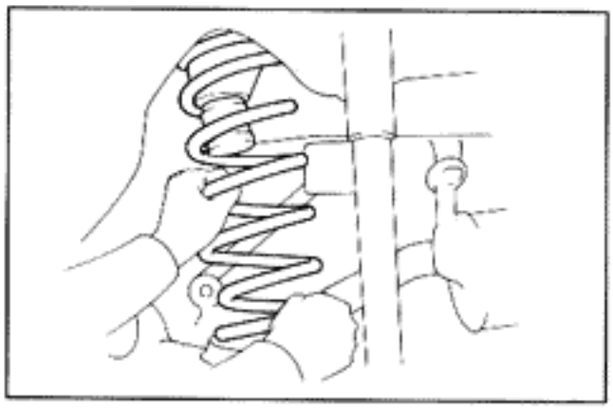

7. REMOVE REAR COIL SPRING

(a) Start to lower the rear suspension arm.

NOTE: Be careful not to pull the brake line and parking brake cable.

(b) While lowering the rear suspension arm, remove the coil spring and upper and lower insulators.

INSTALLATION OF COIL SPRING AND SHOCK ABSORBER

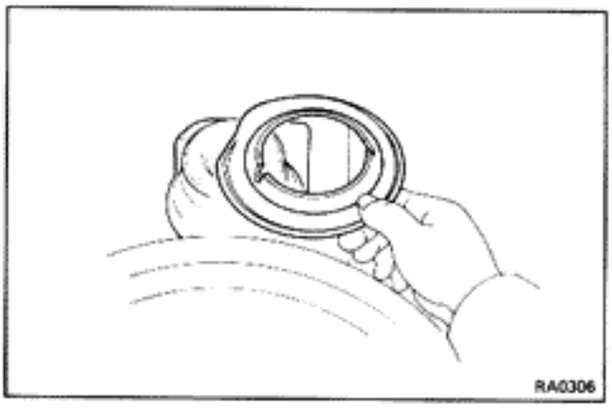

1. PUT LOWER INSULATOR ON REAR SUSPENSION ARM

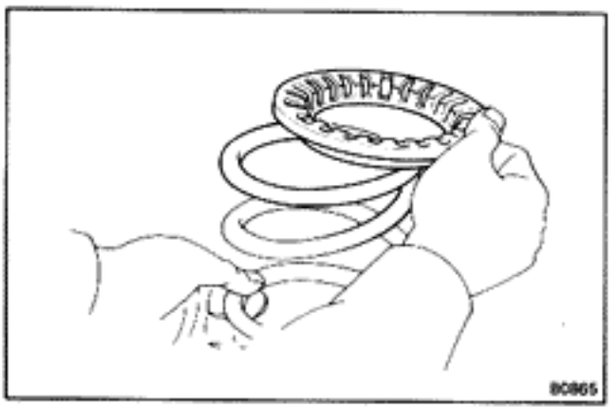

2. PUT UPPER INSULATOR ON COIL SPRING

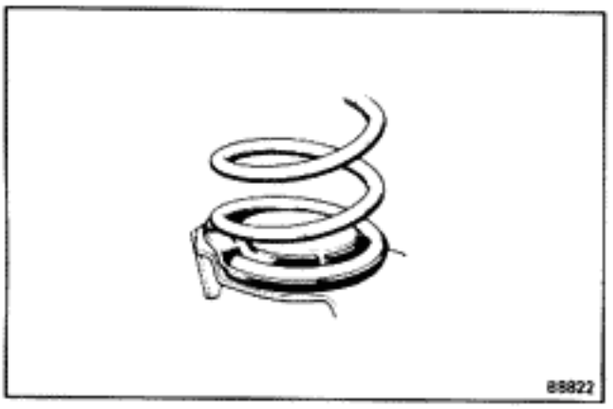

3. INSTALL COIL SPRING

4. CHECK POSITION OF LOWER INSULATOR

(a) Jack up the rear suspension arm.

(b) Check that the lower insulator is installed correctly.

If the insulator is not in correct position, reinstall the coil spring.

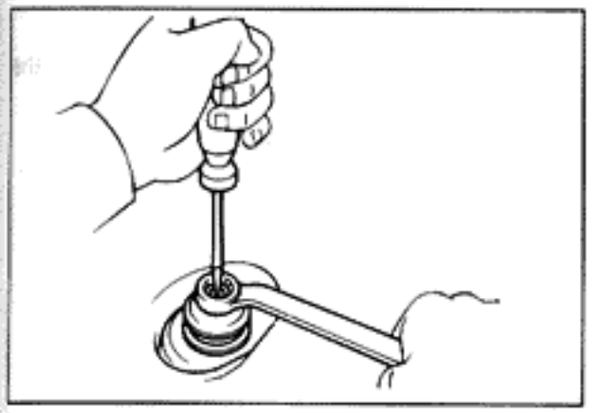

5. INSTALL SHOCK ABSORBER

(a) Connect the shock absorber to the body with the nuts. Hold the shaft with a screwdriver.

Torque the nut.

Torque: 250 kg-cm (18 ft-lb, 25 N·m)

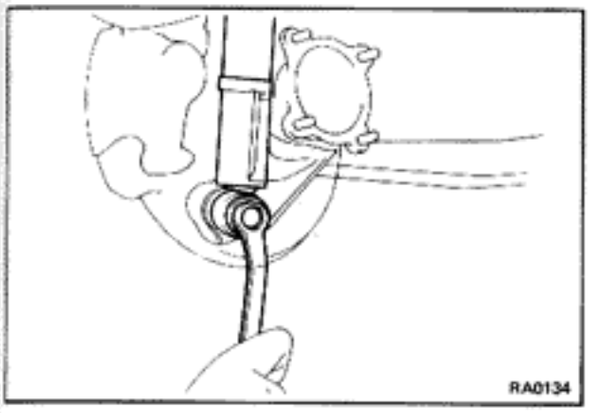

(b) Connect the shock absorber to the rear suspension arm with the bolt. Torque the bolt.

Torque: 375 kg-cm (27 ft-lb, 37 N·m)

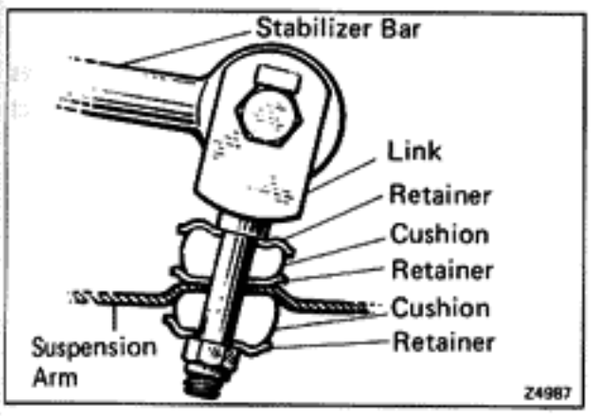

6. CONNECT STABILIZER BAR END TO REAR SUSPENSION

Connect the cushion, retainer to the rear suspension arm with the nut. Torque the nut.

Torque: 180 kg-cm (13 ft-lb, 18 N·m)

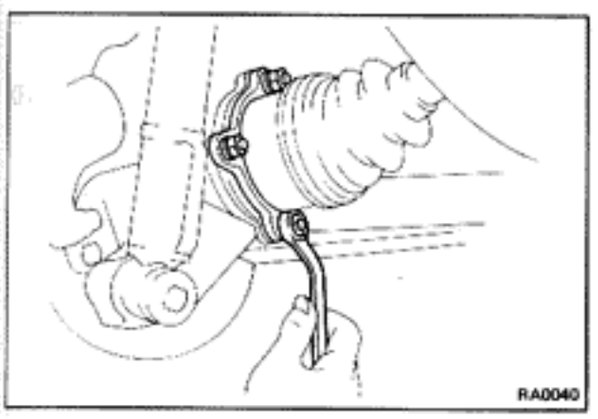

7. INSTALL DRIVE SHAFT

Connect the drive shaft to the rear axle shaft with the nuts.

Torque: 700 kg-cm (51 ft-lb, 69 N·m)

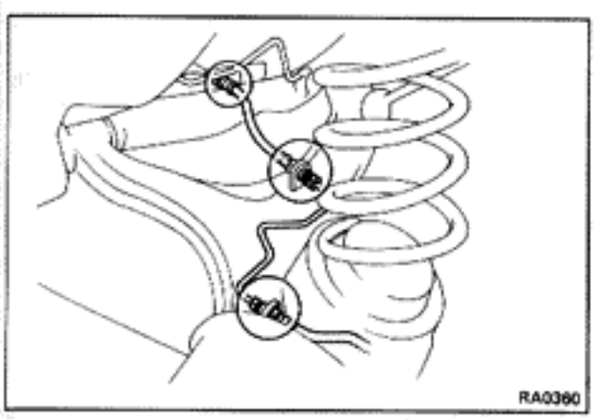

8. INSTALL BRAKE HOSE CLIPS

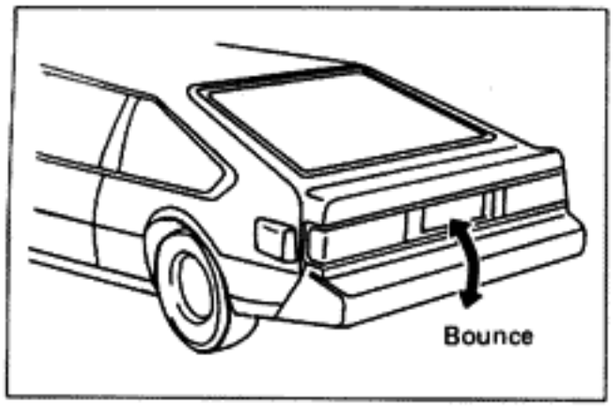

9. REMOVE STAND

Remove the stands and bounce the car to stabilize the suspension.

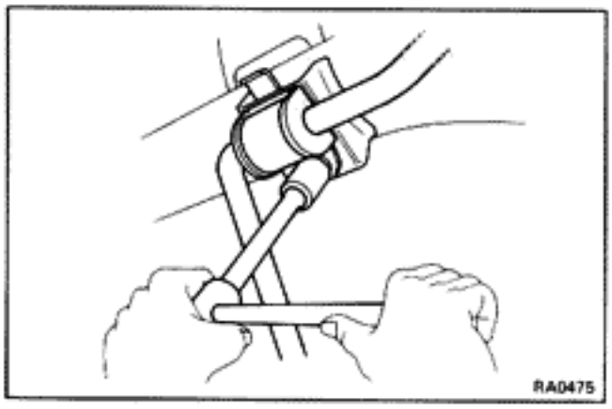

Rear Stabilizer Bar

(See page RA-44)

REMOVAL OF REAR STABILIZER BAR

1. REMOVE STABILIZER BAR BRACKETS

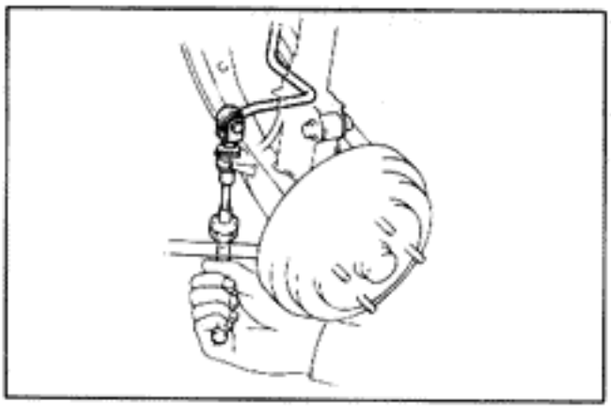

2. REMOVE STABILIZER BAR FROM ARMS

Remove the nuts, cushions, and links holding both sides of the stabilizer bar from suspension arms, and disconnect the stabilizer bar.

INSTALLATION OF REAR STABILIZER BAR

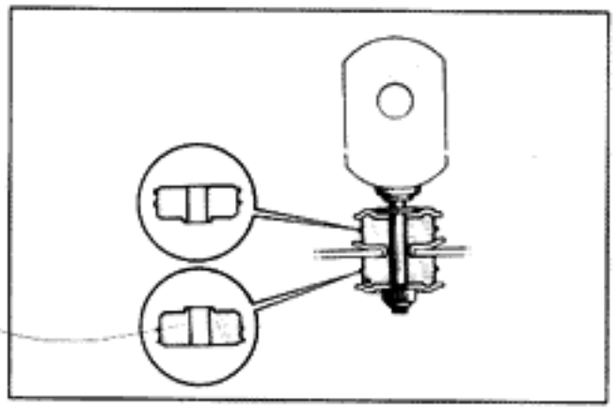

1. ASSEMBLE STABILIZER LINK SUBASSEMBLY AND INSTALL LINK TO ARM

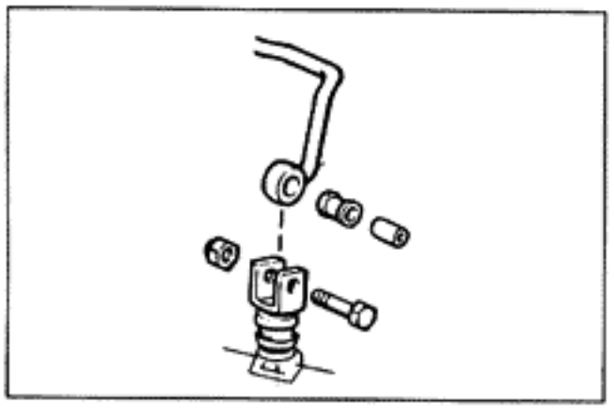

2. INSTALL STABILIZER BAR TO LINK

Connect the stabilizer bar on both sides of the link with bolts, collars, cushions and nut.

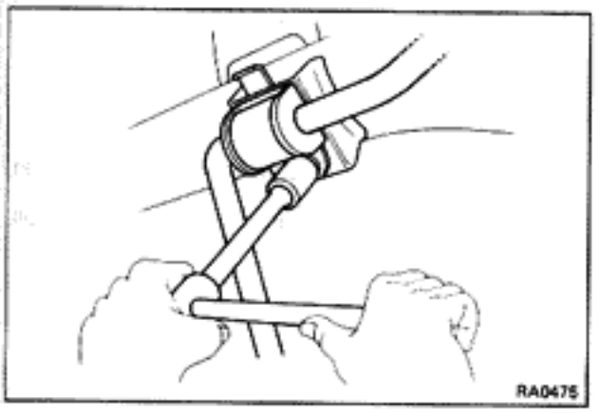

3. INSTALL STABILIZER BAR BRACKET TO DIFFERENTIAL SUPPORT MEMBER

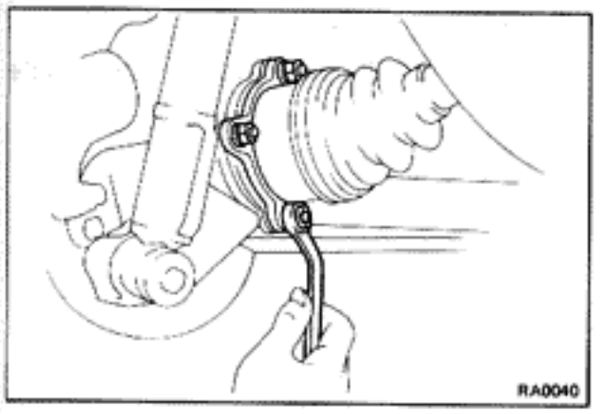

Rear Suspension Arm

(See page RA-44)

REMOVAL OF REAR SUSPENSION ARM

1. DISCONNECT STABILIZER BAR FROM LOWER ARM
2. DISCONNECT REAR DRIVE SHAFT
3. REMOVE REAR AXLE SHAFT FLANGE
4. REMOVE BRAKE DRUM OR DISC ROTOR
5. REMOVE REAR AXLE SHAFT
6. REMOVE BACKING PLATE OR DUST COVER
7. DISCONNECT BRAKE LINE
8. DISCONNECT SHOCK ABSORBER FROM LOWER ARM
9. REMOVE COIL SPRING

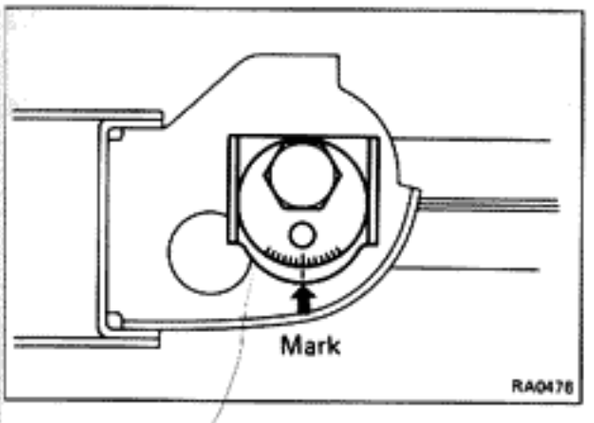

10. REMOVE REAR SUSPENSION ARM AND LOWER CONTROL BUSHING

NOTE: Remember where the complete mark is when removing the suspension arm.

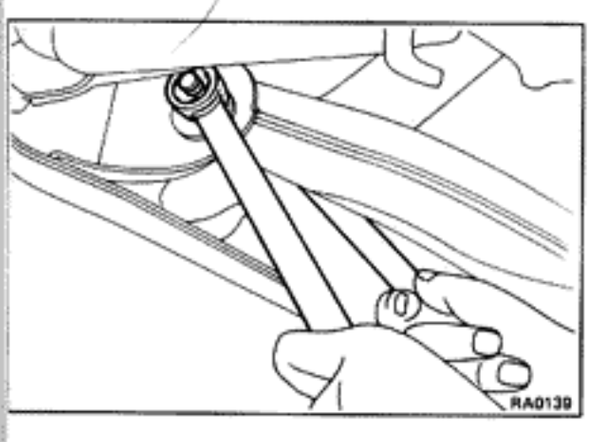

(a) Remove the two mounting bolts.
(b) Remove the camber adjusting cam.
(c) Remove the suspension arm.

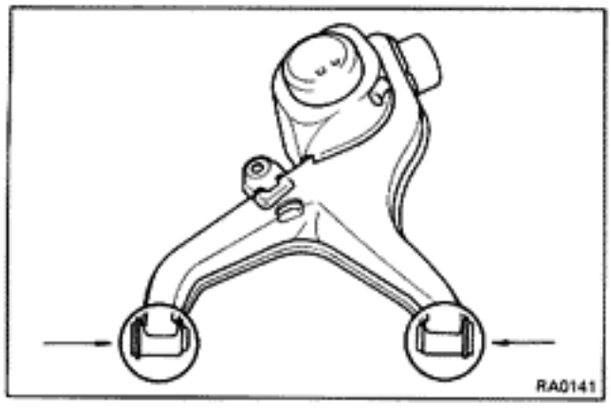

REPLACEMENT OF REAR SUSPENSION ARM BUSHING

1. CHECK ARM AND BUSHING

(a) Check the bushing for wear, cracks or deterioration.

(b) Check the arm for damage, cracks or deformation.

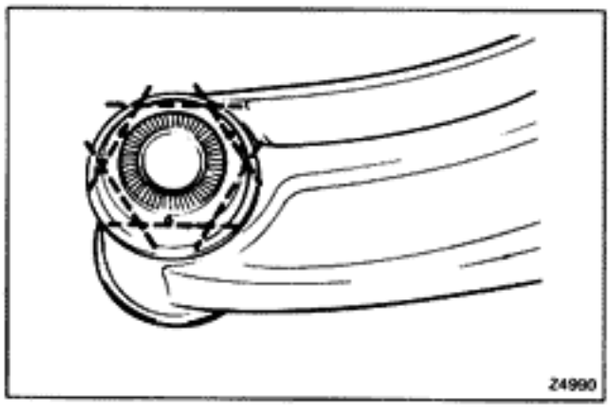

2. REPLACE INNER AND OUTER BUSHING

(a) Cut off the flange tip of the bushing as shown in the figure.

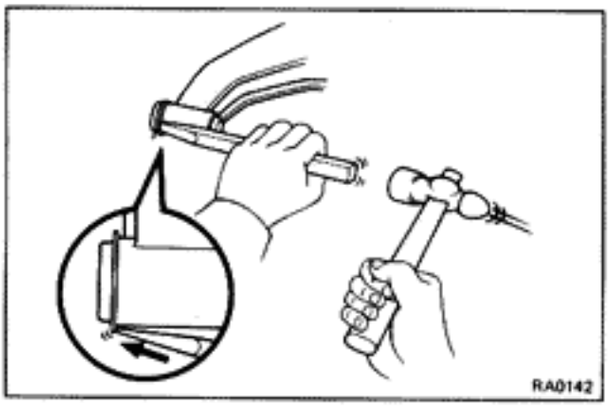

(b) Bend the remaining portions inward with a cold chisel.

NOTE: Be careful not to damage the flange.

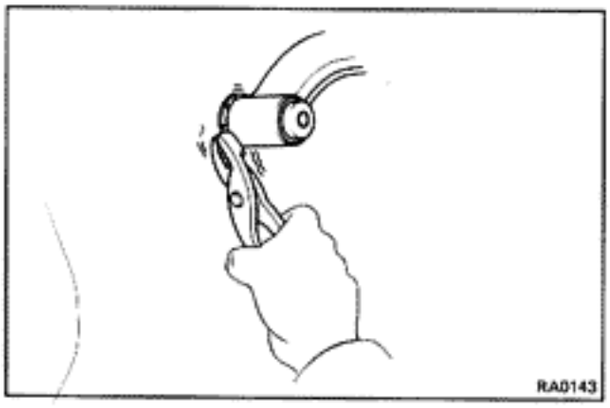

(c) Bend in the flange tips and pull off the flange with a pair of pliers.

Bend the remaining flange portion so the SST can be installed to the lower arm.

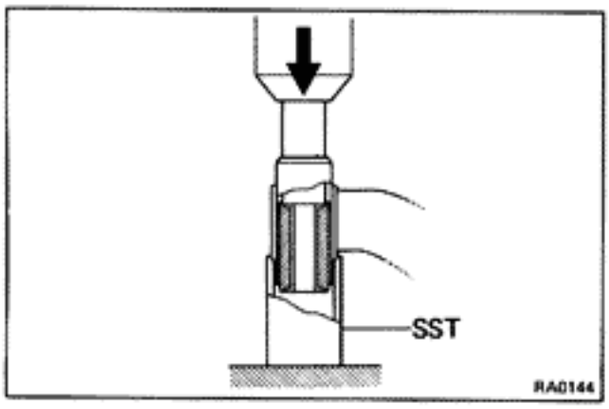

(d) Using SST, press out the outer bushing from the arm.

SST 09710-22041
(09710-02040, 09710-02050, 09710-02060)

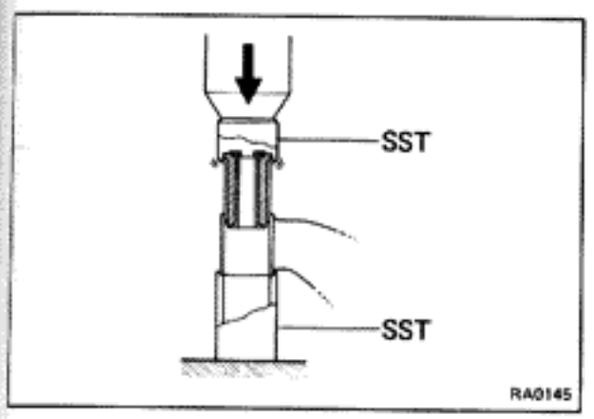

(e) Using SST, press the outer and inner bushings into the arm.

SST 09710-22041 (09751-02050, 09751-02060)

NOTE: Do not allow grease or oil to get on the bushings.

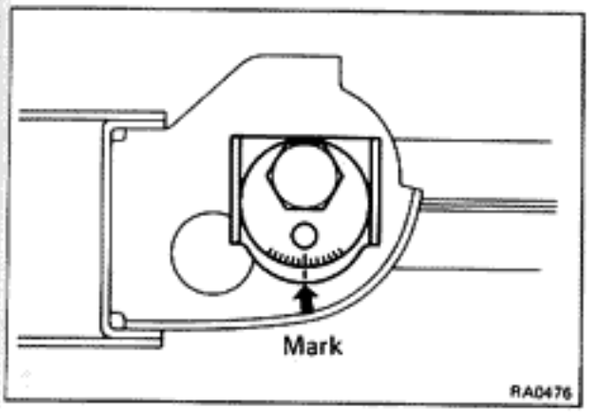

INSTALLATION OF REAR SUSPENSION ARM

1. INSTALL ARM

(a) Align the complete mark at the same position it was before removal.

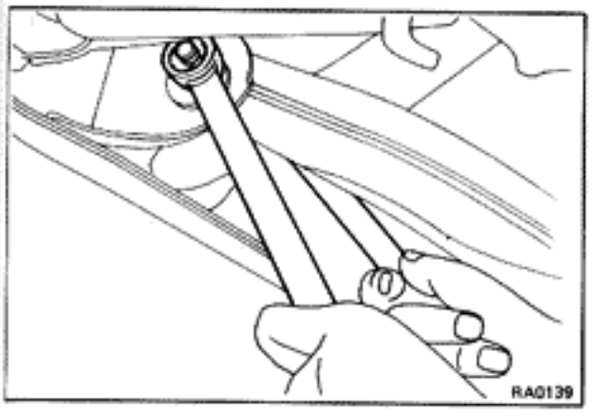

(b) Provisionally tighten the suspension arm.

2. INSTALL COIL SPRING
3. INSTALL SHOCK ABSORBER
4. INSTALL BACKING PLATE OR DUST COVER
5. CONNECT BRAKE LINE
6. CONNECT PARKING BRAKE CABLE
7. INSTALL REAR AXLE SHAFT
8. INSTALL BRAKE DRUM OR DISC ROTOR
9. CONNECT REAR DRIVE SHAFT
10. CONNECT STABILIZER BAR TO LOWER ARM

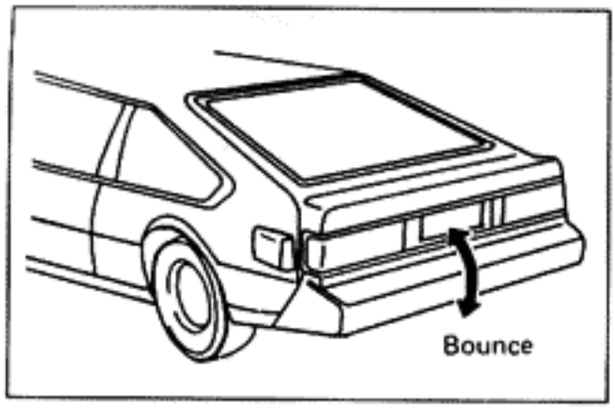

11. LOWER VEHICLE

Lower the vehicle and bounce it several times.

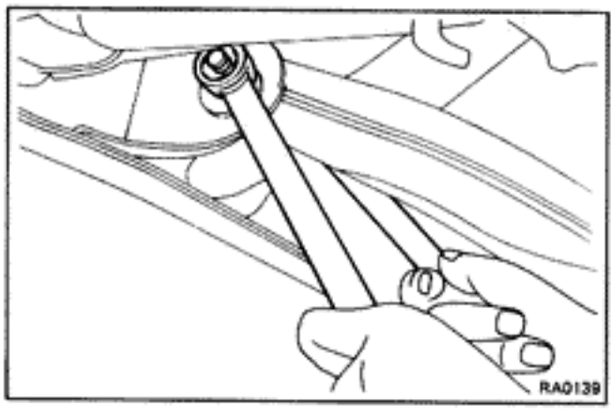

12. TIGHTEN SUSPENSION ARM

Torque: Inside 1,325 kg-cm (96 ft-lb, 130 N·m)
Outside 1,175 kg-cm (85 ft-lb, 115 N·m)

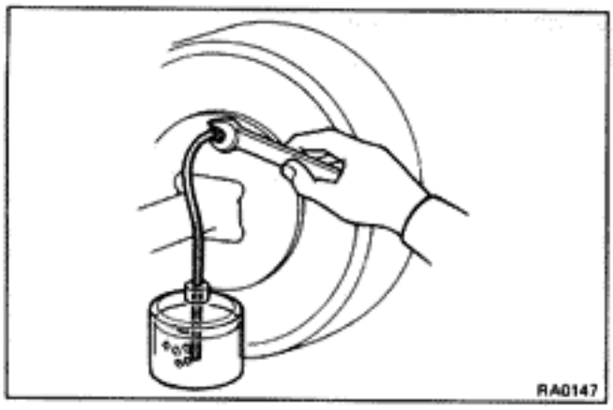

13. CHECK AND ADJUST REAR WHEEL ALIGNMENT
(See page RA-3)

14. BLEED BRAKE LINE

DIFFERENTIAL SUPPORT MEMBER

COMPONENTS

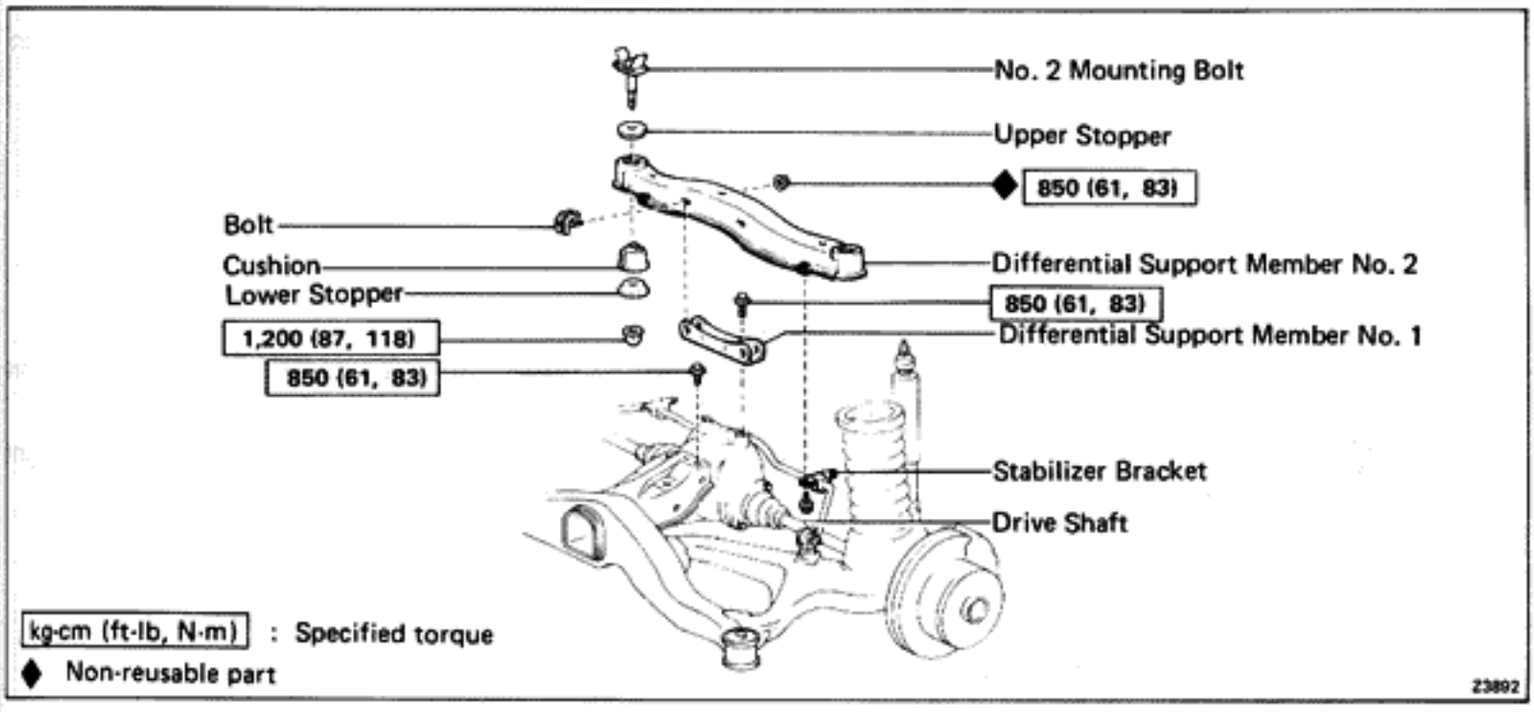

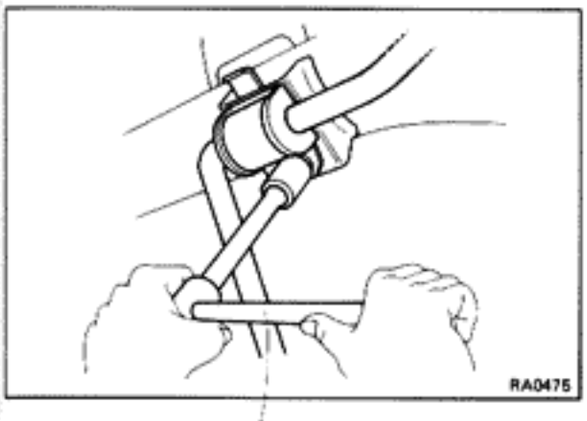

REMOVAL OF DIFFERENTIAL SUPPORT MEMBER

1. **REMOVE STABILIZER BRACKET**
2. **REMOVE DIFFERENTIAL SUPPORT MEMBER NO. 1 MOUNTING BOLT NUTS**
3. **DISCONNECT DRIVE SHAFT FROM DIFFERENTIAL**

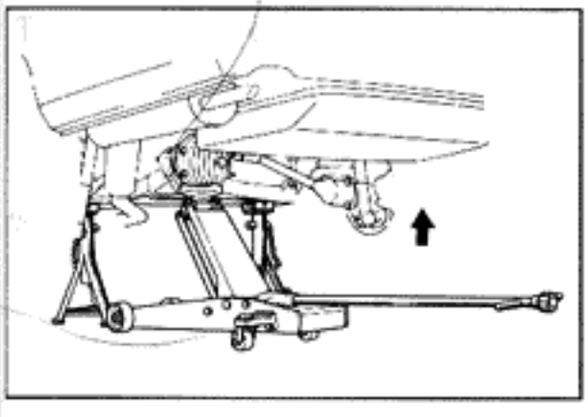

4. **REMOVE DIFFERENTIAL CARRIER BOLTS**

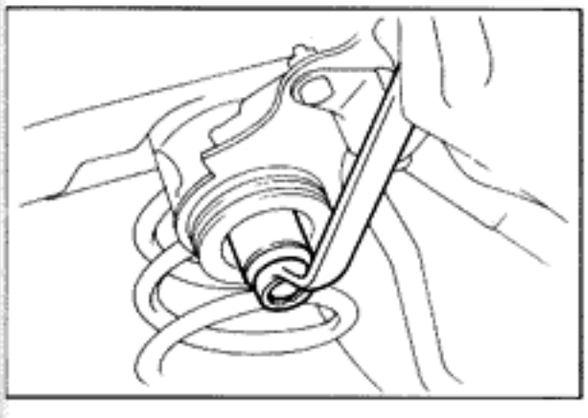

5. **REMOVE DIFFERENTIAL SUPPORT MEMBER**
   (a) Remove the No. 2 mounting bolt nuts and lower stopper.
   (b) Remove the differential support member with the upper stopper.

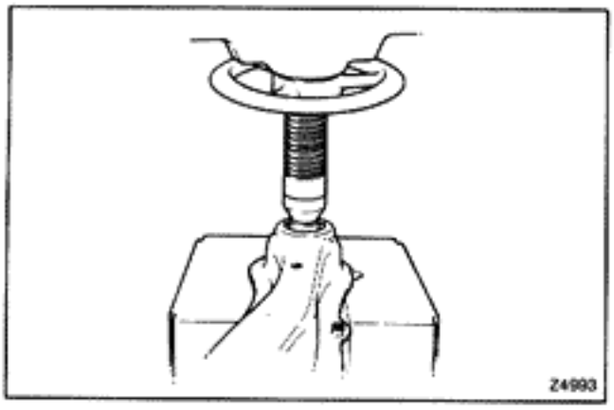

REPLACEMENT OF DIFFERENTIAL SUPPORT MEMBER CUSHION

1. REMOVE CUSHION

Using a press, press out the cushion from the support member.

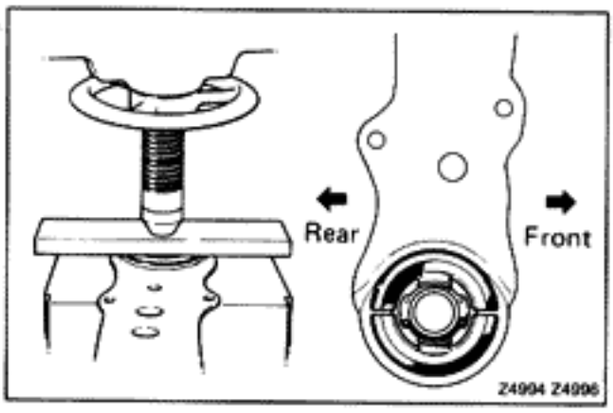

2. INSTALL NEW CUSHION

Using a press, press the new cushion into the support member.

NOTE: Assemble the cushion with the recesses at right angle to the support member.

3. CHECK DIFFERENTIAL SUPPORT MEMBER

If the support member is damaged or worn, replace it.

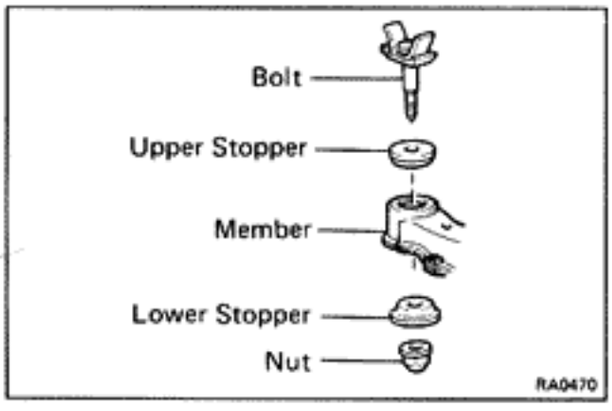

INSTALLATION OF DIFFERENTIAL SUPPORT MEMBER

1. INSTALL SUPPORT MEMBER

(a) Put upper stopper on member.

(b) Install the support member and lower stopper with nuts.

NOTE: Hand tighten the nuts.

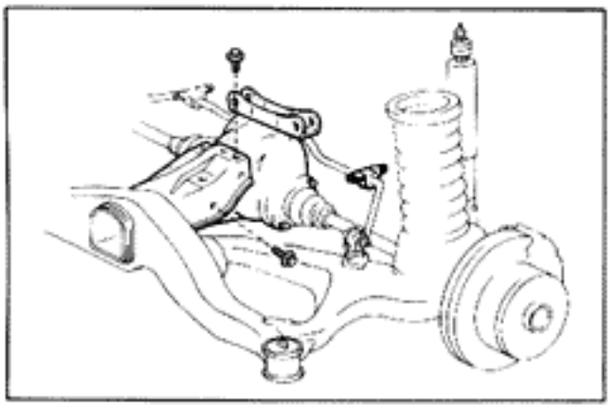

2. INSTALL DIFFERENTIAL CARRIER BOLT

Install the differential carrier bolts.

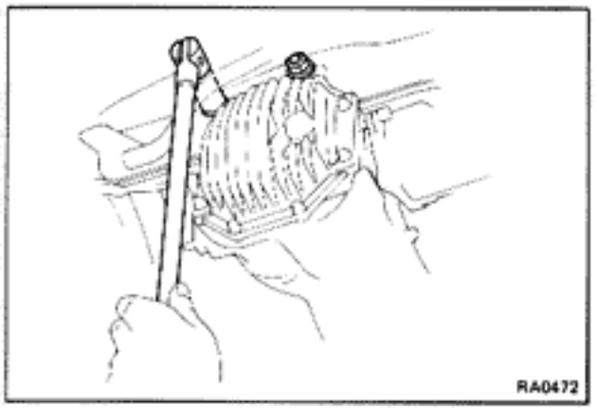

3. **INSTALL DIFFERENTIAL SUPPORT MEMBER MOUNTING BOLT NO. 1**

Install the No. 1 mounting bolts to the support member with nuts. Torque the nuts.

Torque: 850 kg-cm (61 ft-lb, 83 N·m)

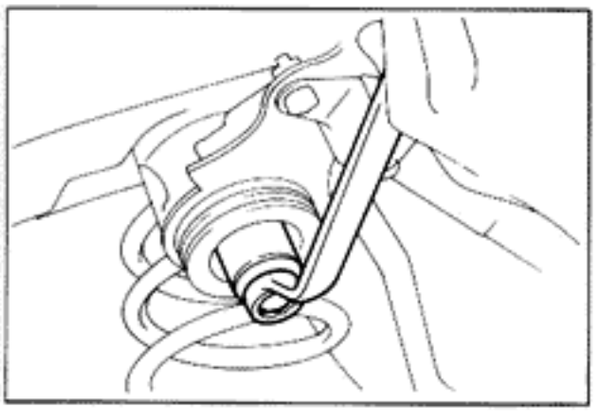

4. **TIGHTEN SUPPORT MEMBER NUTS**

Torque the nuts.

Torque: 1,200 kg-cm (87 ft-lb, 118 N·m)

5. **CONNECT DRIVE SHAFT**

6. **INSTALL STABILIZER BAR BRACKET**
(See page RA-49)

BRAKE SYSTEM

	Page
PRECAUTIONS	BR-2
TROUBLESHOOTING	BR-2
CHECKS AND ADJUSTMENTS	BR-6
MASTER CYLINDER	BR-9
BRAKE BOOSTER	BR-12
FRONT BRAKE	BR-14
REAR BRAKE	BR-20
BRAKE HOSES AND TUBES	BR-31

PRECAUTIONS

1. **Care must be taken to replace each part properly as it could affect the performance of the brake system and result in a driving hazard. Replace the parts with parts of the same part number or equivalent.**
2. **It is very important to keep parts and area clean when repairing the brake system.**

TROUBLESHOOTING

Problem	Possible cause	Remedy	Page
Low or spongy pedal	Brake pads worn	Replace brake pads	BR-14,20
	Leak in brake system	Repair leak	
	Master cylinder faulty	Repair or replace master cylinder	BR-9
	Air in brake system	Bleed brake system	BR-7
	Cylinder faulty	Repair cylinder	BR-14,20
	Piston seals worn or damaged	Repair brake calipers	BR-16,22
Brakes drag	Parking brake out of adjustment	Adjust parking brake	BR-8, 30
	Binding parking brake wire	Repair as necessary	
	Booster push rod out of adjustment	Adjust push rod	BR-12
	Return spring faulty	Replace spring	BR-26
	Brake line restricted	Repair as necessary	
	Pads cracked or distorted	Replace brake pads	BR-14,20
	Caliper piston sticking	Repair as necessary	BR-16,22
	Adjuster broken	Replace adjuster	BR-26
	Master cylinder faulty	Repair or replace master cylinder	BR-9
Brakes pull	Tires improperly inflated	Inflate tires to proper pressure	
	Oil or grease on pads	Check for cause/replace pads	BR-14,20
	Brake pads distorted, worn or glazed	Replace brake pads or shoes	BR-14,20
	Disc out of round	Replace disc	BR-14,20
	Return spring faulty	Replace spring	BR-26
	Cylinder faulty	Repair cylinder	BR-14,20
	Piston frozen in caliper	Repair caliper	BR-16,22
	Disc brake pad sticking	Replace pads	BR-14,20

TROUBLESHOOTING (Cont'd)

Problem	Possible cause	Remedy	Page
Hard pedal but brakes inefficient	Oil or grease on pads	Check for cause/replace pads	BR-14,20
	Brake pads distorted	Replace brake pads	BR-14,20
	Piston frozen in caliper	Repair caliper	BR-16,22
	Brake booster faulty	Repair booster	BR-12
	Vacuum leaks	Repair as necessary	
	Brake line restricted	Repair as necessary	
Snapping or clicking noise when brakes are applied	Drum brakes in 3 places–brake shoes binding at backing plate ledges	Lubricate	BR-28
	Drum brakes in 3 places–backing plate ledges worn	Replace and lubricate ledges	BR-28
	Drum brakes–loose or missing hold-down spring	Replace	BR-26
	Disc brakes–rust on front edge of inboard shoes	Inspect, lubricate, replace if necessary	BR-26
	Disc brakes–loose or missing anti-rattle spring	Replace	BR-14,20
	Disc brakes–loose installation bolt	Tighten	BR-14,20
	Disc brakes–wear on slide bushing	Replace	BR-14,20
Scraping or grinding noise when brakes are applied	Worn brake linings	Replace, Refinish rotors if heavily scored	BR-14,20
	Caliper to wheel or rotor interference	Replace as required	BR-14,20
	Dust cover to rotor interference	Correct or replace	BR-14,20
	Other brake system components: Warped or bent brake backing plate or splash shield, cracked rotors	Inspect or service	BR-14,20
	Tires rubbing against chassis and body	Inspect or service	

TROUBLESHOOTING (Cont'd)

Problem	Possible cause	Remedy	Page
Squealing, groaning or chattering noise when brakes are applied Note: Brake friction materials inherently generate noise and heat in order to dissipate energy. As a result, occasional squeal is normal and is aggravated by severe environmental conditions such as cold, heat, wetness, snow, salt, mud, etc. This occasional squeal is not a functional problem and does not indicate any loss of brake effectiveness	Rotors and pads worn or scored	Inspect, service or replace	BR-14,20
	Disc brakes–missing or damaged brake pad anti-squeal shim	Replace	BR-14,20
	Disc brakes–burred or rusted calipers	Clean or deburr	BR-16,22
	Dirty, greased, contaminated or glazed linings	Clean or replace	BR-14,20
	Improper lining parts	Inspect for correct usage, replace	BR-14,20
	Mal-adjustment of brake pedal or booster push-rod	Inspect and adjust	BR-6,12
	Loose or damaged shoe retaining pins, springs and clips and grooved backing plate ledges	Inspect, service or replace	BR-26
	Pad wear and pad wear indicator making contact with the rotor	Replace	BR-14,20
Squealing noise when brakes are not applied	Bent or warped backing plate causing interference with drum	Service or replace	BR-26
	Improper machining of drum causing interference with backing plate or shoe	Replace drum	BR-26
	Mal-adjustment of brake pedal or booster push-rod	Inspect and adjust	BR-6,12
	Poor return of brake booster or master cylinder	Inspect, service or replace	BR-9,12 14,20
	Disc brakes–rusted, stuck	Inspect, lubricate as necessary	BR-14,20
	Other brake system components: Loose or extra parts in brakes Rear drum adjustment too tight causing lining to glaze Worn, damaged or insufficiently lubricated wheel bearings	Inspect, service, replace as required	BR-26
	Drum brakes–weak, damaged or incorrect shoe hold-down springs		BR-26
	Drum brakes–grooved backing plate ledges		BR-26
	Improper positioning of pad in caliper		BR-14,20
	Outside diameter of rotor rubbing caliper housing		
	Housing installation of disc brake pad support plate		BR-14,20
	Pad wear and pad wear indicator making contact with the rotor		BR-14,20

TROUBLESHOOTING (Cont'd)

Problem	Possible cause	Remedy	Page
Groaning, clicking or rattling noise when brakes are not applied	Stones or foreign material trapped inside wheel covers	Remove stones, etc.	
	Loose wheel nuts	Tighten to correct torque. Replace if stud holes are elongated	
	Disc brakes–loose or missing anti-rattle spring or pad support plate or crimping on outer pad	Inspect, service or replace	BR-14,20
	Disc brakes–failure of shim	Inspect, replace if necessary	BR-14,20
	Disc brakes–wear on slide bushing	Inspect, replace if necessary	BR-14,20
	Disc brakes–loose installation bolt	Inspect, tighten if necessary	BR-14,20
	Mal-adjustment of break pedal or booster push-rod	Inspect and adjust	BR-6,12
	Disc brakes–poor return of piston	Inspect, service or replace	BR-16,22
	Drum brakes–loose or extra parts	Inspect, remove or service	BR-26
	Worn, damaged or dry wheel bearings	Inspect, lubricate or replace	

CHECKS AND ADJUSTMENTS

CHECK AND ADJUSTMENT OF BRAKE PEDAL

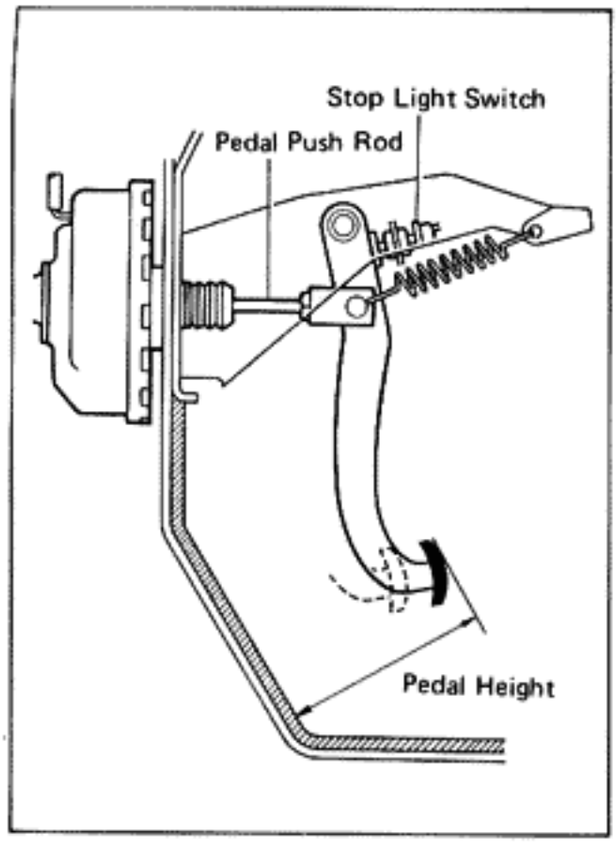

1. CHECK THAT PEDAL HEIGHT IS CORRECT, AS SHOWN

Pedal height from asphalt sheet: 154 – 164 mm (6.06 – 6.46 in.)

2. IF NECESSARY, ADJUST PEDAL HEIGHT

(a) Sufficiently loosen the stop light switch.

(b) Adjust the pedal height by turning the pedal push rod.

(c) Return the stop light switch until it lightly contacts the pedal stopper.

(d) After adjusting the pedal height, check and adjust the pedal freeplay.

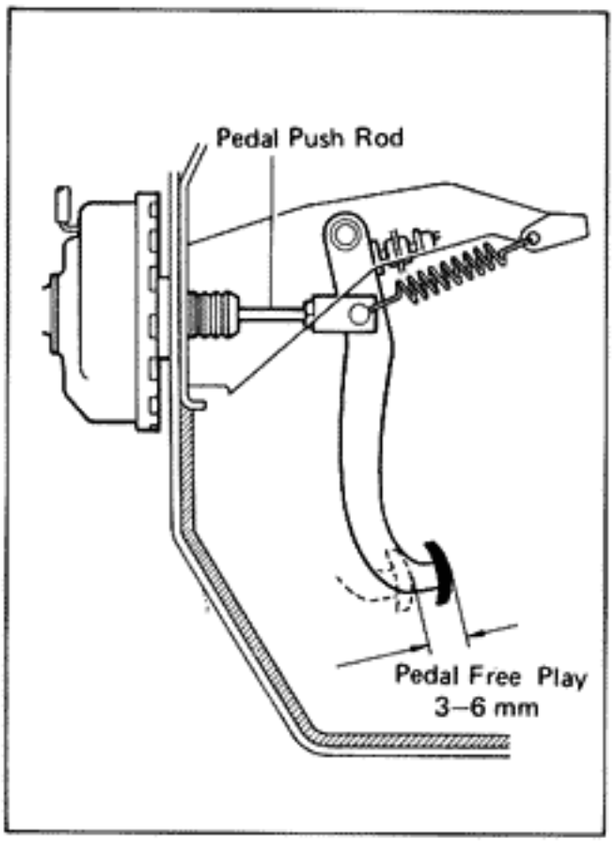

3. CHECK THAT PEDAL FREEPLAY IS CORRECT, AS SHOWN

(a) Stop the engine and depress the brake pedal several times until there is no more vacuum left in the booster.

(b) Push in the pedal until the beginning of resistance is felt. Measure the distance, as shown.

Pedal freeplay: 3 – 6 mm (0.12 – 0.24 in.)

NOTE: The pedal freeplay is the amount of the stroke until the booster air valve is moved by the pedal push rod.

4. IF NECESSARY, ADJUST PEDAL FREEPLAY

(a) If incorrect, adjust the pedal freeplay by turning the pedal push rod.

(b) Start the engine and confirm that pedal freeplay exists.

(c) After adjusting the pedal freeplay, check the pedal height.

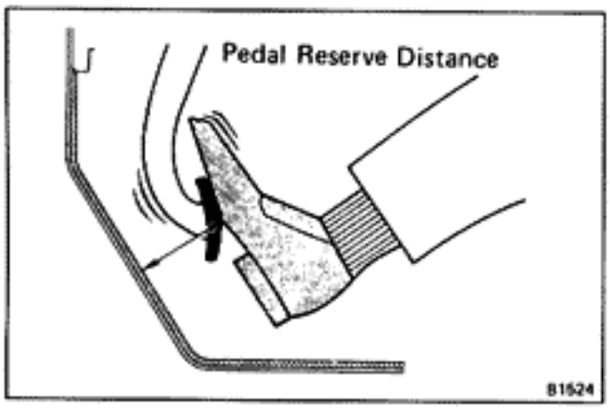

5. CHECK THAT PEDAL RESERVE DISTANCE IS CORRECT, AS SHOWN

Release the parking brake.
With engine running, depress the pedal and measure the pedal reserve distance, as shown.

Pedal reserve distance from asphalt sheet at 50 kg (110.2 lb, 490 N): More than 75 mm (2.95 in.)

If incorrect, troubleshoot the brake system.

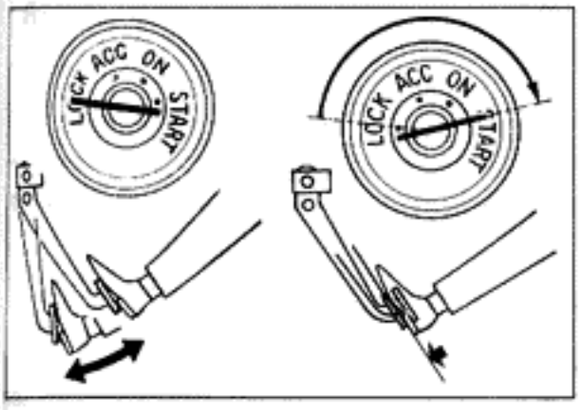

OPERATIONAL TEST OF BRAKE BOOSTER

NOTE: If available, use a brake booster tester to check the booster operating condition.

1. OPERATING CHECK

(a) Depress the brake pedal several times with the engine off, and check that there is no change in the pedal reserve distance.

(b) Depress the brake pedal and start the engine. If the pedal goes down slightly, operation is normal.

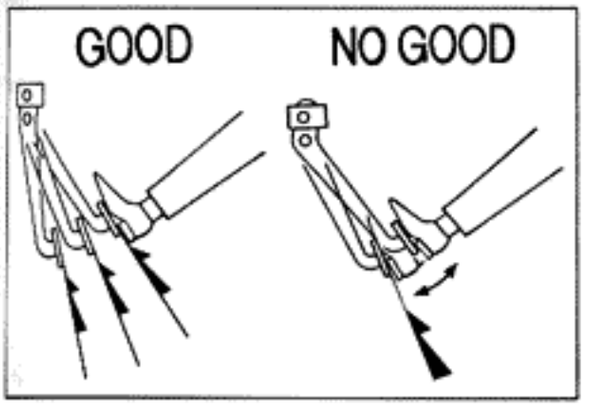

2. AIR TIGHTNESS

(a) Start the engine and stop it after one or two minutes. Depress the brake pedal several times slowly. If the pedal goes down furtherest the first time, but gradually rises after the second or third time, the booster is air tight.

(b) Depress the brake pedal while the engine is running, and stop it with the pedal depressed. If there is no change in pedal reserve travel after holding the pedal for thirty seconds, the booster is air tight.

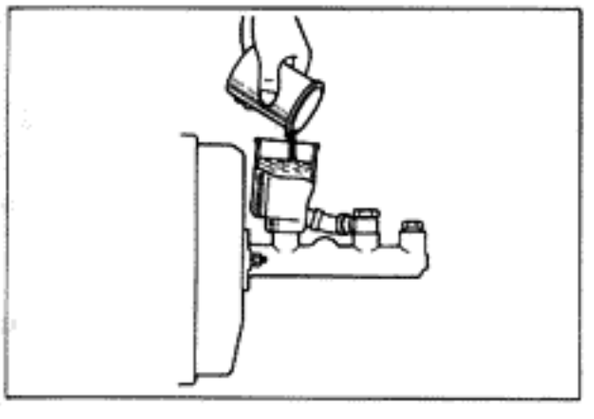

BLEEDING OF BRAKE SYSTEM

NOTE: If any work is done on the brake system or if air is suspected in the brake lines, bleed the system of air.

CAUTION: Do not let brake fluid remain on a painted surface. Wash it off immediately.

1. FILL BRAKE RESERVOIRS WITH BRAKE FLUID

Check the reservoir after bleeding each wheel. Add fluid, if necessary.

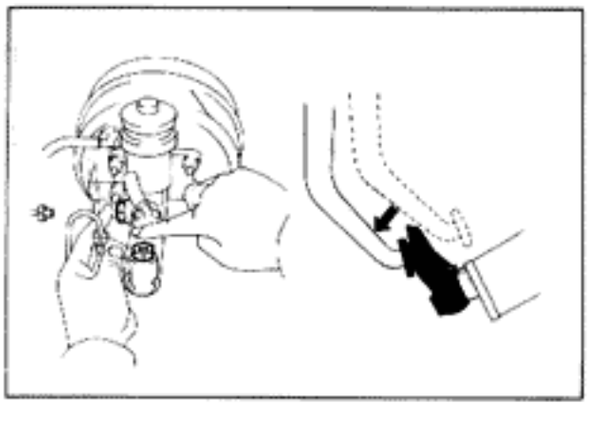

2. BLEED MASTER CYLINDER

NOTE: If the master cylinder was disassembled or if the reservoir tank becomes empty, bleed the air from the master cylinder.

(a) Disconnect the brake tubes from the master cylinder.

(b) Depress the brake pedal and hold it.

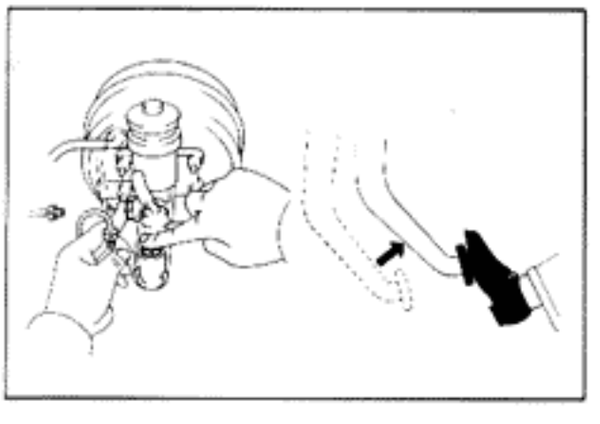

(c) Block off the outlet plug with your finger, and release the brake pedal.

(d) Repeat (b) and (c) three or four times.

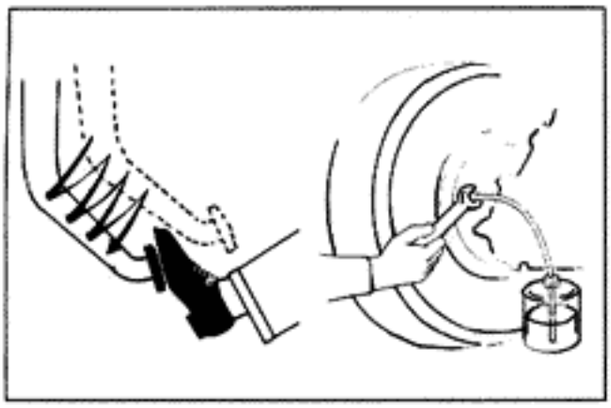

3. **BEGIN BLEEDING AIR FROM BRAKE CYLINDER WITH LONGEST HYDRAULIC LINE**

4. **CONNECT VINYL TUBE TO BRAKE CYLINDER BLEEDER PLUG**

   Insert other end of the tube in a half-full container of brake fluid.

5. **BLEED BRAKE LINE**

   (a) Slowly pump the brake pedal several times.

   (b) While having an assistant press on the pedal, loosen the bleeder plug until fluid starts to runout. Then close the bleeder plug.

   (c) Repeat this procedure until there are no more air bubbles in the fluid.

   Bleeder plug tightening torque:
   85 kg-cm (74 in.-lb, 8.3 N·m)

6. **REPEAT PROCEDURE FOR EACH WHEEL**

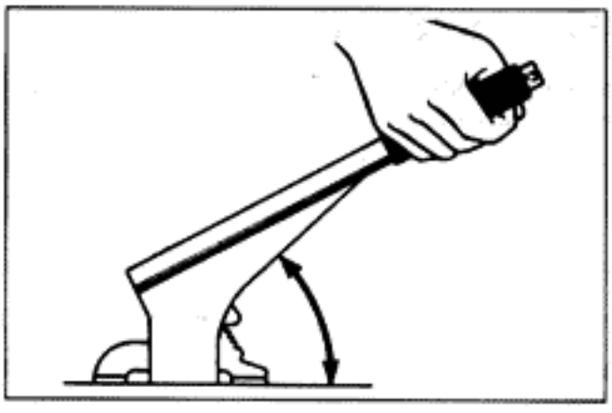

CHECK AND ADJUSTMENT OF PARKING BRAKE

1. **CHECK THAT PARKING BRAKE LEVER TRAVEL IS CORRECT**

   Pull the parking brake lever all the way up, and count the notches of lever travel.

   Parking brake lever travel at 20 kg (44.1 lb, 196 N):
   5 — 8 clicks

   If incorrect, adjust the parking brake.

2. **IF NECESSARY, ADJUST PARKING BRAKE**

   NOTE: Before adjusting the parking brake, make sure that the rear brake shoe clearance has been adjusted.

   For shoe clearance adjustment, see step 10 on page BR-30.

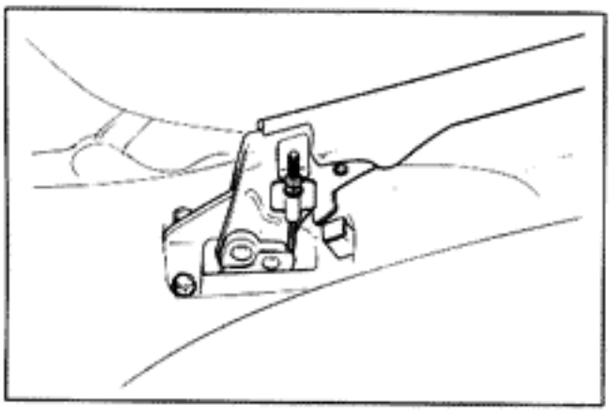

(a) Remove the rear console box.

(b) Loosen the lock nut and turn the adjusting screw until the travel is correct.

(c) Tighten the lock nut and install the console box.

MASTER CYLINDER

COMPONENTS

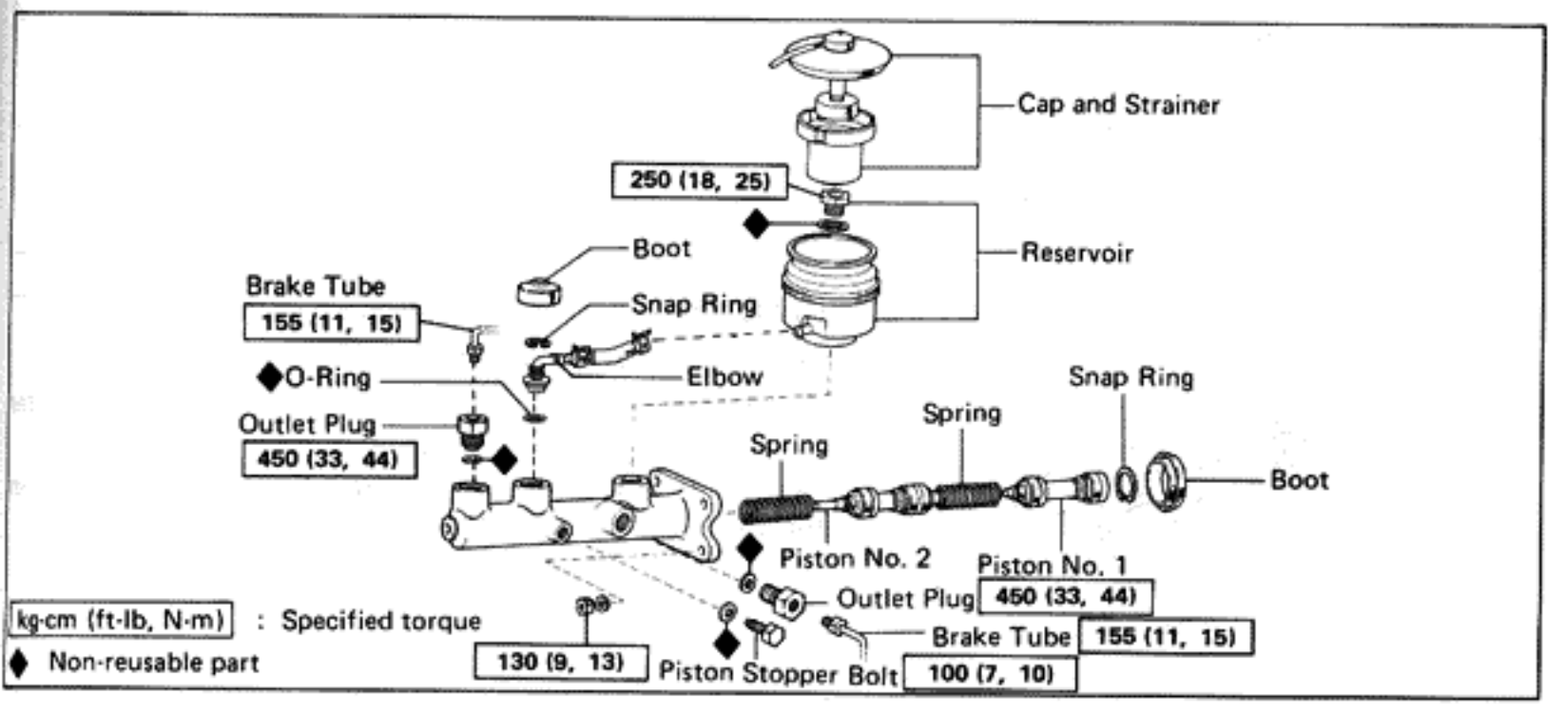

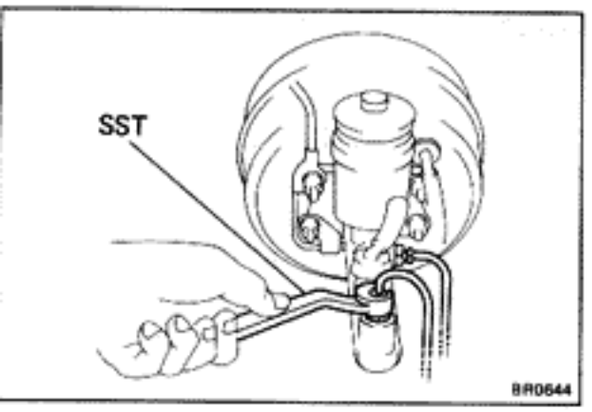

REMOVAL OF MASTER CYLINDER

CAUTION: Do not let brake fluid remain on a painted surface. Wash it off immediately.

1. **DISCONNECT LEVEL WARNING SWITCH CONNECTOR**
2. **DISCONNECT TWO BRAKE TUBES**

   Using SST, disconnect two brake tubes from the master cylinder.

   SST 09751-36011
3. **REMOVE MASTER CYLINDER**
   (a) Remove the four nuts.
   (b) Remove the master cylinder and gasket from the brake booster.

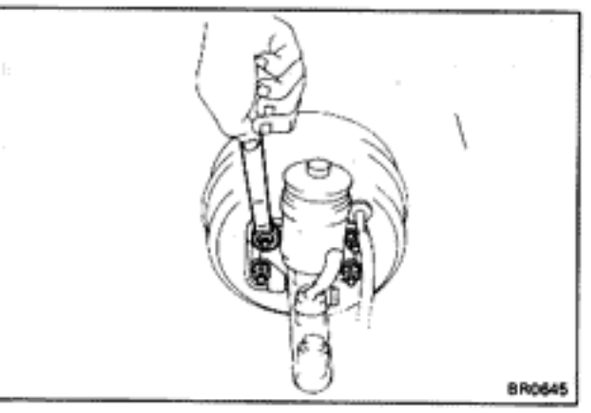

DISASSEMBLY OF MASTER CYLINDER

1. **PLACE CYLINDER IN VISE**
2. **DISCONNECT RESERVOIR AND HOSE**

   Remove the cap, strainer, bolt and hose.
3. **REMOVE SNAP RING AND ELBOW**
4. **REMOVE TWO OUTLET PLUGS**

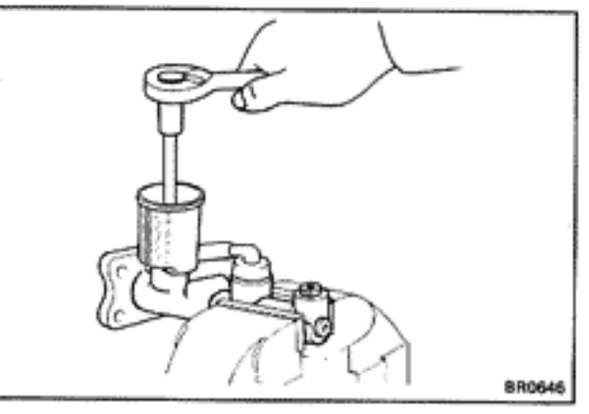

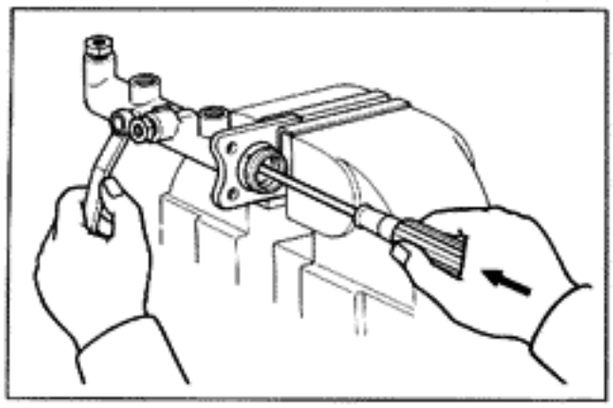

5. REMOVE PISTON STOPPER BOLT

Using a screwdriver, push the pistons in all the way and remove the piston stopper bolt.

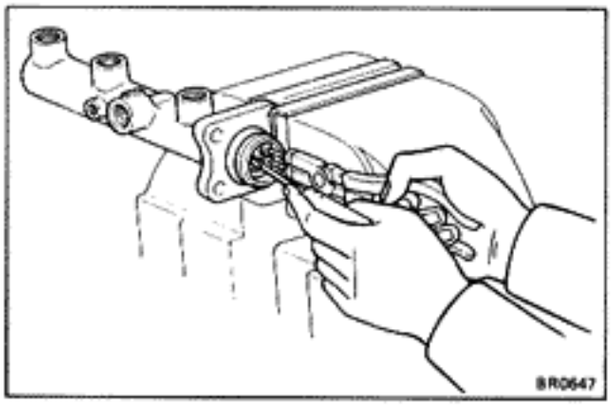

6. REMOVE TWO PISTONS AND SPRINGS

(a) Using snap ring pliers, remove the snap ring.

(b) Remove two pistons and springs from the master cylinder.

NOTE: It may be necessary to inject compressed air in the check valve hole to force out the No. 2 piston.

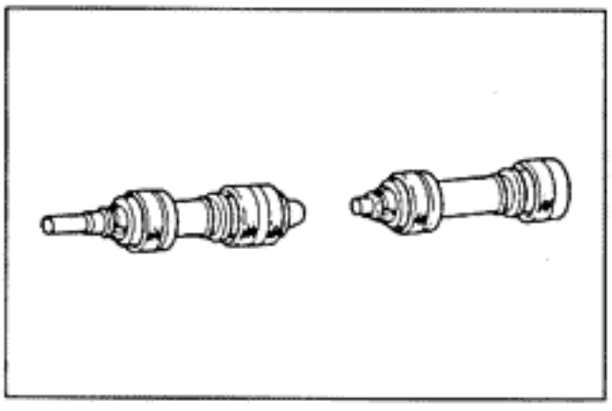

ASSEMBLY OF MASTER CYLINDER

(See page BR-9)

1. APPLY LITHIUM SOAP BASE GLYCOL GREASE TO RUBBER PARTS OF PISTON

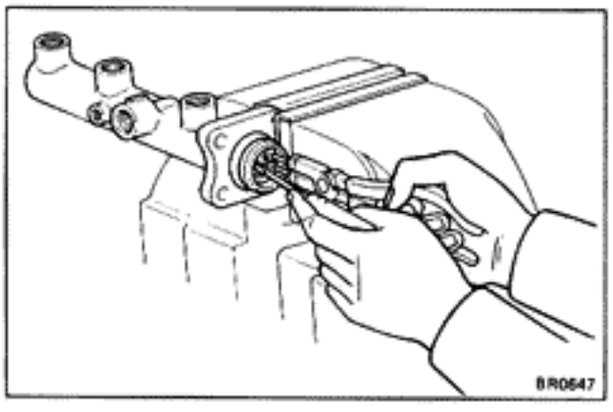

2. INSTALL TWO SPRINGS AND PISTONS

CAUTION: Be careful not to damage the rubber lips on the pistons.

(a) Insert two springs and pistons in the master cylinder housing as shown.

(b) Using snap ring pliers, install the snap ring.

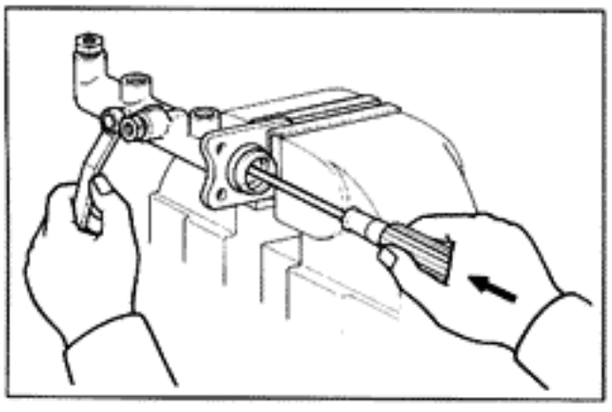

3. INSTALL PISTON STOPPER BOLT

Using screwdriver, push the pistons in all the way and install the piston stopper bolt. Torque the bolt.

Torque: 100 kg-cm (7 ft-lb, 10 N·m)

4. INSTALL TWO OUTLET PLUGS

Torque plugs.

Torque: 450 kg-cm (33 ft-lb, 44 N·m)

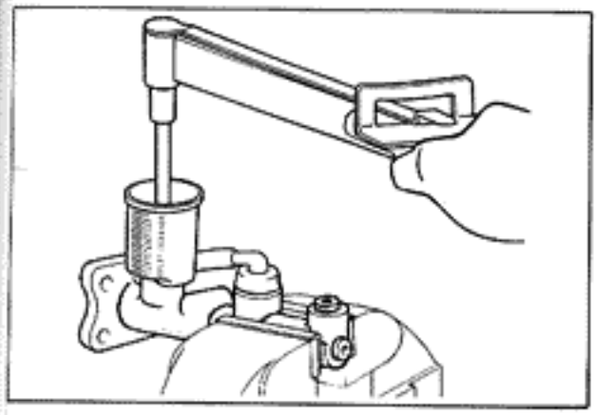

5. INSTALL RESERVOIR
   (a) Install the reservoir on the master cylinder. Torque the bolt.
   Torque: 250 kg-cm (18 ft-lb, 25 N-m)
   (b) Install the strainer and cap.
6. INSTALL ELBOW AND SNAP RING
7. CONNECT RESERVOIR HOSE

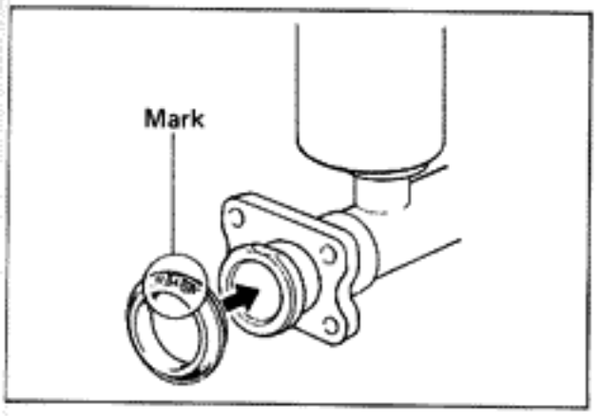

INSTALLATION OF MASTER CYLINDER

(See page BR-9)

1. CLEAN OUT GROOVE ON LOWER INSTALLATION SURFACE OF MASTER CYLINDER
2. CONFIRM THAT "UP" MARK OF MASTER CYLINDER BOOT IS IN CORRECT POSITION

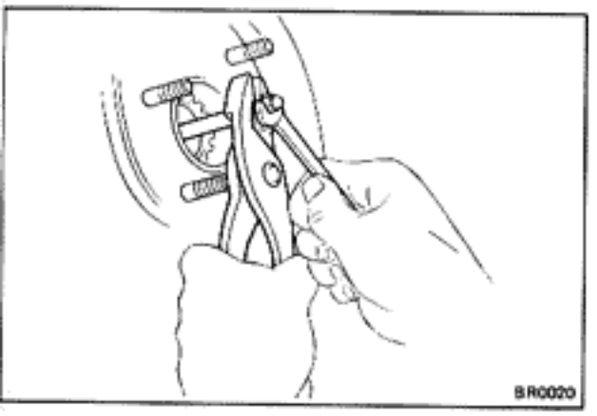

3. ADJUST LENGTH OF BRAKE BOOSTER PUSH ROD BEFORE INSTALLING MASTER CYLINDER
   (See page BR-12)
4. INSTALL MASTER CYLINDER
   Install the master cylinder and gasket on the brake booster with four nuts.
   Torque: 130 kg-cm (9 ft-lb, 13 N-m)

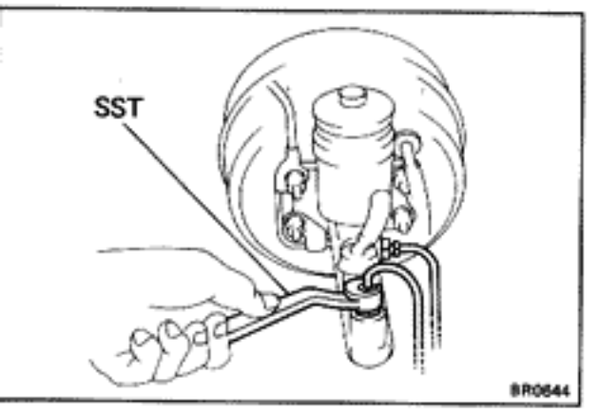

5. CONNECT TWO BRAKE TUBES
   Using SST, connect two brake tubes to the outlet plugs.
   SST 09751-36011
   Torque: 155 kg-cm (11 ft-lb, 15 N-m)
6. CONNECT LEVEL WARNING SWITCH CONNECTOR

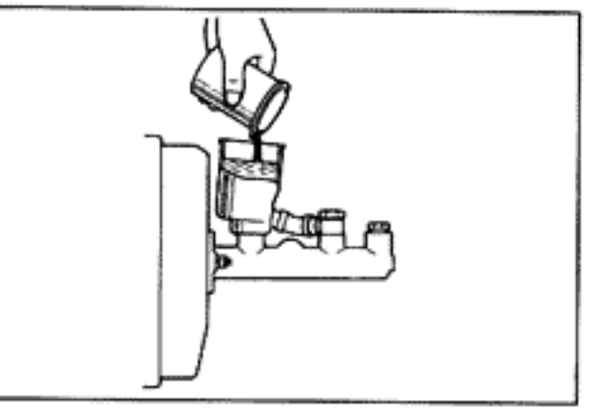

7. ADJUST BRAKE PEDAL (See page BR-6)
8. FILL BRAKE RESERVOIR WITH BRAKE FLUID AND BLEED BRAKE SYSTEM (See page BR-7)

BRAKE BOOSTER

REMOVAL OF BRAKE BOOSTER

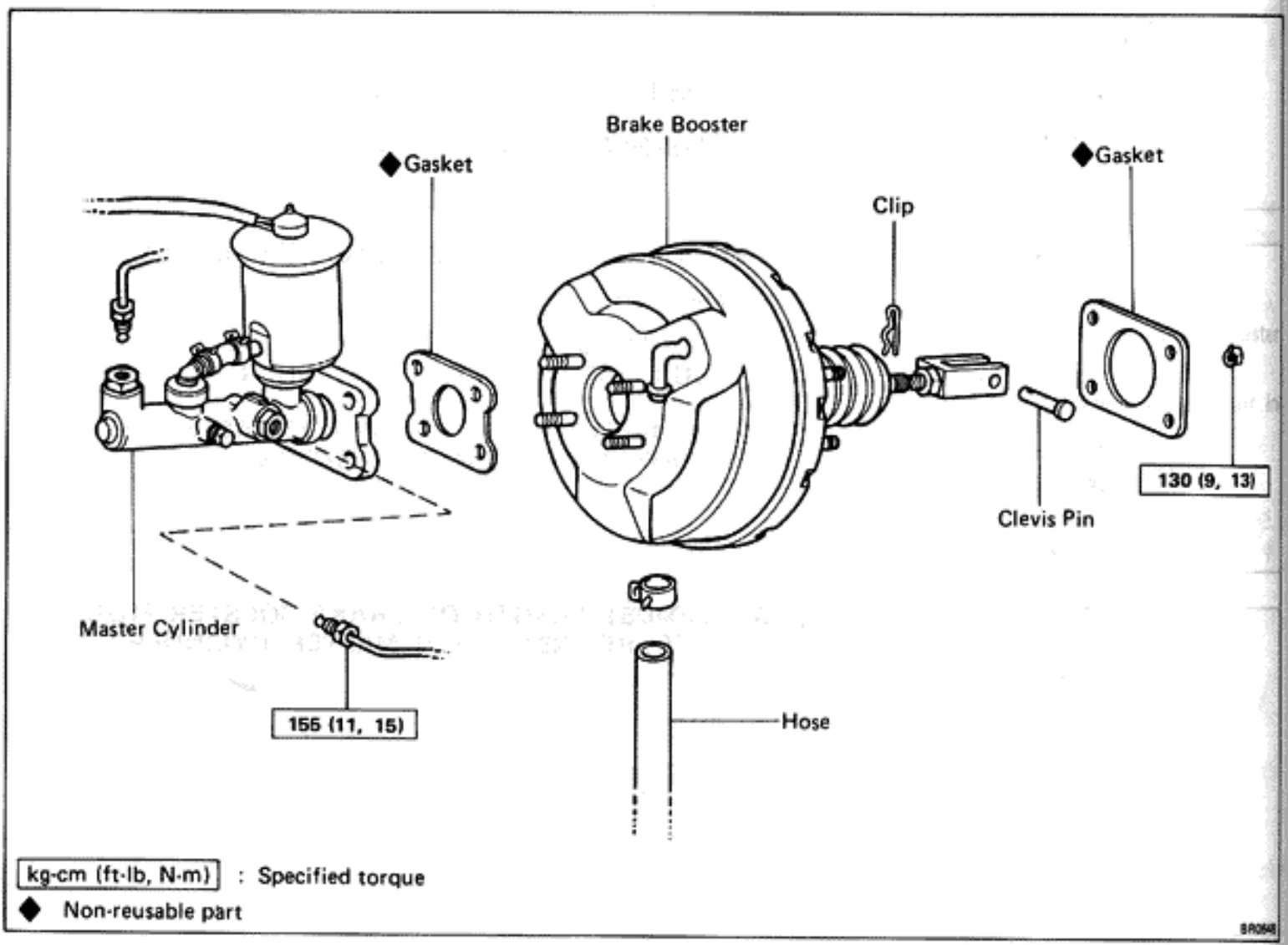

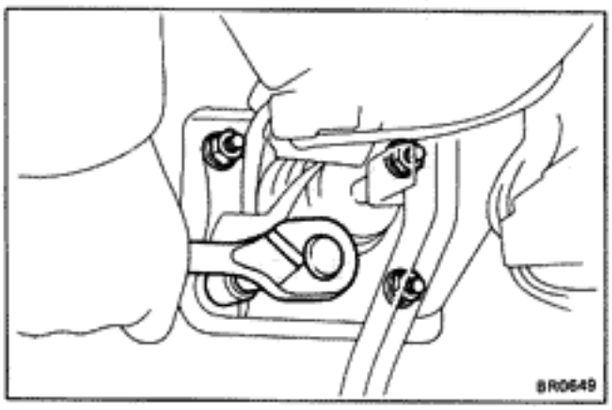

1. **REMOVE MASTER CYLINDER** (See page BR-9)
2. **REMOVE CLEVIS PIN FROM BRAKE PEDAL**
   Remove the clip and clevis pin.
3. **DISCONNECT HOSE FROM BRAKE BOOSTER**
4. **REMOVE BRAKE BOOSTER**
   Remove the four nuts, and pull out the brake booster.

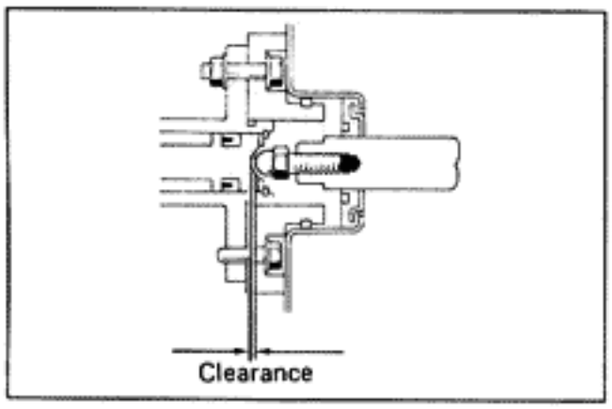

INSTALLATION OF BRAKE BOOSTER

1. **ADJUST LENGTH OF BOOSTER PUSH ROD**
   Adjust the length of the booster push rod to provide the specified clearance between the push rod and the master cylinder piston.

   Standard clearance: 0.1 – 0.5 mm (0.004 – 0.020 in.)

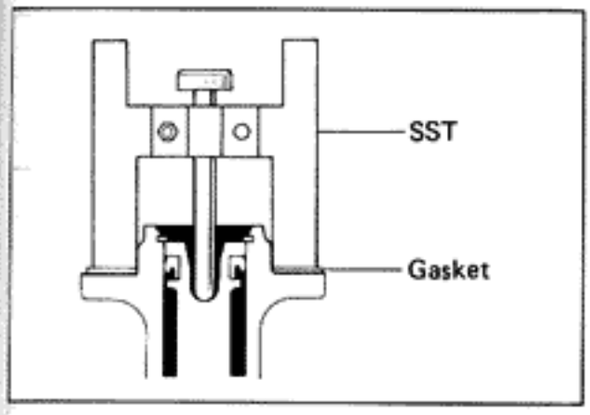

(a) Set SST on the master cylinder, and lower the pin until its tip slightly touches the piston.

SST 09737-00010

NOTE: Take the measurement with the gasket in place.

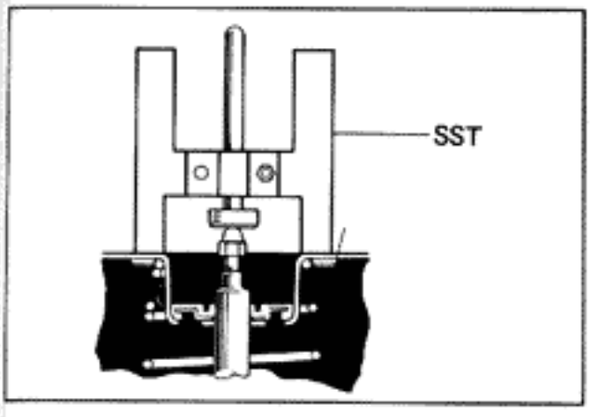

(b) Turn SST upside down, and set it on the booster.

SST 09737-00010

(c) Check that push rod lightly touches the pin head.

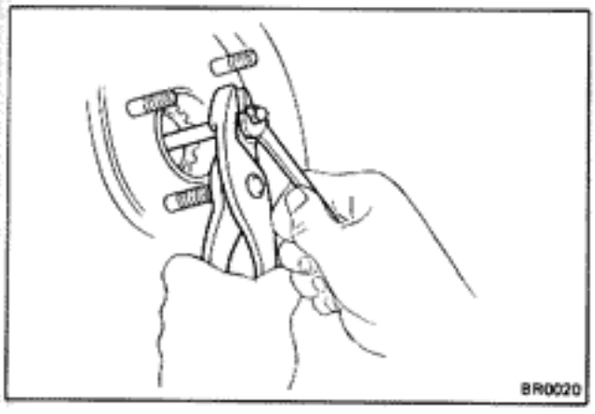

(d) Adjust the booster push rod length until the push rod lightly touches the pin head.

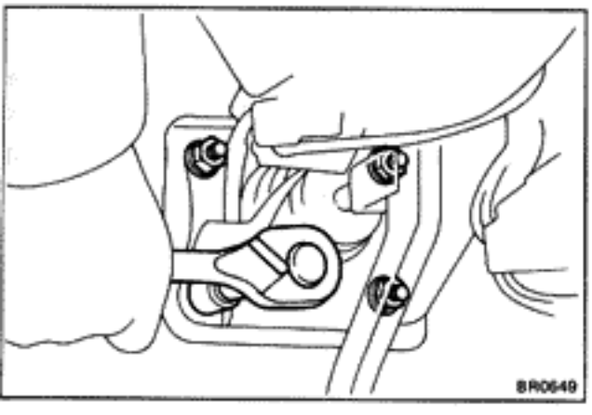

2. **INSTALL BRAKE BOOSTER**
   (a) Install the brake booster over the gasket.
   (b) Tighten the four nuts.
   Torque: 130 kg-cm (9 ft-lb, 13 N-m)

3. **CONNECT CLEVIS TO BRAKE PEDAL**
   Install the clevis pin and clip.

4. **INSTALL MASTER CYLINDER**
   (See steps 1, 2 and 4 on page BR-11)

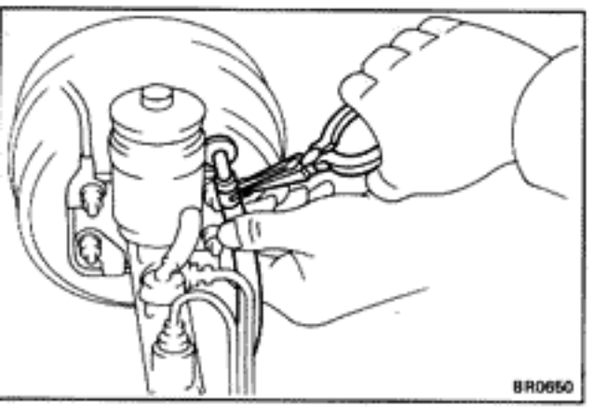

5. **CONNECT HOSE TO BRAKE BOOSTER**

6. **ADJUST BRAKE PEDAL (See page BR-6)**

7. **PERFORM OPERATIONAL CHECK**
   (See page BR-7)

FRONT BRAKE

COMPONENTS

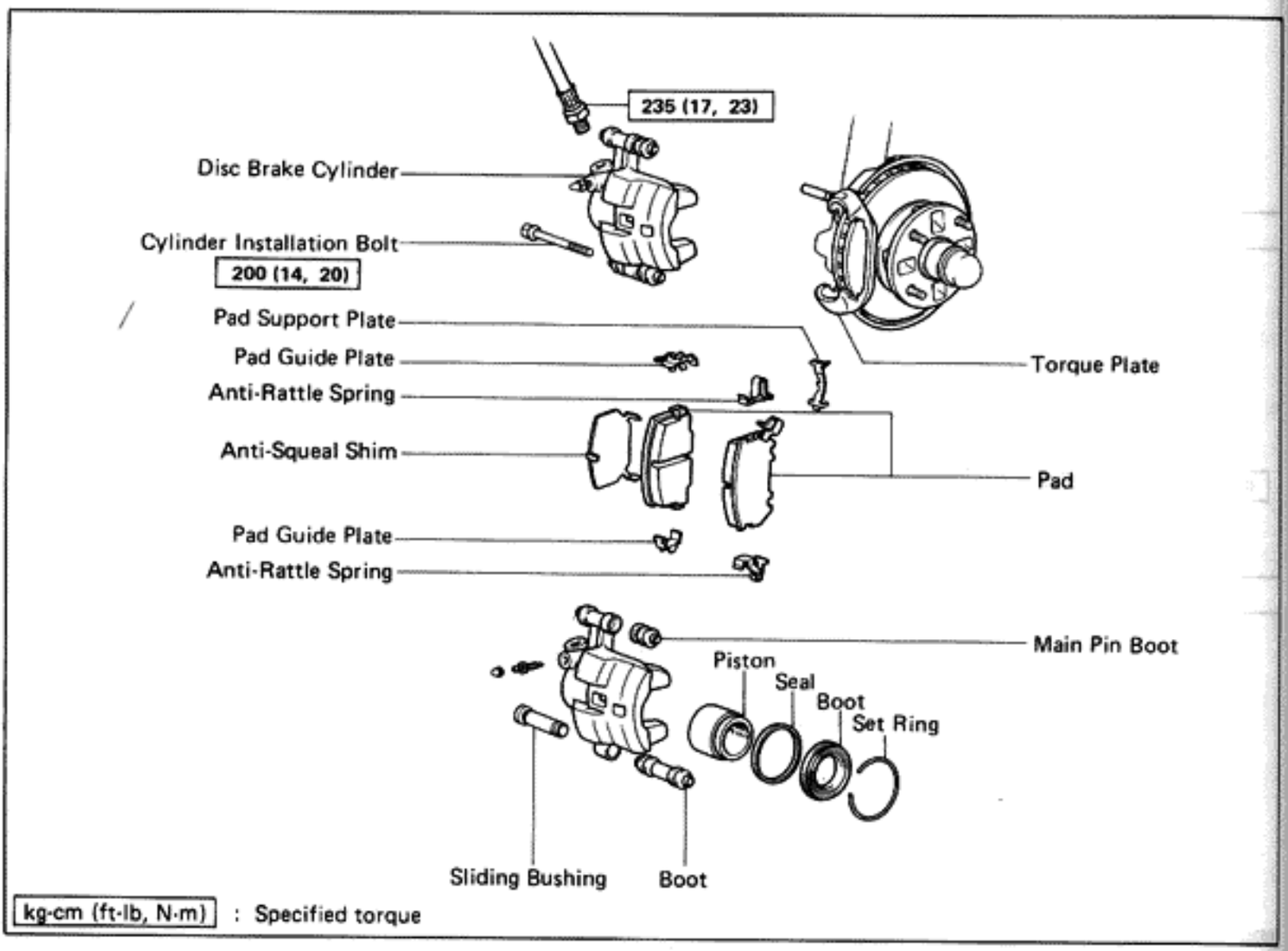

kg-cm (ft-lb, N·m) : Specified torque

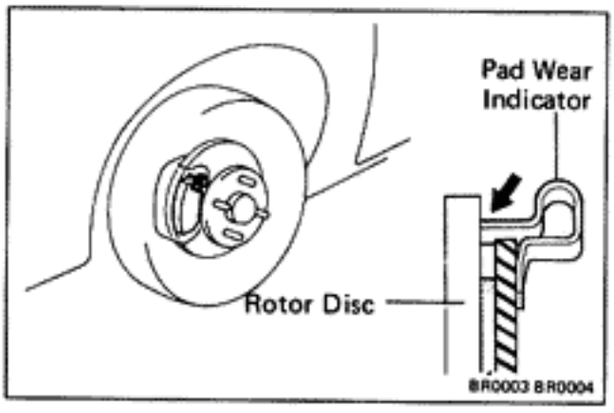

REPLACEMENT OF BRAKE PADS

NOTE: If a squealing noise occurs from the brakes while driving, check the pad wear indicator. If there are traces of the indicator contacting the rotor disc, the disc pad should be replaced.

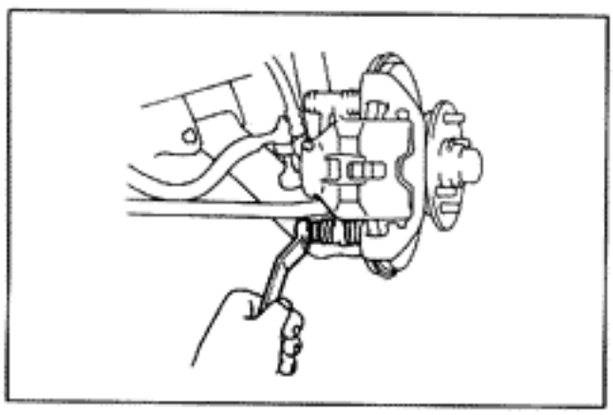

1. DRAW OUT A SMALL AMOUNT OF BRAKE FLUID
2. REMOVE CYLINDER INSTALLATION BOLT

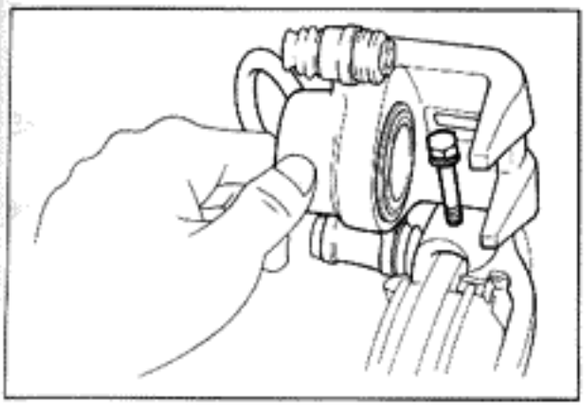

3. **LIFT UP CYLINDER**
   (a) Lift up the cylinder.
   (b) Insert a bolt into the torque plate hole to secure the cylinder.

4. **REMOVE PADS AND ANTI-SQUEAL SHIM**

5. **REMOVE ANTI-RATTLE SPRINGS, PAD GUIDE PLATES AND SUPPORT PLATE**

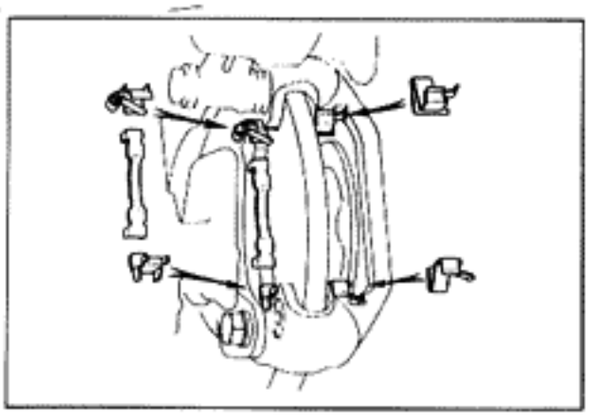

6. **INSTALL NEW PAD SUPPORT PLATE, NEW PAD GUIDE PLATES AND NEW ANTI-RATTLE SPRINGS**

7. **PUSH PISTON INTO CYLINDER**

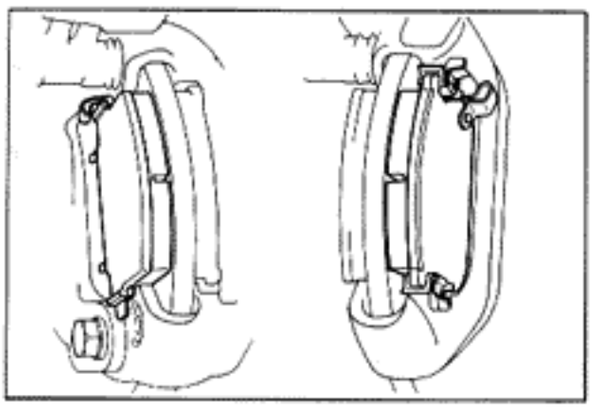

8. **INSTALL NEW PADS AND NEW ANTI-SQUEAL SHIM**
   (a) Install the pads onto each spring.

   NOTE: Install the outside pad so the wear indicator is at the top side.

   CAUTION: Do not allow oil or grease to touch the rubbing face.

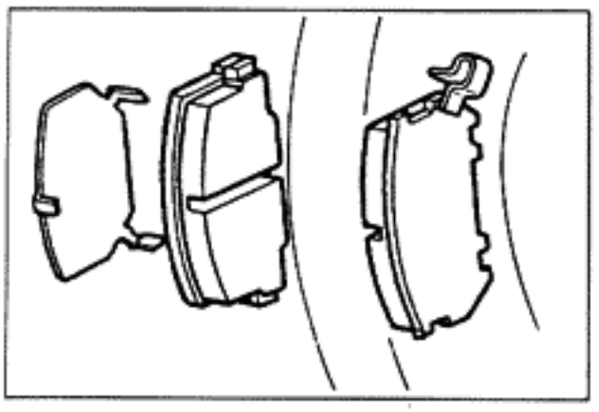

   (b) Install the anti-squeal shim toward the inside of the pad.

9. **LOWER CYLINDER**

   Remove the bolt from the torque plate and lower the cylinder.

   NOTE: Insert the cylinder carefully so the boot is not wedged.

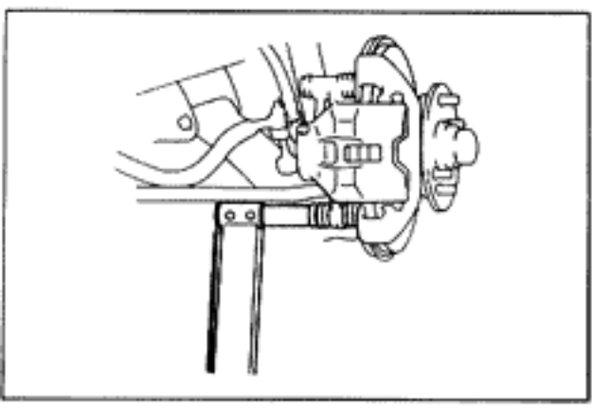

10. **INSTALL CYLINDER INSTALLATION BOLT**

    Install and torque the cylinder installation bolt.

    Torque: 200 kg-cm (14 ft-lb, 20 N·m)

11. **FILL BRAKE FLUID**

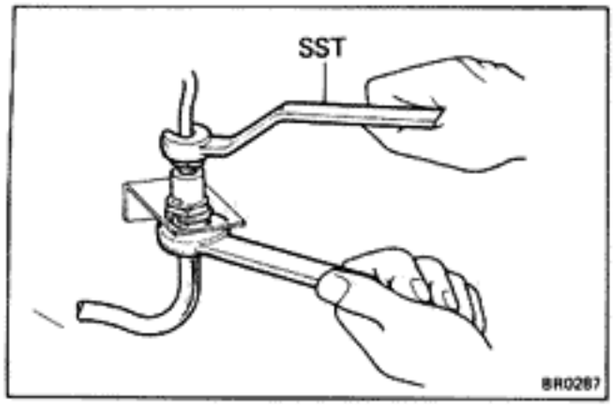

REMOVAL OF CYLINDER

(See page BR-14)

1. DISCONNECT BRAKE HOSE FROM BRAKE TUBE AND CYLINDER
   (a) Using SST and a spanner, disconnect the brake tube from the hose.

   SST 09751-36011

   (b) Use a container to catch the brake fluid.

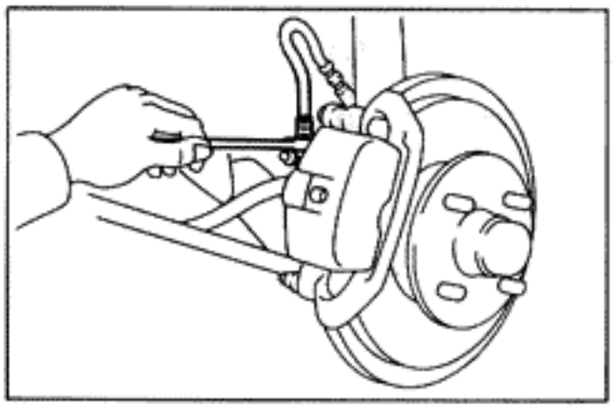

   (c) Remove the clip from brake hose.
   (d) Disconnect the brake hose from the cylinder.

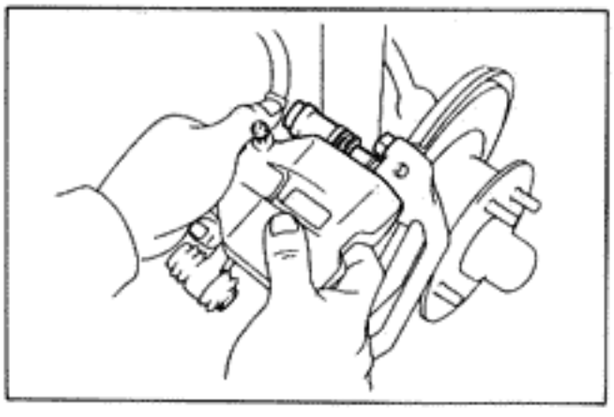

2. REMOVE CYLINDER
   (a) Hold the sliding bushing and remove the cylinder installation bolt.
   (b) Lift up and push out the cylinder from the torque plate pin.

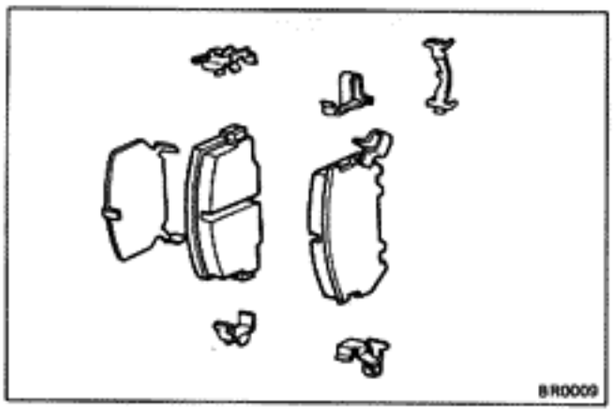

3. REMOVE FOLLOWING PARTS:
   (a) Anti-squeal shim
   (b) Brake pads
   (c) Anti-rattle springs
   (d) Pad guide plates
   (e) Pad support plate

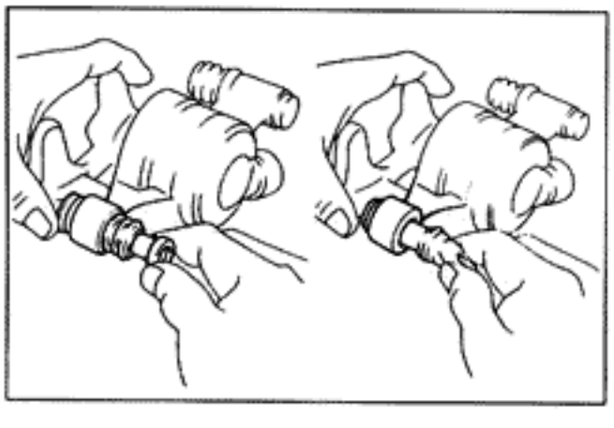

DISASSEMBLY OF CYLINDER

(See page BR-14)

1. REMOVE SLIDING BUSHING AND BOOT

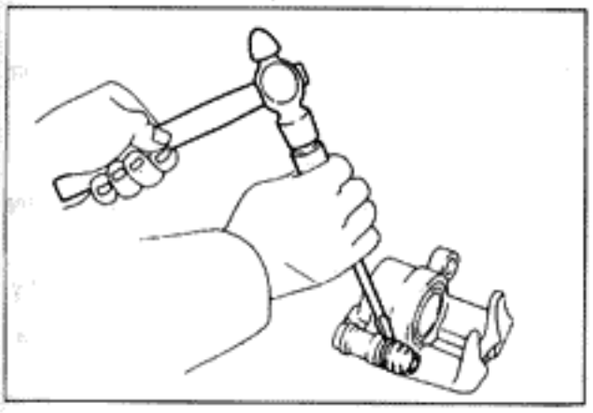

2. REMOVE MAIN PIN BOOT WITH A CHISEL

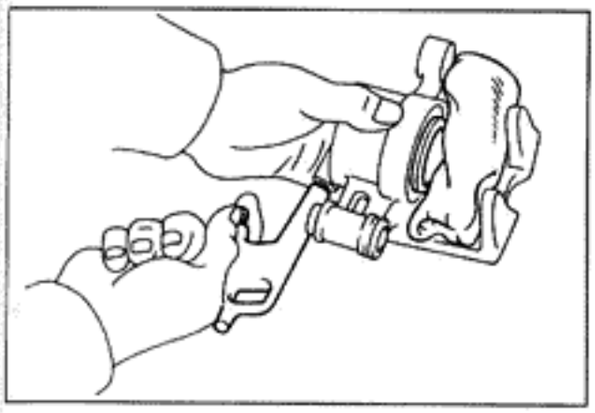

3. REMOVE PISTON FROM CYLINDER

Use compressed air to remove the piston from the cylinder.

WARNING: Do not place your fingers in front of the piston when using compressed air.

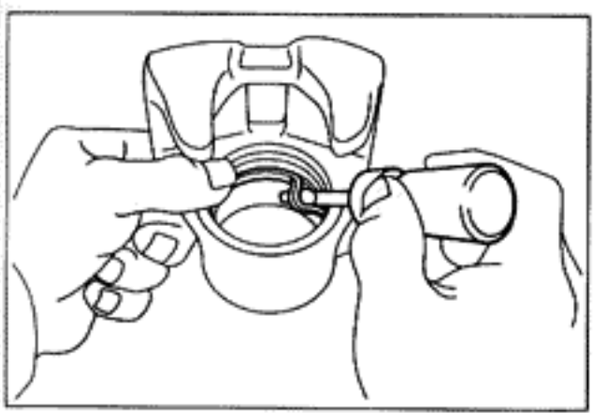

4. REMOVE CYLINDER BOOT AND SET RING FROM CYLINDER

5. REMOVE PISTON SEAL FROM CYLINDER

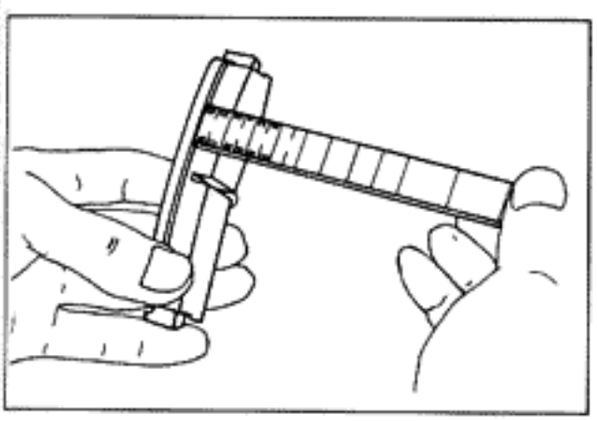

INSPECTION OF FRONT BRAKE COMPONENTS

1. MEASURE PAD LINING THICKNESS

Standard thickness: 10.5 mm (0.413 in.)
Minimum thickness: 3.0 mm (0.118 in.)

Replace the pad if the thickness is less than the minimum (the 1.0 mm slit is no longer visible) or if it shows sign of uneven wear.

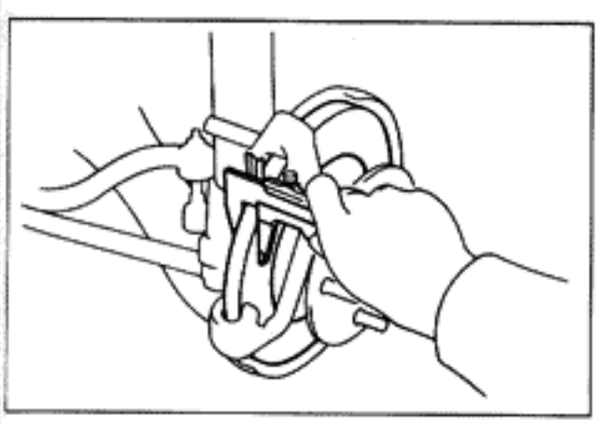

2. MEASURE ROTOR DISC THICKNESS

Standard thickness: 20.0 mm (0.787 in.)
Minimum thickness: 19.0 mm (0.748 in.)

If the disc thickness is less than minimum, replace the disc.

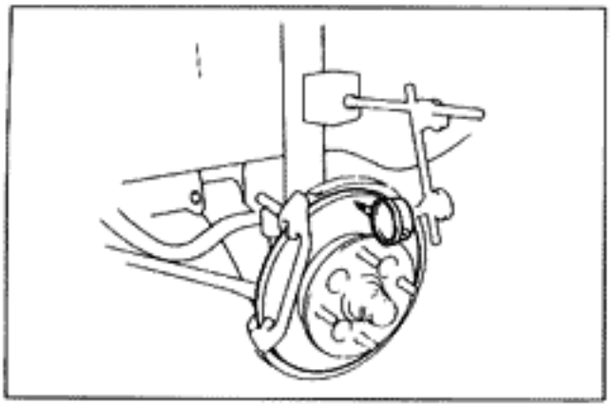

3. MEASURE ROTOR DISC RUNOUT

Measure the rotor disc runout at 10 mm (0.39 in.) from the outer edge of rotor disc.

Maximum disc runout: 0.15 mm (0.0059 in.)

If the runout is greater than the maximum, replace the disc.

NOTE: Make sure the front bearing is adjusted correctly.

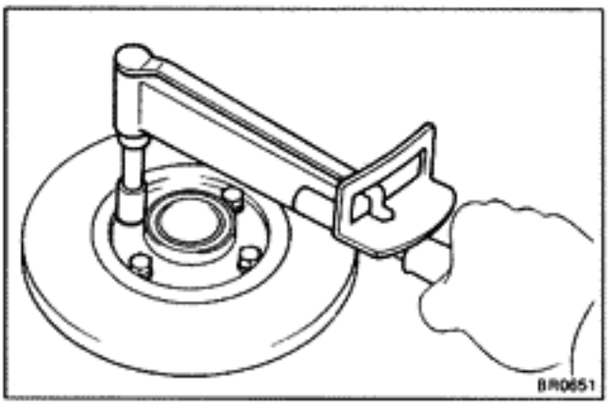

4. IF NECESSARY, REPLACE ROTOR DISC

(a) Remove the torque plate from the knuckle.

(b) Remove the axle hub. (See page FA-6)

(c) Remove the disc from the axle hub.

(d) Install a new rotor disc. Torque four bolts.

Torque: 650 kg-cm (47 ft-lb, 64 N-m)

(e) Install the axle hub and adjust the front bearing preload. (See page FA-8)

(f) Install the torque plate onto the knuckle.

Torque: 925 kg-cm (67 ft-lb, 91 N-m)

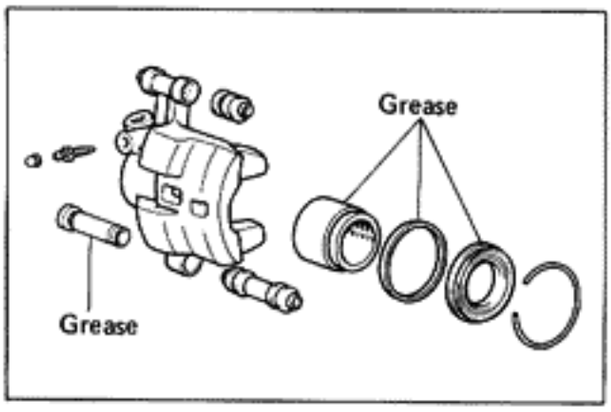

ASSEMBLY OF CYLINDER

(See page BR-14)

1. APPLY LITHIUM SOAP BASE GLYCOL GREASE TO FOLLOWING PARTS:

(a) Main pin boot

(b) Sliding pin and boot

(c) Piston seal and piston

(d) Dust boot

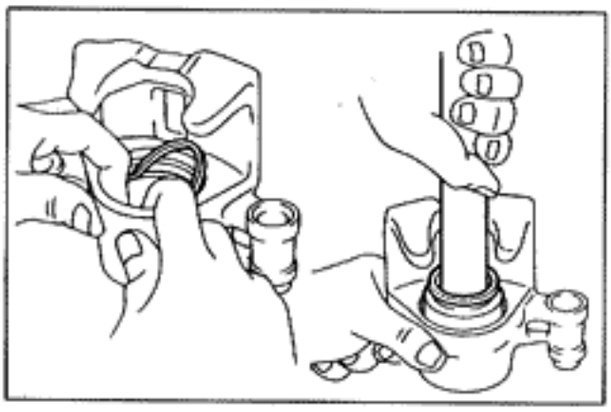

2. INSTALL PISTON SEAL AND PISTON IN CYLINDER

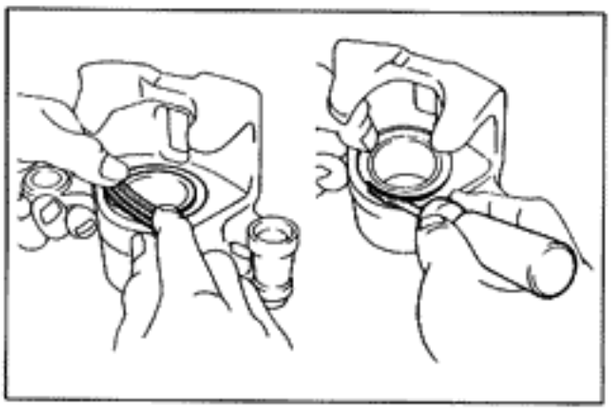

3. INSTALL CYLINDER BOOT AND SET RING IN CYLINDER

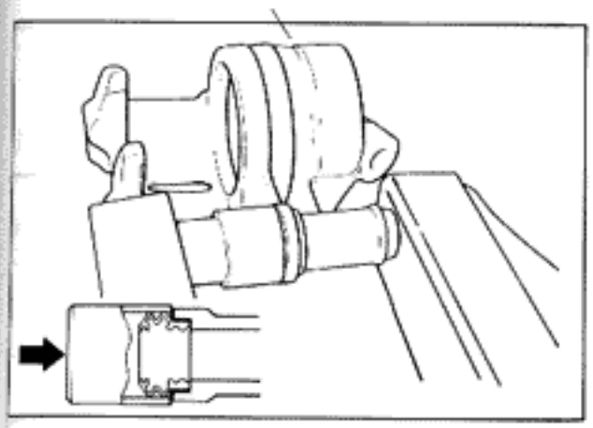

4. INSTALL MAIN PIN BOOT

Using a 21-mm socket wrench, press in the boot.

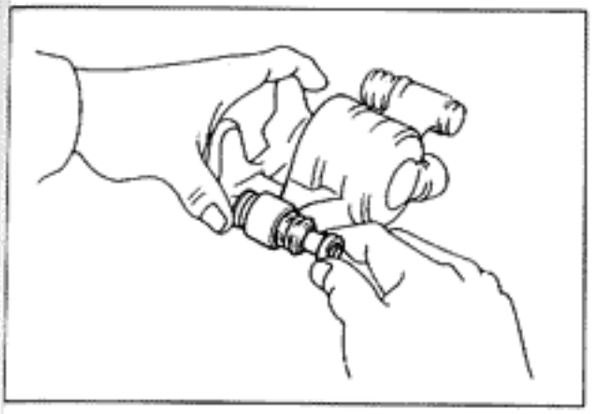

5. INSTALL DUST BOOT AND SLIDING BUSHING

(a) Install the dust boot.

NOTE: Be careful that the seal does not fold under.

(b) Install the bushing into the boot facing the flange toward the inside.

INSTALLATION OF CYLINDER

(See page BR-14)

SEE
FRONT BRAKE
REPLACEMENT OF BRAKE PADS
BR-14

1. INSTALL FOLLOWING PARTS:

(a) Pad support plate

(b) Pad guide plates

(c) Anti-rattle springs

(d) Brake pads

(e) Anti-squeal shim

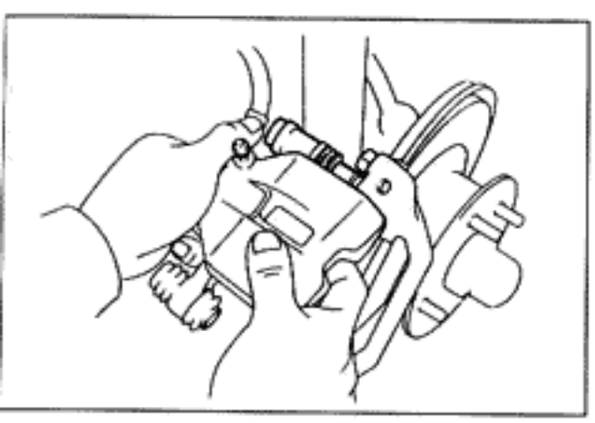

2. INSTALL CYLINDER

(a) Install the cylinder onto the main pin.

NOTE: Make sure that the boot end is installed into the groove of the main pin.

(b) Install the cylinder over the brake pads.

3. INSTALL CYLINDER INSTALLATION BOLTS

Install the cylinder installation bolts, torque one bolt.

Torque: 200 kg-cm (14 ft-lb, 20 N·m)

NOTE: Insert the installation bolt into the cylinder carefully so as not to wedge the boot.

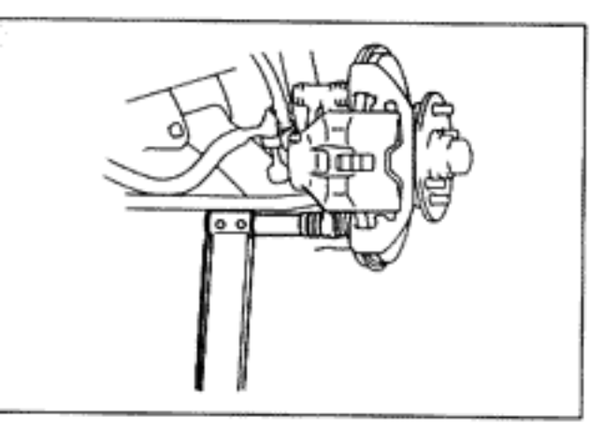

4. CONNECT BRAKE LINE

(a) Connect the brake hose to the cylinder.

Torque: 235 kg-cm (17 ft-lb, 23 N·m)

(b) Using SST, connect brake hose to the brake tube.

SST 09751-36011

Torque: 155 kg-cm (11 ft-lb, 15 N·m)

5. FILL BRAKE RESERVOIR WITH BRAKE FLUID AND BLEED BRAKE SYSTEM (See page BR-7)

REAR BRAKE

COMPONENTS

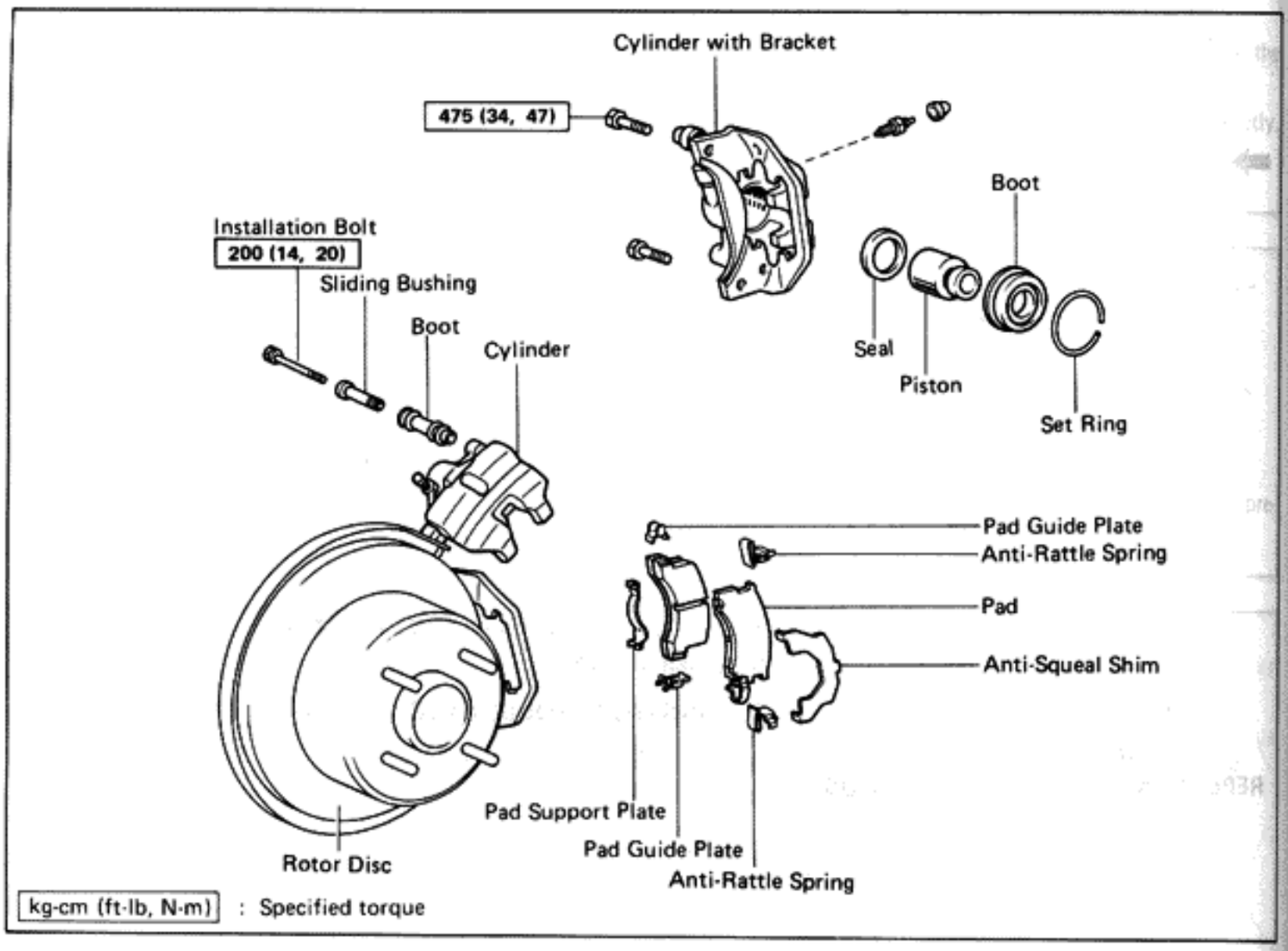

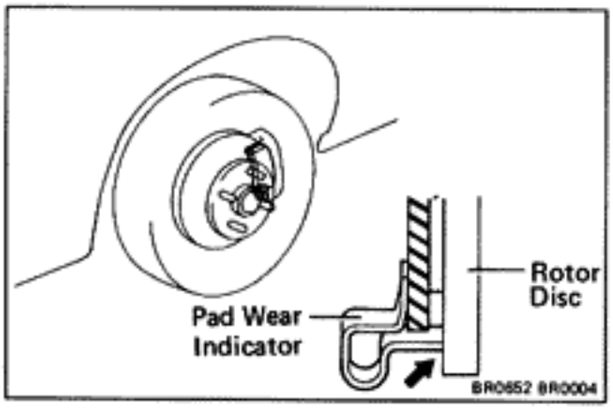

REPLACEMENT OF BRAKE PADS

NOTE: If a squealing noise occurs from the brakes while driving, check the pad wear indicator. If there are traces of the indicator contacting the rotor disc, the disc pad should be replaced.

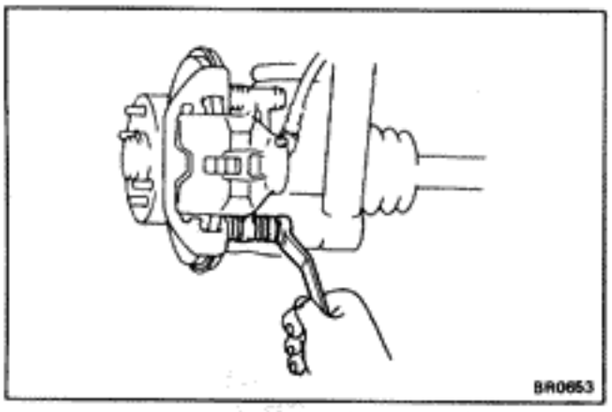

1. DRAW OUT A SMALL AMOUNT OF BRAKE FLUID
2. UNSCREW CYLINDER INSTALLATION BOLT

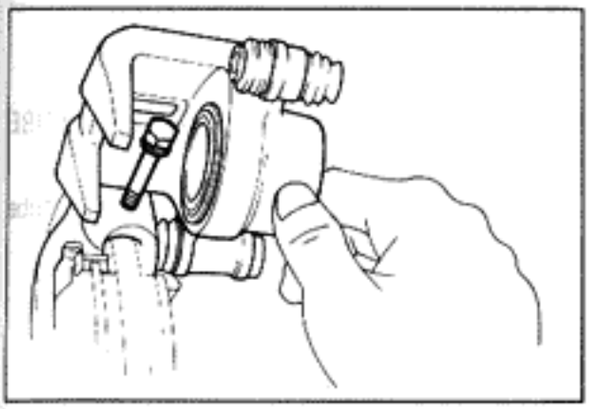

3. **LIFT UP CYLINDER**
   (a) Lift up the cylinder.
   (b) Insert a bolt into the torque plate hole to secure the cylinder.

4. **REMOVE PADS AND ANTI-SQUEAL SHIM**

5. **REMOVE ANTI-RATTLE SPRINGS, PAD GUIDE PLATES AND SUPPORT PLATE**

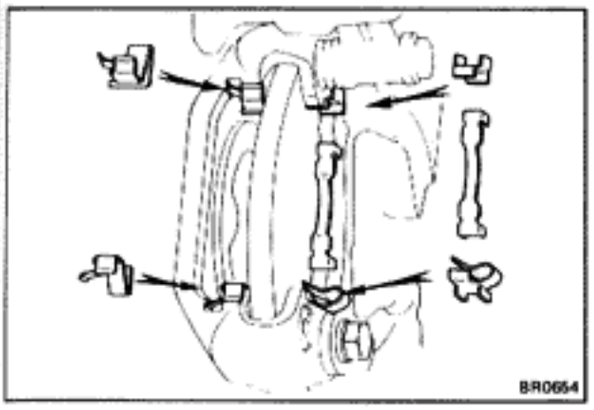

6. **INSTALL NEW PAD SUPPORT PLATE, NEW PAD GUIDE PLATES AND NEW ANTI-RATTLE SPRINGS**

7. **PUSH PISTON INTO CYLINDER**

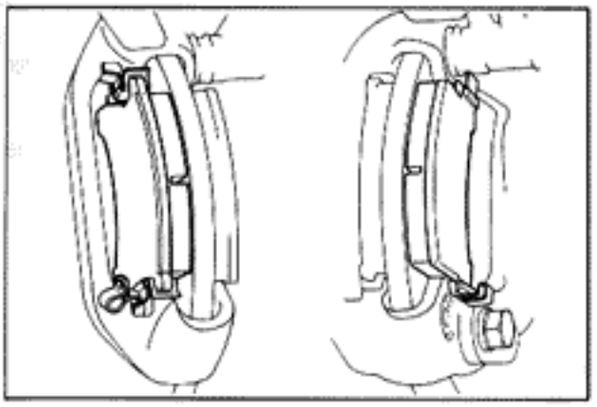

8. **INSTALL NEW PADS AND NEW ANTI-SQUEAL SHIM**
   (a) Install the pads onto each spring.

   NOTE: Install the outside pad so the wear indicator is at the bottom side.

   CAUTION: Do not allow oil or grease to touch the rubbing face.

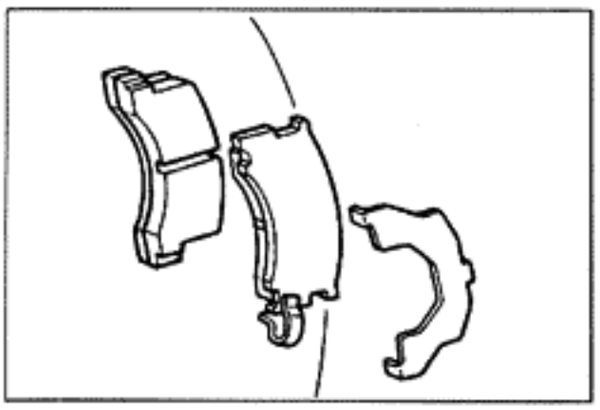

   (b) Install the anti-squeal shim toward the outside of the pad.

9. **LOWER CYLINDER**

   Remove the bolt from the torque plate and lower the cylinder.

   NOTE: Insert the cylinder carefully so the boot is not wedged.

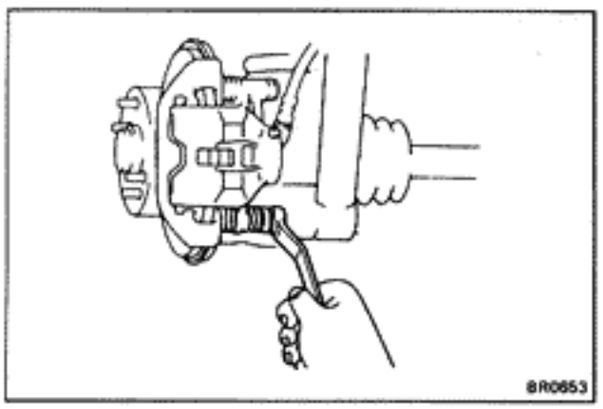

10. **INSTALL CYLINDER INSTALLATION BOLT**

    Torque the cylinder installation bolt.

    Torque: 200 kg-cm (14 ft-lb, 20 N·m)

11. **FILL BRAKE FLUID**

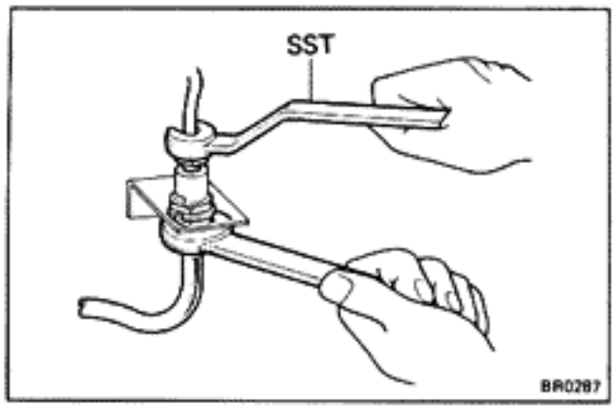

REMOVAL OF CYLINDER

(See page BR-20)

1. DISCONNECT BRAKE HOSE FROM BRAKE TUBE AND CYLINDER
   (a) Using SST and a spanner, disconnect the brake tube from the hose.

   SST 09751-36011

   (b) Use a container to catch the brake fluid.

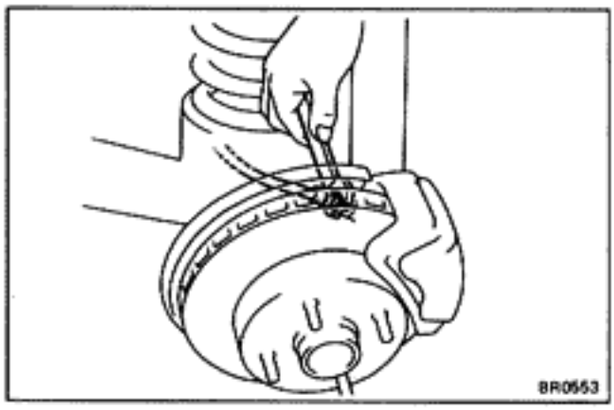

   (c) Remove the clip from brake hose.
   (d) Disconnect the brake hose from the cylinder.

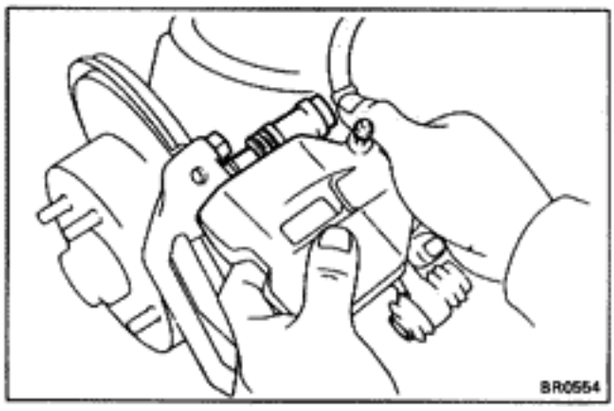

2. REMOVE CYLINDER
   (a) Hold the sliding bushing and unscrew the cylinder installation bolt.
   (b) Lift up and push out the cylinder from the torque plate pin.

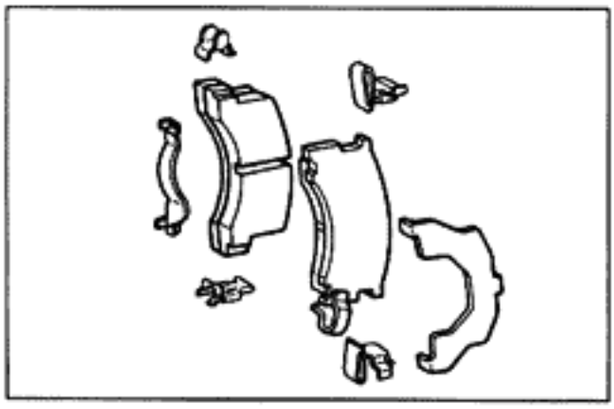

3. REMOVE FOLLOWING PARTS:
   (a) Anti-squeal shim
   (b) Brake pads
   (c) Anti-rattle springs
   (d) Pad guide plates
   (e) Pad support plate

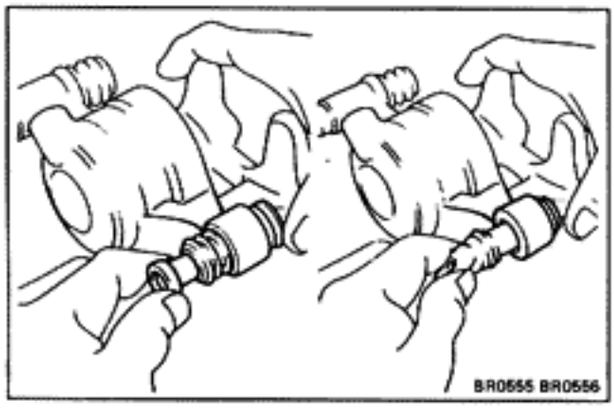

DISASSEMBLY OF CYLINDER

(See page BR-20)

1. REMOVE SLIDING BUSHING AND BOOT

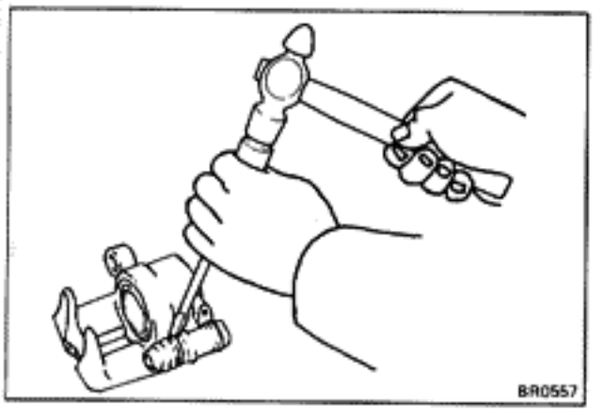

2. REMOVE MAIN PIN BOOT WITH A CHISEL

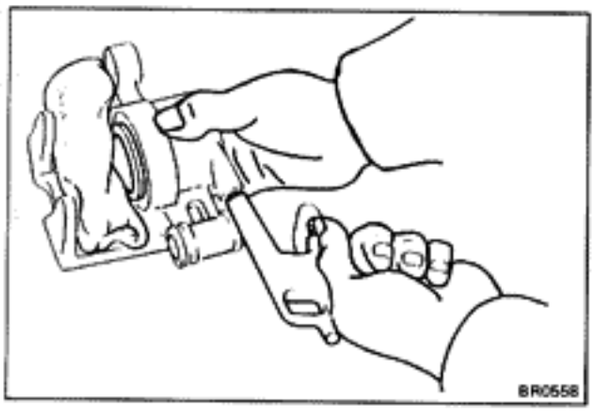

3. REMOVE PISTON FROM CYLINDER

Use compressed air to remove the piston from the cylinder.

WARNING: Do not place your fingers in front of the piston when using compressed air.

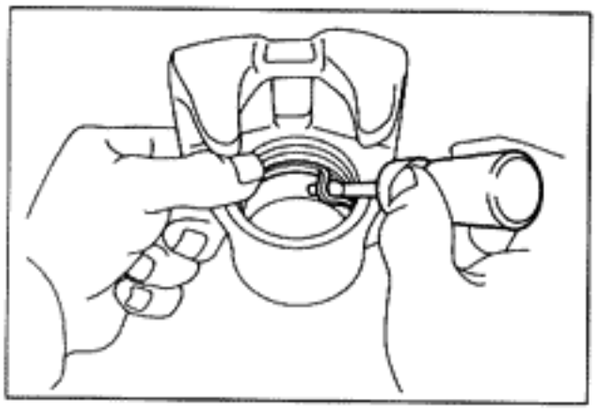

4. REMOVE CYLINDER BOOT AND SET RING FROM CYLINDER

5. REMOVE PISTON SEAL FROM CYLINDER

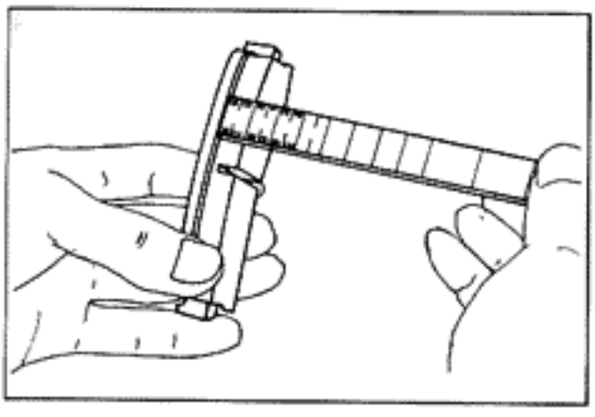

INSPECTION OF REAR BRAKE COMPONENTS

1. MEASURE PAD LINING THICKNESS

Standard thickness: 10.5 mm (0.413 in.)
Minimum thickness: 3.0 mm (0.118 in.)

Replace the pad if the thickness is less than the minimum (the 1.0 mm slit is no longer visible) or if it shows sign of uneven wear.

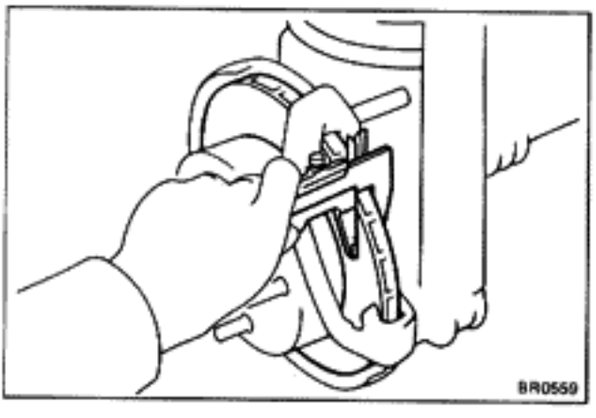

2. MEASURE ROTOR DISC THICKNESS

Standard thickness: 18.0 mm (0.709 in.)
Minimum thickness: 17.0 mm (0.669 in.)

If the disc thickness is less than minimum, replace the disc.

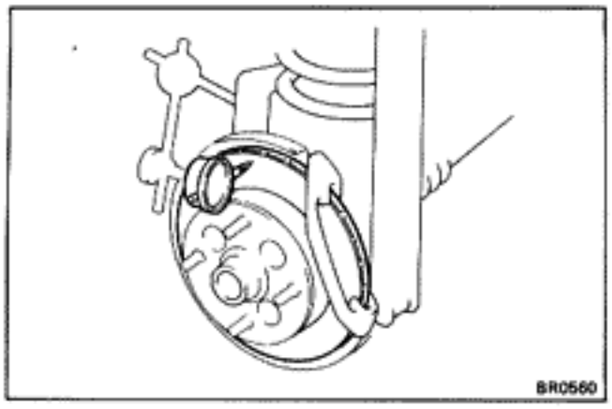

3. MEASURE ROTOR DISC RUNOUT

(a) Temporarily install the hub nuts in reverse.

(b) Measure the rotor disc runout at 10 mm (0.39 in.) from the outer edge of rotor disc.

Maximum runout: 0.15 mm (0.0059 in.)

If the runout is greater than the maximum, replace the disc.

4. IF NECESSARY, REPLACE ROTOR DISC

(a) Remove the torque plate from the rear axle housing.

(b) Remove the rotor disc and hub nuts.

(c) Install the rotor disc, and adjust the shoe clearance.

(d) Install the torque plate onto the rear axle housing.

Torque: 475 kg-cm (34 ft-lb, 47 N-m)

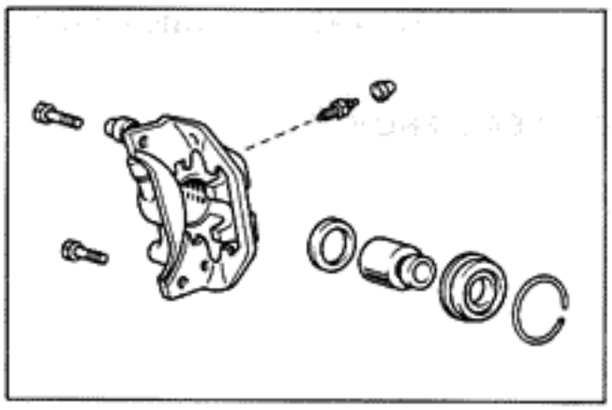

ASSEMBLY OF CYLINDER

(See page BR-20)

1. APPLY LITHIUM SOAP BASE GLYCOL GREASE TO FOLLOWING PARTS:

(a) Main pin boot

(b) Sliding pin and boot

(c) Piston seal and piston

(d) Dust boot

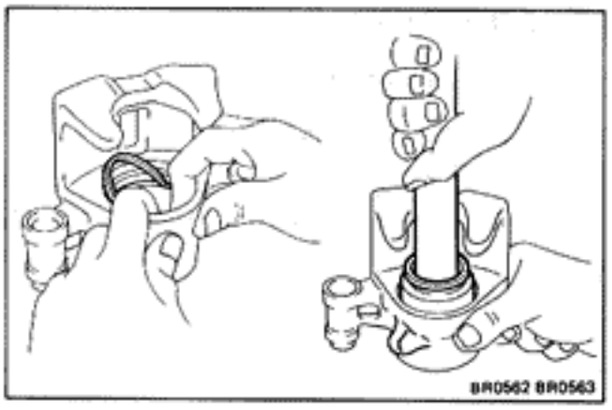

2. INSTALL PISTON SEAL AND PISTON IN CYLINDER

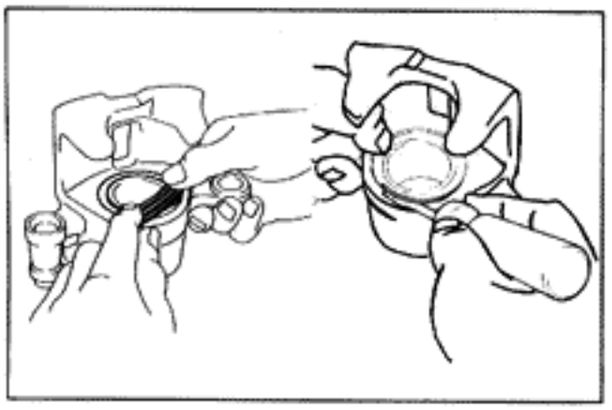

3. INSTALL CYLINDER BOOT AND SET RING IN CYLINDER

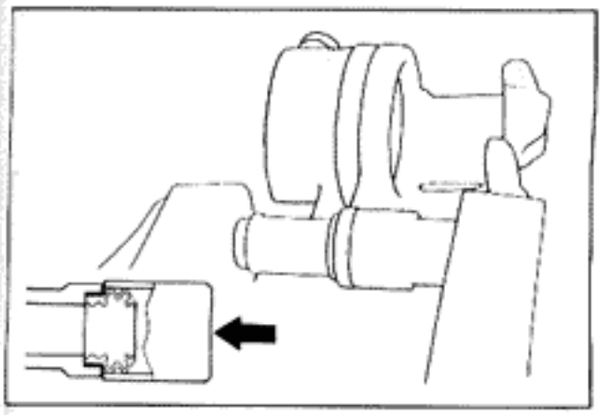

4. INSTALL MAIN PIN BOOT

Using a 21-mm socket wrench, press in the boot.

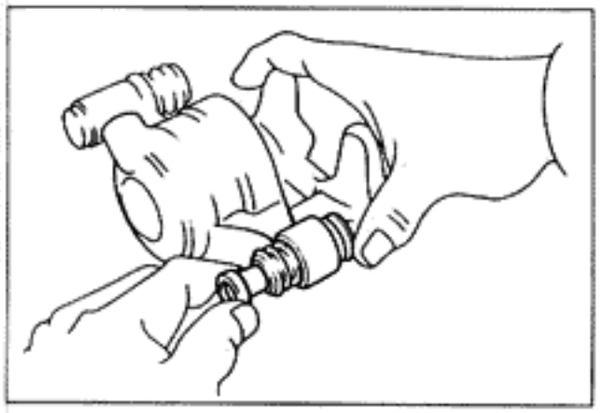

5. INSTALL DUST BOOT AND SLIDING BUSHING

(a) Install the dust boot.

NOTE: Be careful that the seal does not fold under.

(b) Install the bushing into the boot facing the flange toward the inside.

INSTALLATION OF CYLINDER

(See page BR-20)

1. INSTALL FOLLOWING PARTS:

(a) Pad support plate

(b) Pad guide plates

(c) Anti-rattle springs

(d) Brake pads

(e) Anti-squeal shim

SEE
REAR BRAKE
REPLACEMENT OF BRAKE PADS
BR-20

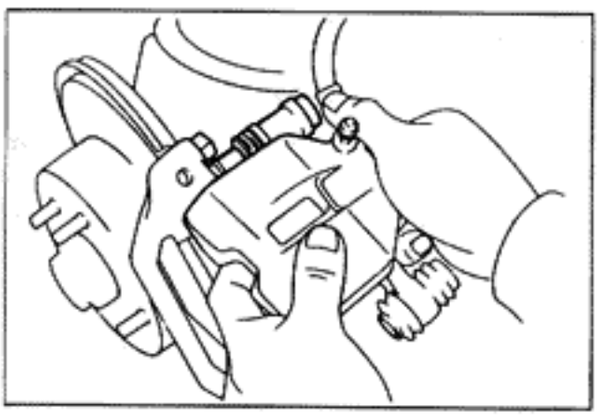

2. INSTALL CYLINDER

(a) Install the cylinder onto the main pin.

NOTE: Make sure that the boot end is installed into the groove of the main pin.

(b) Insert the cylinder installation bolt into the cylinder body.

(c) Install the cylinder over the brake pads.

3. TORQUE CYLINDER INSTALLATION BOLT

Torque the bolt.

Torque: 200 kg-cm (14 ft-lb, 20 N·m)

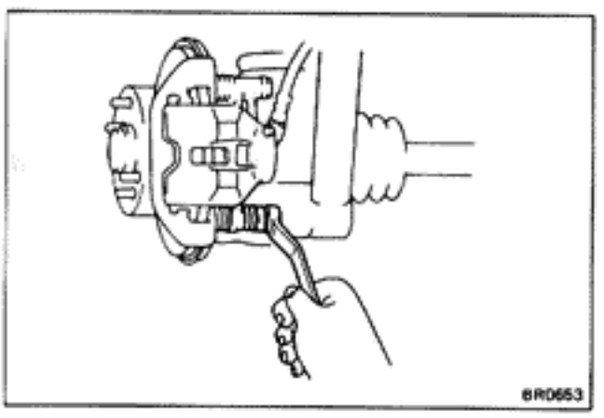

4. CONNECT BRAKE LINE

(a) Connect the brake hose to the cylinder.

Torque: 235 kg-cm (17 ft-lb, 23 N·m)

(b) Using SST, connect brake hose to the brake tube.

SST 09751-36011

Torque: 155 kg-cm (11 ft-lb, 15 N·m)

5. FILL BRAKE RESERVOIR WITH BRAKE FLUID AND BLEED BRAKE SYSTEM (See page BR-7)

Rear Parking Brake

COMPONENT

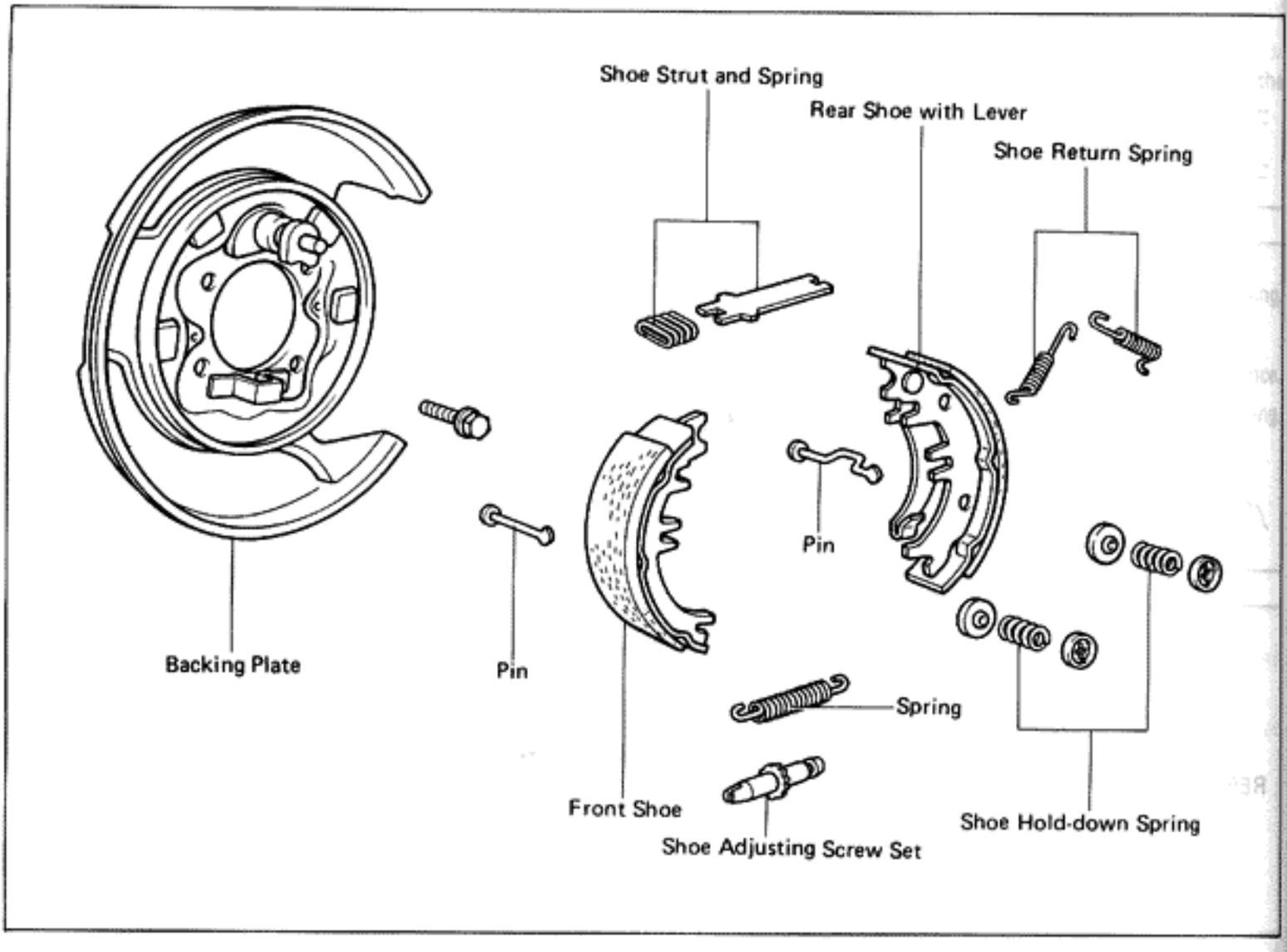

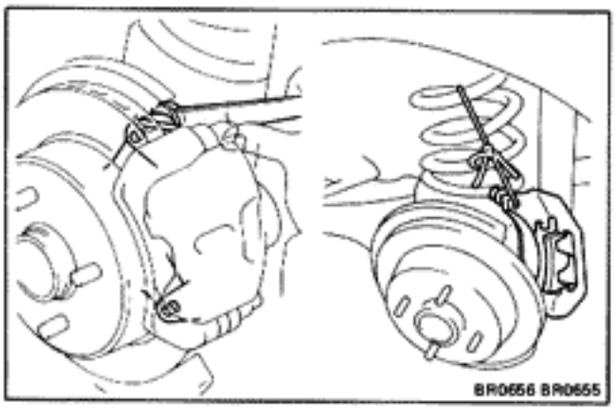

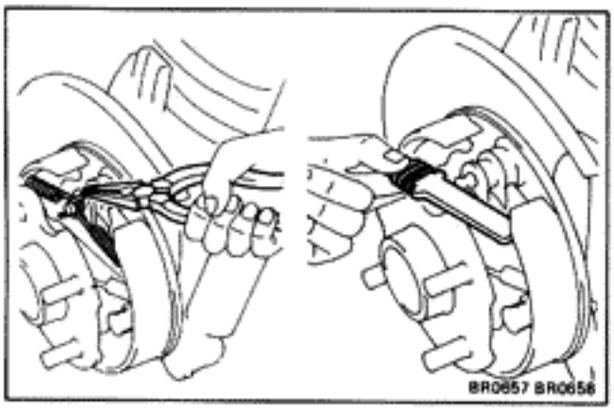

DISASSEMBLY OF PARKING BRAKE

1. **REMOVE REAR DISC BRAKE ASSEMBLY**
   (a) Remove two torque plate mount bolts and remove the disc brake.
   (b) Suspend the disc brake so the hose is not stretched.
2. **REMOVE ROTOR DISC**
3. **MEASURE BRAKE SHOE LINING THICKNESS**
   (See page BR-33)
4. **REMOVE SHOE RETURN SPRINGS**
5. **REMOVE SHOE STRUT WITH SPRING**
6. **REMOVE FRONT SHOE, SHOE ADJUSTING SCREW SET AND TENSION SPRING**
   (a) Slide out the front shoe and remove the shoe adjusting screw set.
   (b) Remove the tension spring and front shoe.

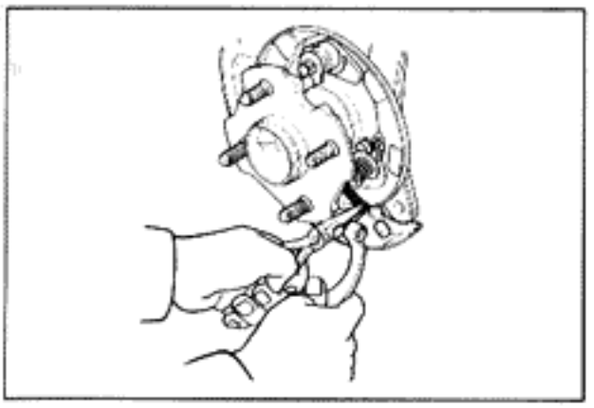

7. REMOVE REAR SHOE

(a) Slide out the rear shoe.

(b) Disconnect the parking brake cable from the parking brake shoe lever.

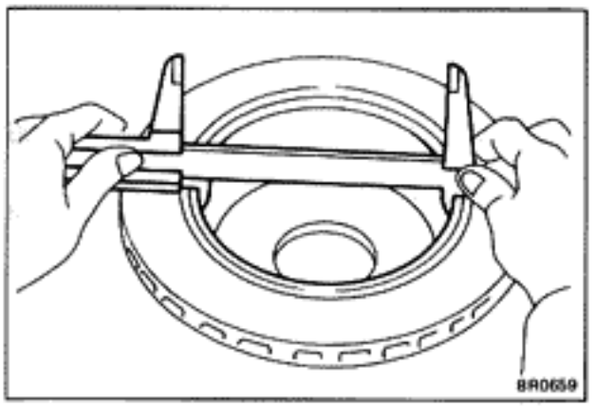

INSPECTION AND ADJUSTMENT OF PARKING BRAKE COMPONENTS

1. MEASURE BRAKE DRUM INSIDE DIAMETER

Standard inside diameter : 167 mm (6.57 in.)
Maximum inside diameter: 168 mm (6.61 in.)

If the drum is scored or worn, the brake drum may be lathed to the maximum inside diameter.

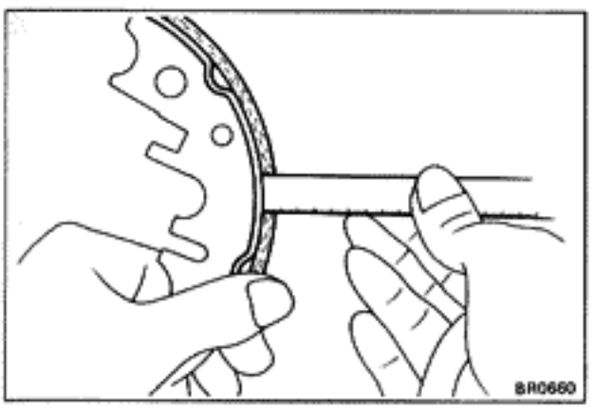

2. MEASURE BRAKE SHOE LINING THICKNESS

Standard thickness : 2.0 mm (0.079 in.)
Minimum thickness : 1.0 mm (0.039 in.)

If the shoe lining is less than minimum, replace the parking brake shoes.

NOTE: In order to maintain effective brakes, replace all of the shoes if the thickness of any one is not within specification.

3. INSPECT REAR PARKING BRAKE LINING AND DRUM FOR PROPER CONTACT

Replace the brake or lathe the brake disc as necessary.

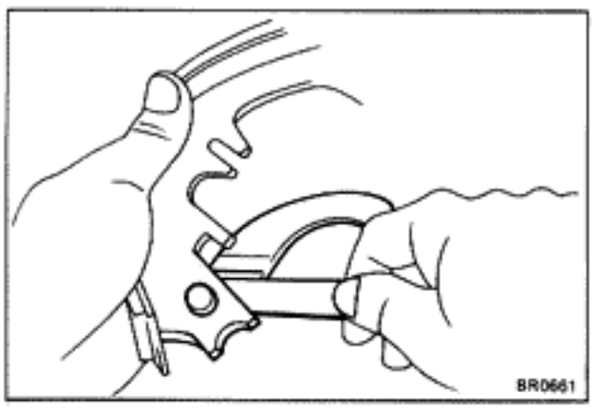

4. MEASURE CLEARANCE BETWEEN PARKING BRAKE SHOE AND LEVER

Using a feeler gauge, measure the clearance.

Standard clearance: 0 – 0.35 mm (0 – 0.0138 in.)

If the clearance is not within specification, replace the shim with one of the correct size.

Thickness	mm (in.)	Thickness	mm (in.)
0.3	(0.012)	0.9	(0.035)
0.6	(0.024)		

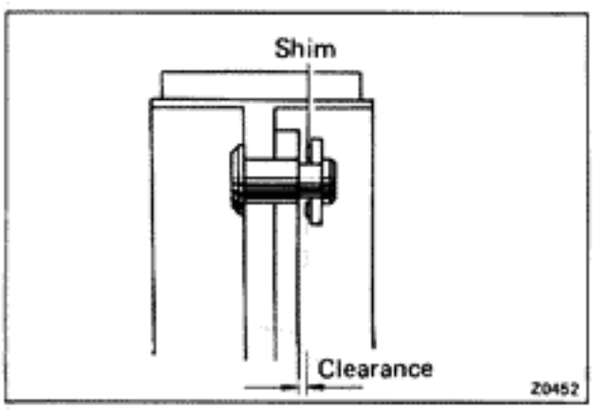

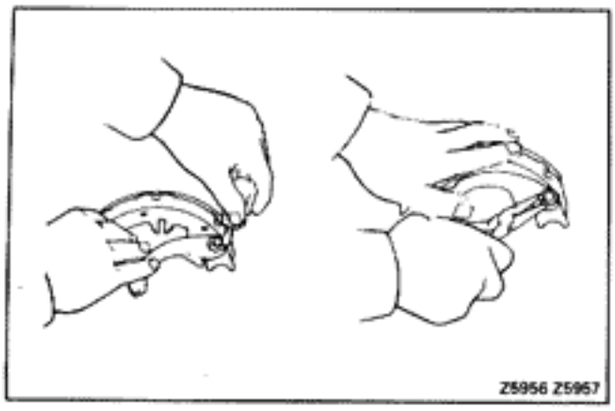

5. IF NECESSARY, REPLACE SHIM

(a) Remove the parking brake lever, and install the correct size shim.

(b) Install the parking brake lever with a new C-washer.

(c) Remeasure the clearance.

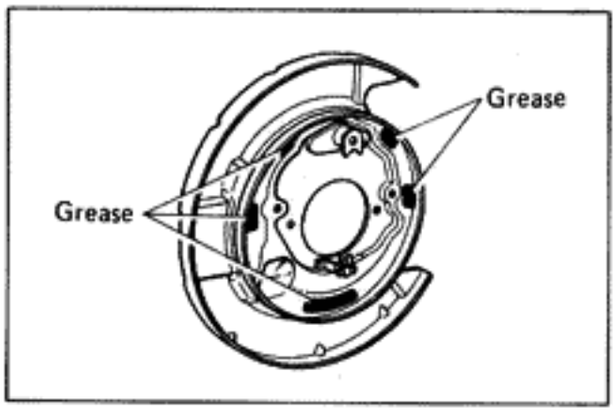

ASSEMBLY OF PARKING BRAKE

(See page BR-26)

1. APPLY NON-MELTING TYPE GREASE ON BACKING PLATE AS SHOWN

Apply non-melting type grease to the sliding surfaces of the shoe.

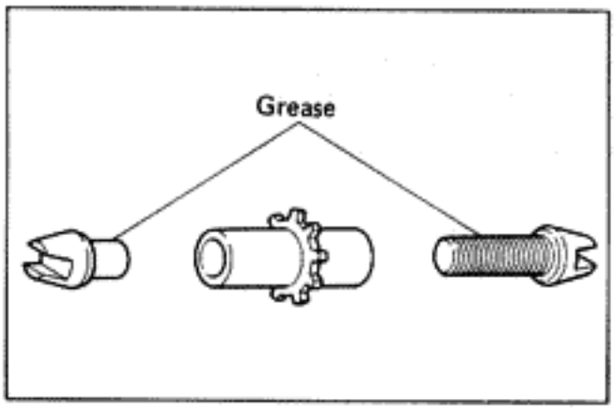

2. APPLY NON-MELTING TYPE GREASE TO SHOE ADJUSTING SCREW SET

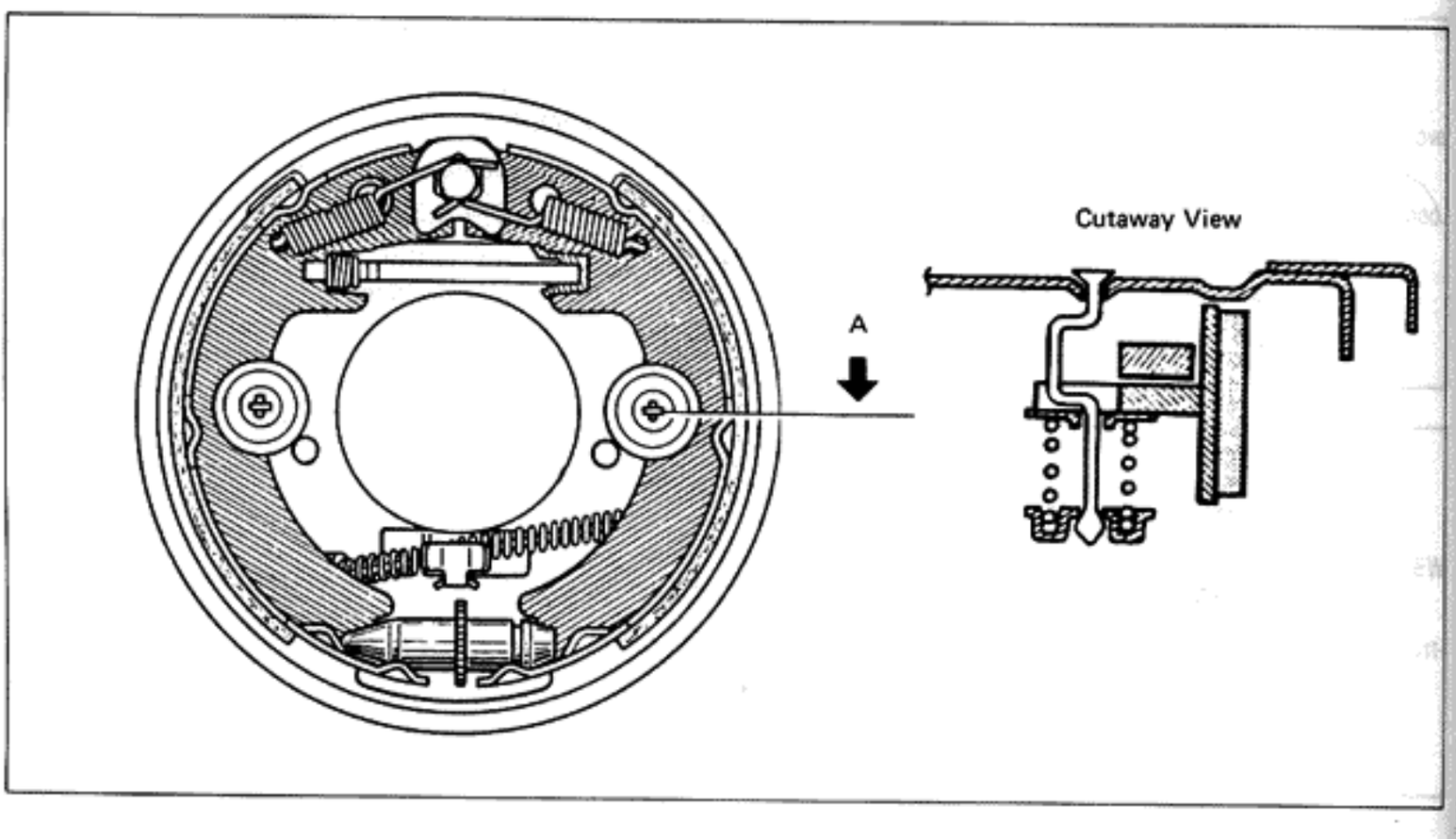

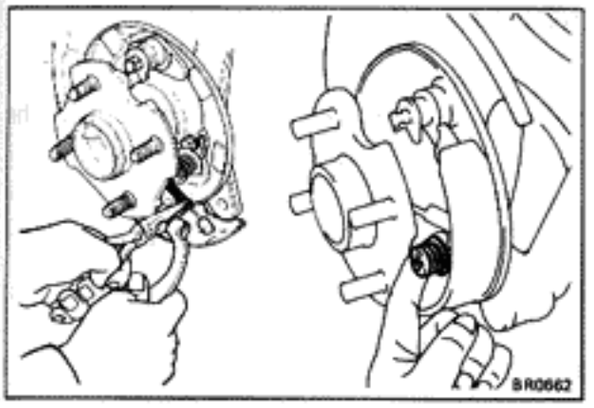

3. CONNECT PARKING BRAKE LEVER TO CABLE

Compress the cable spring and connect the lever.

4. INSTALL REAR SHOE

Slide in the rear shoe between the shoe hold-down spring seat and the backing plate.

CAUTION: Do not allow oil or grease to touch the rubbing face.

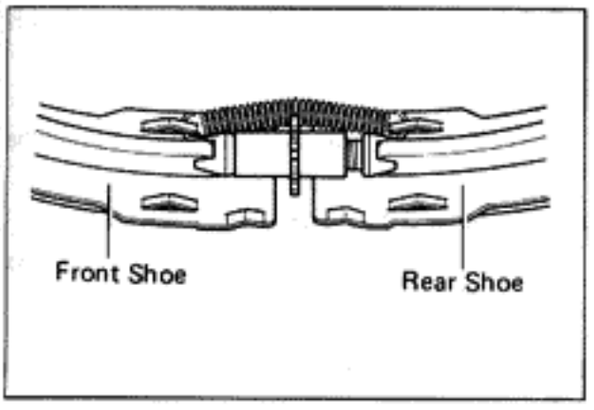

5. INSTALL TENSION SPRING, FRONT SHOE AND SHOE ADJUSTING SCREW SET

(a) Install the tension spring to the rear shoe.

(b) Install the front shoe to the tension spring.

(c) Install the shoe adjusting screw set between the front and rear shoes.

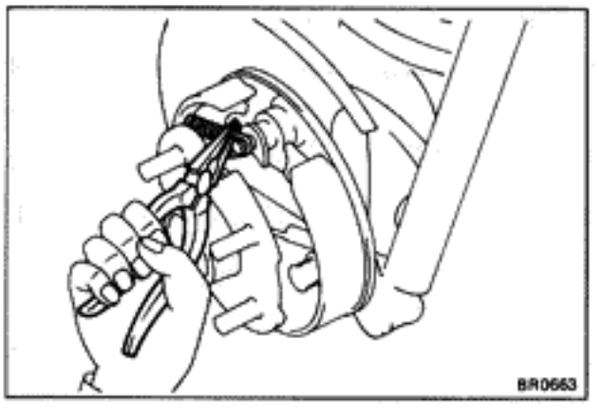

(d) Slide in the front shoe between the shoe hold-down spring seat and the backing plate.

6. INSTALL FRONT SHOE RETURN SPRING

7. INSTALL STRUT WITH SPRING

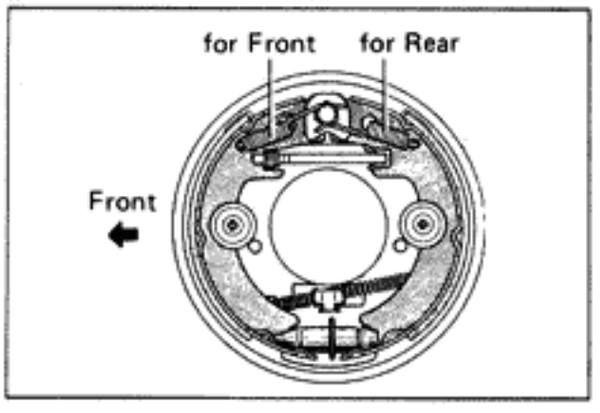

8. INSTALL REAR SHOE RETURN SPRING

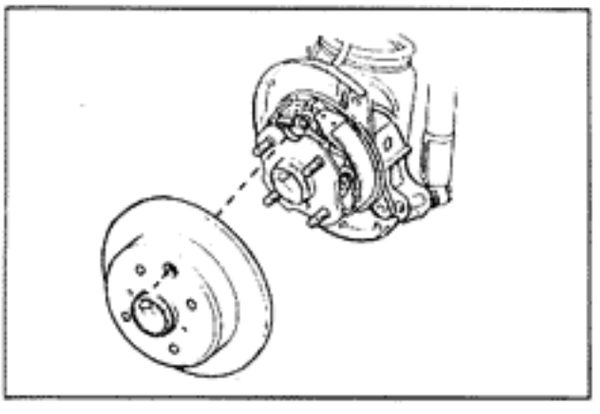

9. INSTALL REAR DISC

(a) Before installing, polish the disc and shoe surfaces with sandpaper.

(b) Align the groove on the rear axle shaft flange and service hole on the disc.

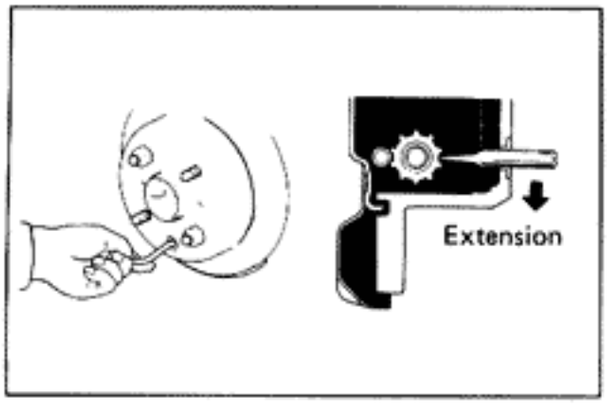

10. ADJUST PARKING BRAKE SHOE CLEARANCE

(a) Temporarily install hub nuts.

(b) Turn the adjuster and expand the shoes until the rotor disc locks.

(c) Return the adjuster 8 notches.

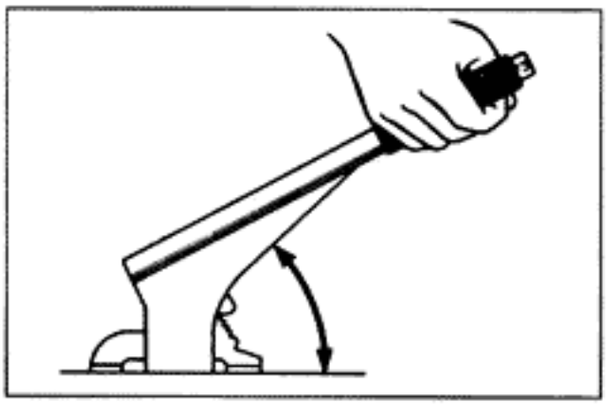

11. INSPECT AND ADJUST PARKING BRAKE LEVER TRAVEL

Check that parking brake lever travel is correct.
Pull the parking brake lever all the way up, and count the notches of lever travel.

Parking brake lever travel at 20 kg (44.1 lb, 196 N):
5 – 8 clicks

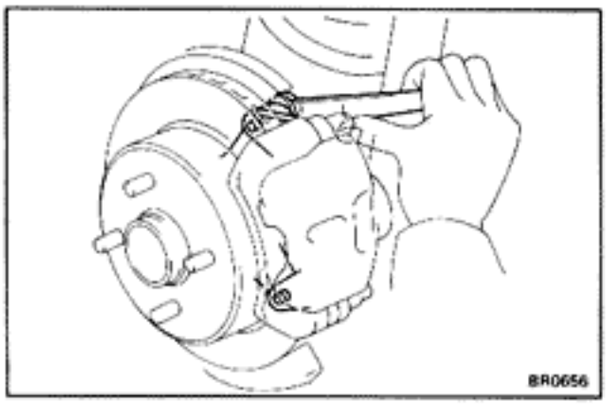

12. INSTALL REAR DISC BRAKE ASSEMBLY

Install the disc brake and torque two torque plate mount bolts.

Torque: 475 kg-cm (34 ft-lb, 47 N·m)

13. BED DOWN PARKING BRAKE SHOES AND DRUM

(a) Drive the vehicle at about 50 km/h (31 mph) on a safe, level and dry road.

(b) With the parking brake release button pushed in, pull on the lever with 9 kg (19.8 lb or 88 N) of force.

(c) Drive the vehicle for about 400 meters (1/4 mile) in this condition.

(d) Repeat this procedure two or three times.

14. RECHECK PARKING BRAKE LEVER TRAVEL

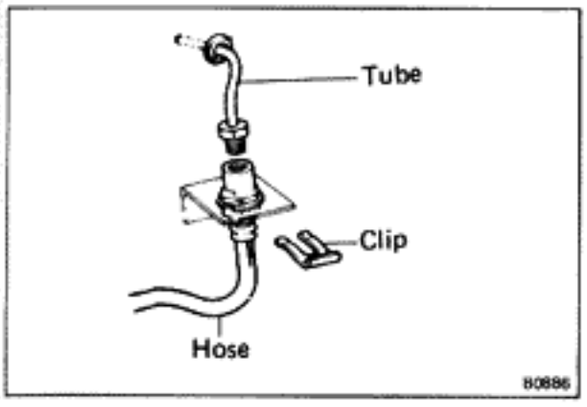

BRAKE HOSES AND TUBES

DISCONNECT AND CONNECT HOSE AND TUBE

1. DISCONNECT HOSE AND TUBE

(a) Disconnect the clip.

(b) Using a wrench to hold the hose and SST to hold the tube, disconnect the tube and hose.

SST 09751-36011

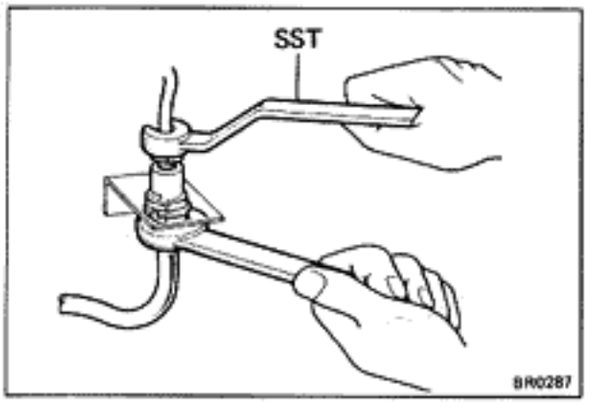

2. CONNECT HOSE AND TUBE

(a) Connect the hose and tube by hand.

(b) Using a wrench to hold the hose and SST to hold the tube, torque the connection.

SST 09751-36011

Torque: 155 kg-cm (11 ft-lb, 15 N·m)

(c) Install a new hose clip.

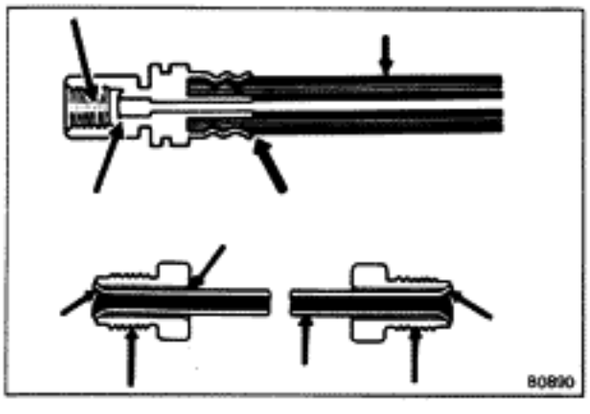

INSPECTION OF BRAKE HOSES AND TUBES

1. INSPECT BRAKE HOSES

(a) Inspect the hose for damage, cracks or swelling.

(b) Inspect the threads for damage.

2. INSPECT BRAKE TUBES

(a) Inspect the tube for damage, cracks, dents or corrosion.

(b) Inspect the threads for damage.

STEERING

	Page
PRECAUTIONS	SR-2
TROUBLESHOOTING	SR-2
ON-VEHICLE INSPECTION	SR-2
STEERING COLUMN ASSEMBLY WITH TILT STEERING	SR-3
POWER STEERING	SR-13
On-Vehicle Inspection	SR-13
Bleeding of Power Steering System	SR-15
Oil Pressure Check	SR-16
Power Steering Pump	SR-18
Gear Housing	SR-27

PRECAUTIONS

Care must be taken to replace parts properly because they could affect the performance of the steering system and result in a driving hazard.

TROUBLESHOOTING

Problem	Possible cause	Remedy	Page
Hard steering	Tires improperly inflated	Inflate tires to proper pressure	FA-3
	Power steering belt loose	Tighten belt	SR-26
	Oil level in reservoir low	Check reservoir	SR-13
	Insufficient lubricant	Lubricate suspension and steering linkage	
	Excessive caster	Check front end alignment	FA-3
	Lower arm ball joints worn	Replace lower arm ball joints	FA-15
	Power steering unit faulty	Check power steering unit	SR-13
Poor return	Tires improperly inflated	Inflate tires to proper pressure	FA-3
	Insufficient lubricant	Lubricate suspension and steering linkage	
	Wheel alignment incorrect	Check front end alignment	FA-3
Excessive play	Steering gear loose	Tighten gear bolts	
	Main shaft worn	Replace main shaft	SR-5
	Lower arm ball joints worn	Replace lower arm ball joints	FA-15

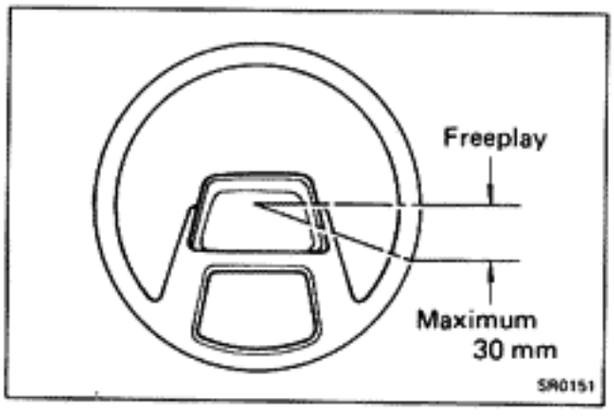

ON-VEHICLE INSPECTION

1. CHECK THAT STEERING WHEEL FREEPLAY IS CORRECT

With the vehicle stopped and pointed straight ahead, rock the steering wheel gently back and forth with light finger pressure. Freeplay should not exceed the maximum limit.

Maximum play: 30 mm (1.18 in.)

If incorrect, repair as required.

2. CHECK STEERING LINKAGE AND GEAR HOUSING

(a) Check the steering linkage for looseness or damage. Check that:

- Tie rod ends do not have excessive play.
- Boots are not damaged.
- Boot clamps are not loose.

(b) Check the gear housing for grease leakage or oozing.

STEERING COLUMN ASSEMBLY WITH TILT STEERING

REMOVAL OF STEERING COLUMN

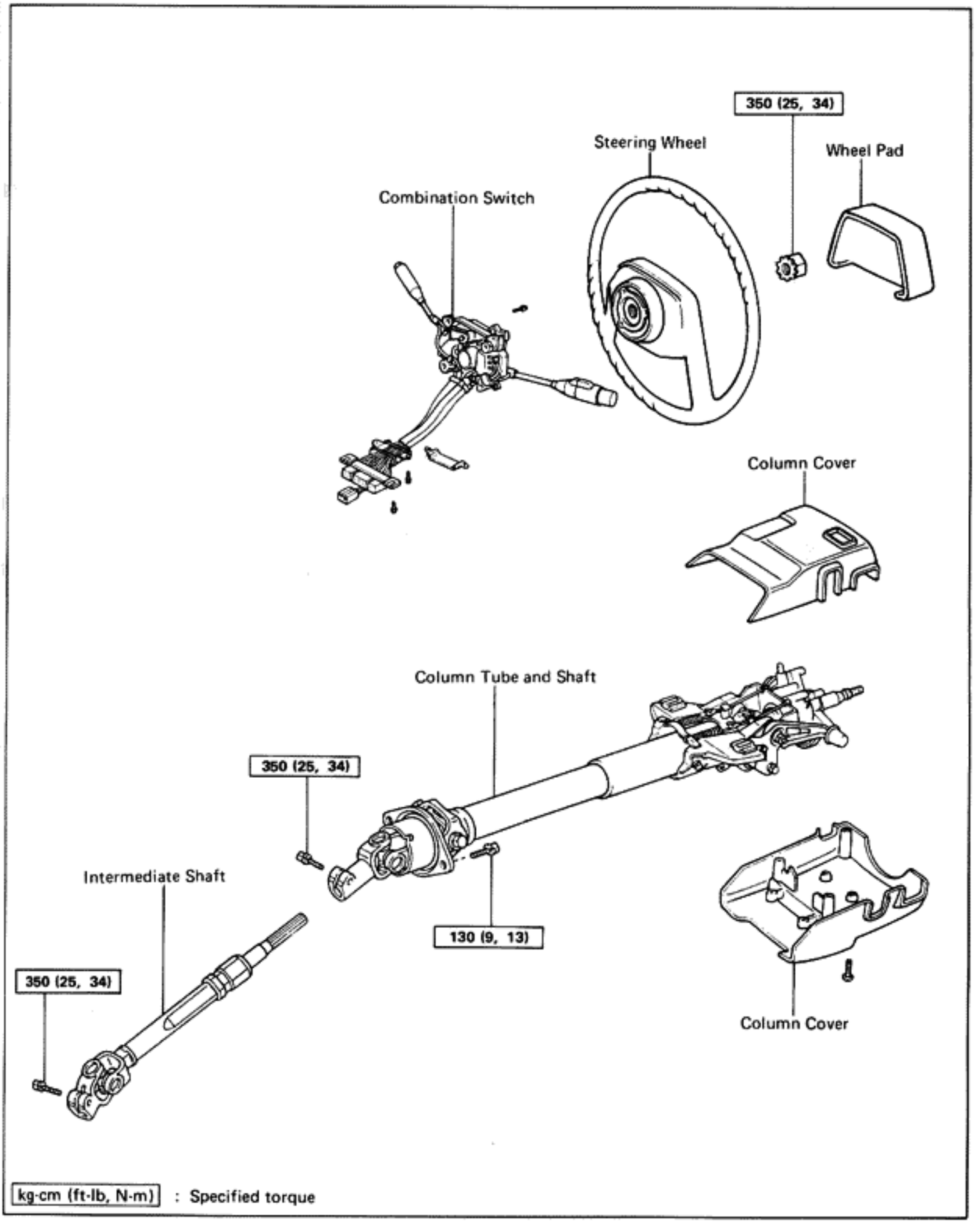

kg-cm (ft-lb, N-m) : Specified torque

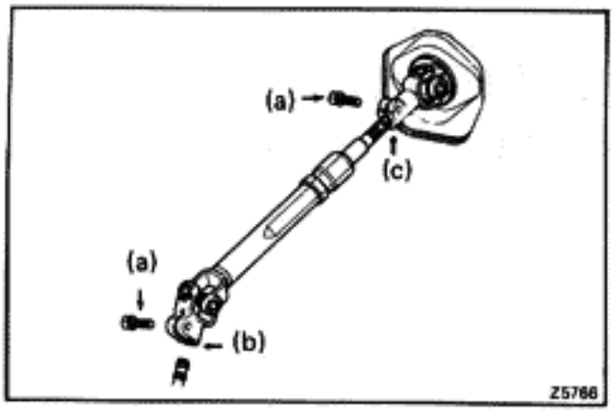

1. **REMOVE NEGATIVE CABLE FROM BATTERY**
2. **REMOVE INTERMEDIATE SHAFT**
   (a) Remove the two set bolts.
   (b) Remove the rack housing side first.
   (c) Remove the column side.

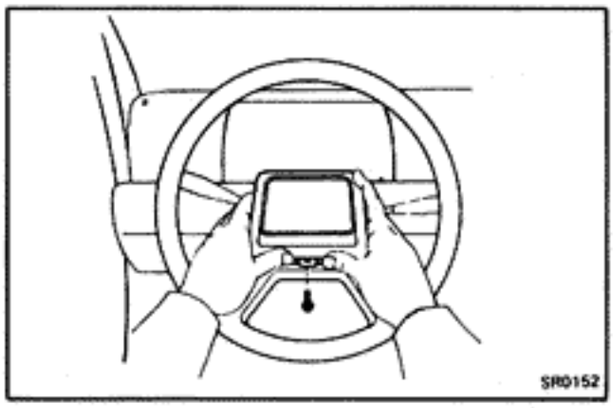

3. **REMOVE STEERING WHEEL**
   (a) Remove the screw at the lower portion of the steering wheel pad and pull the pad out upward.
   (b) Remove the steering wheel nut.

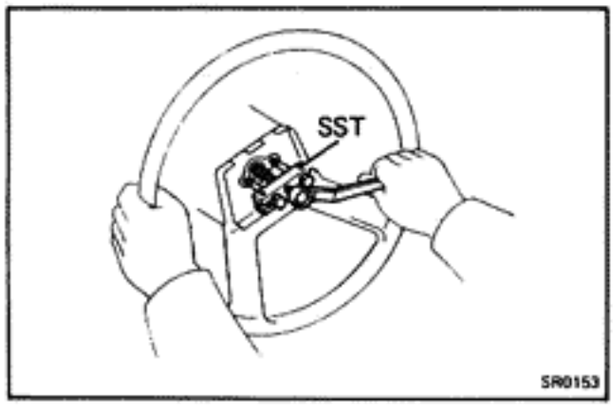

   (c) Using SST, remove the steering wheel.
   SST 09609-20011

4. **REMOVE INSTRUMENT LOWER PANEL AND AIR DUCT**
5. **REMOVE COLUMN COVER AND COMBINATION SWITCH**

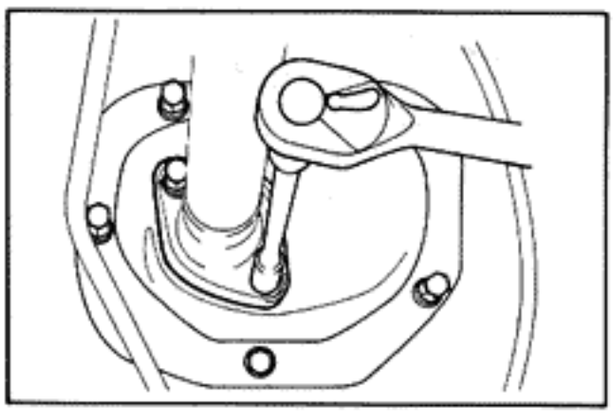

6. **REMOVE TWO MOUNTING BOLTS FROM COLUMN HOLE COVER PLATE**
7. **REMOVE TWO COLUMN BRACKET MOUNTING NUTS**

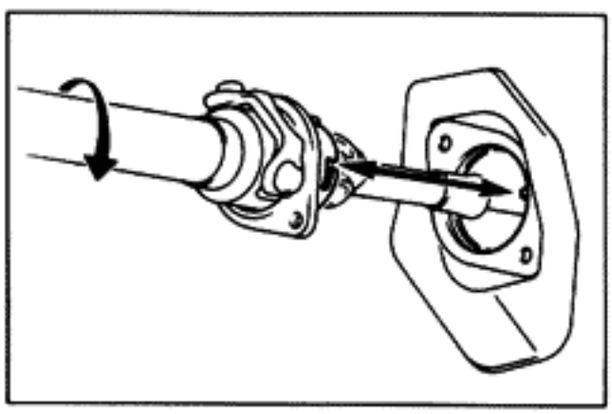

8. **PULL OUT COLUMN TUBE AND SHAFT**
   Turn the column tube as shown and pull out the shaft.

COMPONENTS

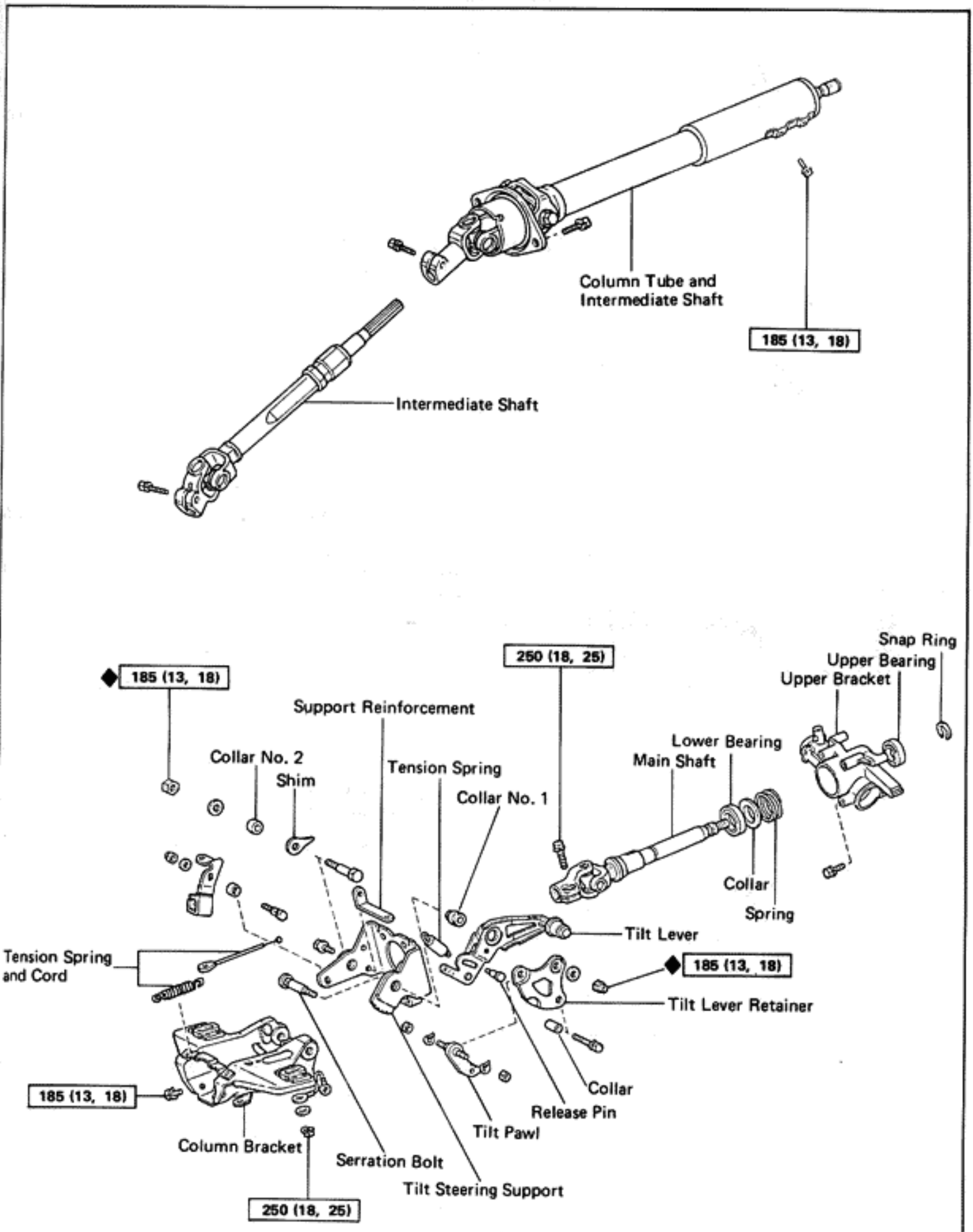

kg-cm (ft-lb, N·m) : Specified torque

◆ Non-reusable part

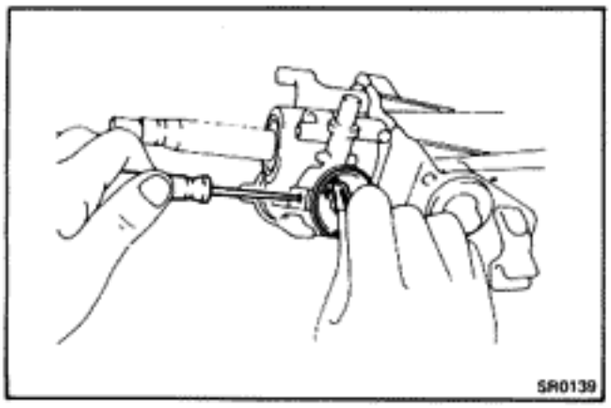

DISASSEMBLY OF STEERING COLUMN ASSEMBLY AND TILT MECHANISM

(See page SR-5)

1. REMOVE IGNITION KEY CYLINDER

(a) Place the ignition key at the ACC position.

(b) Push down the stop key with a thin rod, and pull out the key cylinder.

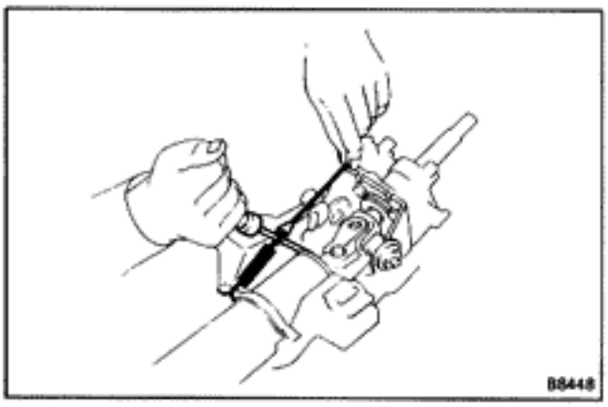

2. REMOVE TENSION SPRINGS AND CORDS

(a) Fully tilt the main shaft upward.

(b) Pry the spring and remove the cord and spring.

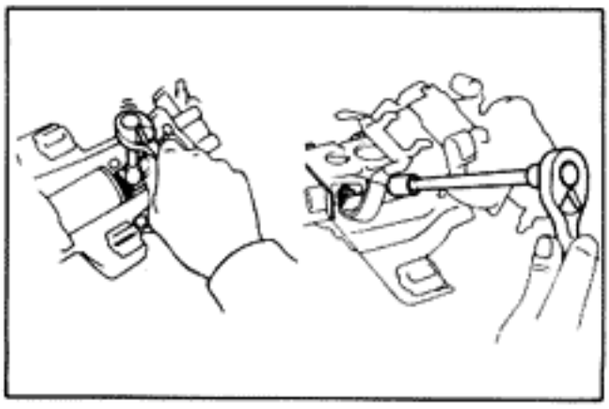

3. DISCONNECT INTERMEDIATE SHAFT AND MAIN SHAFT

(a) Place matchmarks on the intermediate shaft and universal joint.

(b) Remove the joint bolt.

(c) Remove the four bracket bolts.

(d) Separate the tilt mechanism from the column tube.

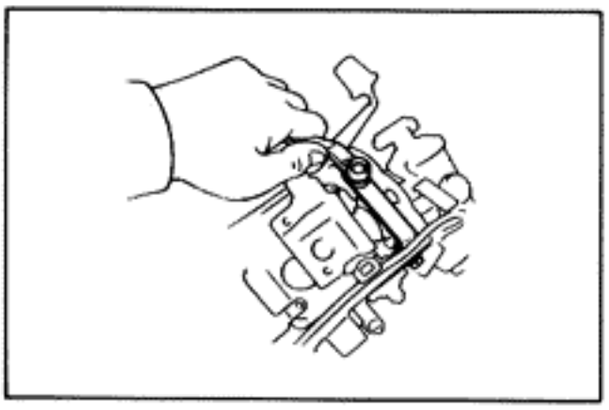

4. DISCONNECT UPPER BRACKET FROM TILT STEERING SUPPORT

(a) Remove the support reinforcement.

(b) Remove the three bolts and disconnect the bracket from the support.

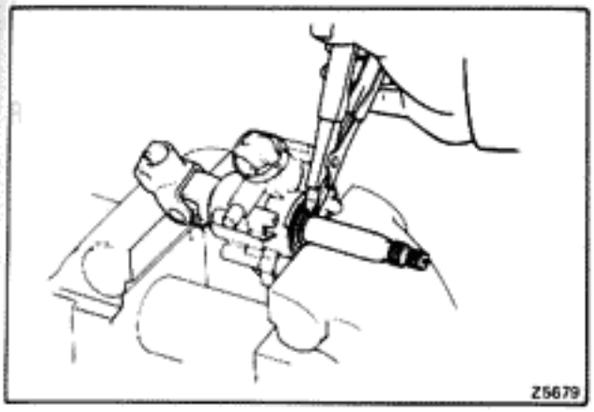

5. **REMOVE MAIN SHAFT FROM UPPER BRACKET**
   (a) Using a soft jaw vise and snap ring pliers, remove the snap ring.
   (b) Pull out the main shaft from the bracket.

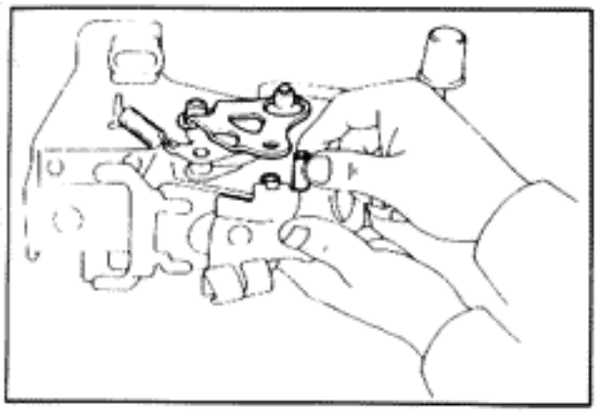

6. **DISASSEMBLE TILT STEERING SUPPORT AND COLUMN BRACKET**
   (a) Remove the two nuts, bolt and retainer.
   (b) Take out the collar and release pin.

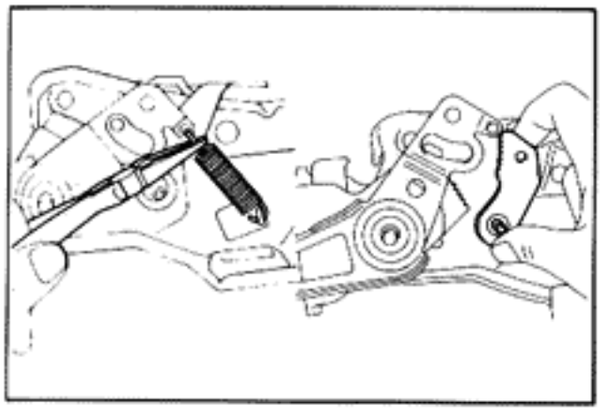

   (c) Remove the tension spring and take out the tilt pawl.

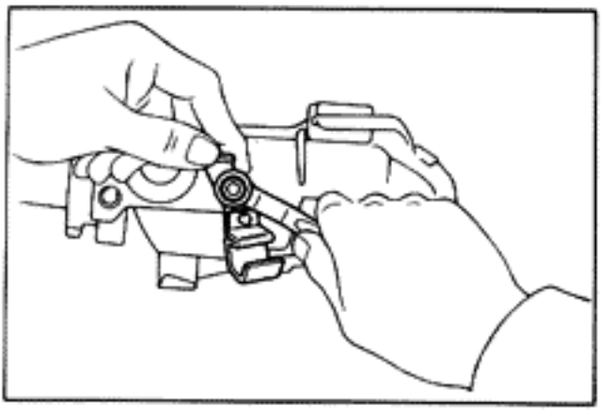

   (d) Remove the guide pin bolt, support bolt and shim.

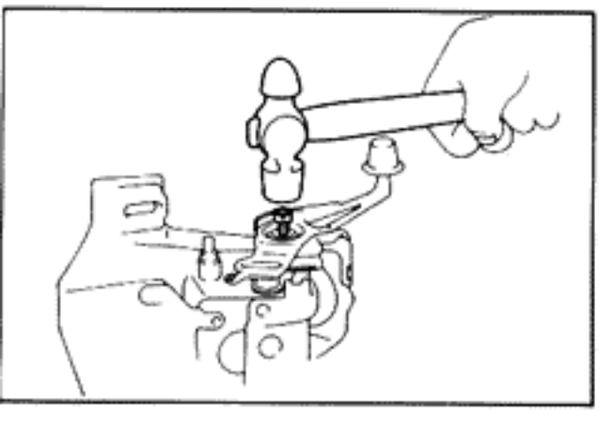

   (e) Using a hammer, rèmove the serration bolt and tilt lever.

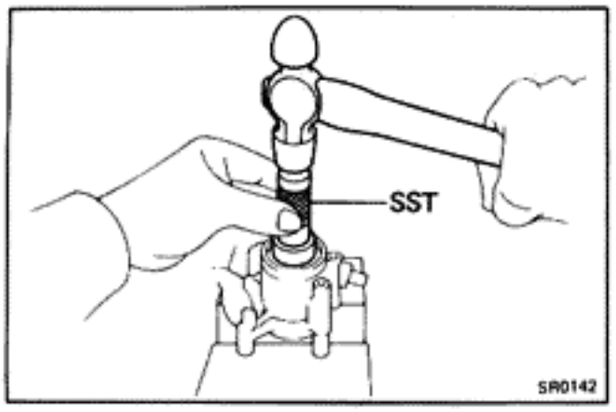

INSPECTION AND REPAIR OF STEERING COLUMN ASSEMBLY

1. IF NECESSARY, REPLACE BEARING IN UPPER BRACKET

(a) Using SST and a hammer, remove the bearing.

SST 09620-30010 (09623-30010)

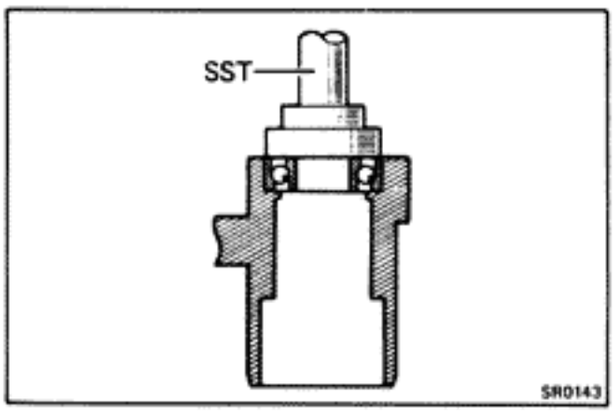

(b) Pack MP grease into the bearing.

(c) Using SST and a hammer, drive the bearing into the bracket.

SST 09620-30010 (09624-30010, 09631-00020)

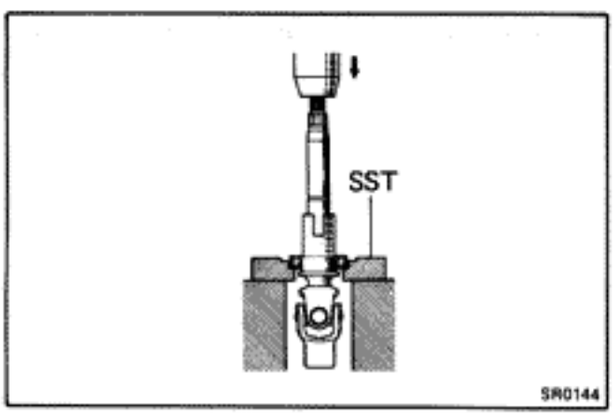

2. IF NECESSARY, REPLACE LOWER BEARING

(a) Using SST and a press, remove the lower bearing from the main shaft.

SST 09527-20011

(b) Pack MP grease into the bearing.

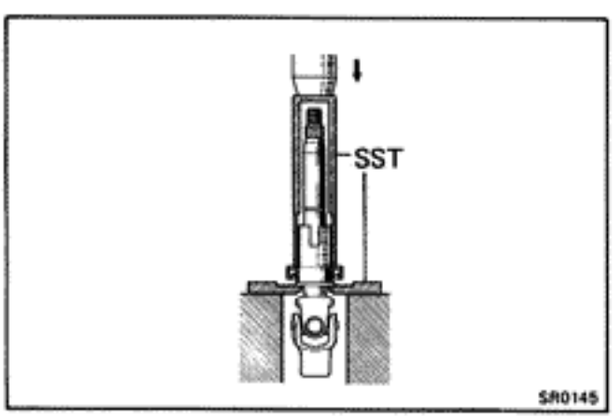

(c) Using SST and a press, assemble the lower bearing and main shaft.

SST 09236-00101 and 09612-22011

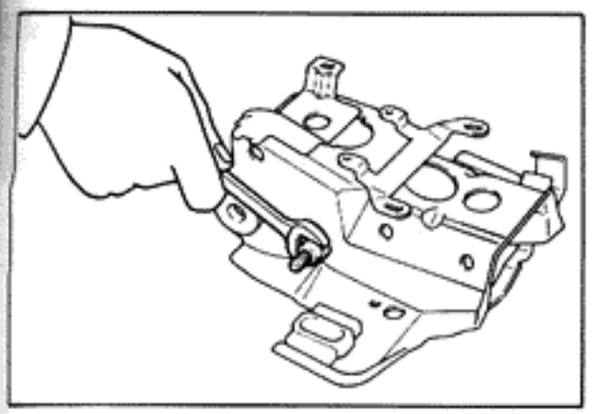

ASSEMBLY OF STEERING COLUMN ASSEMBLY AND TILT MECHANISM

(See page SR-5)

1. COAT ALL RUBBING PARTS WITH MP GREASE

2. ASSEMBLE PAWL SET BOLT

   Torque: 185 kg-cm (13 ft-lb, 18 N-m)

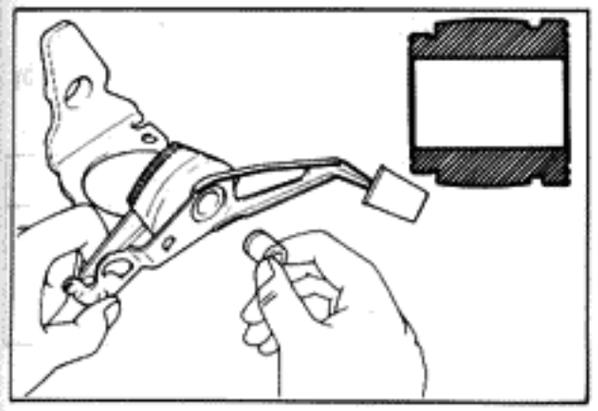

3. ASSEMBLE TILT LEVER TO SUPPORT

   (a) Select a collar No. 1 which will eliminate all play.

Outer diameter	mm (in.)
17.989 – 17.996	(0.7082 – 0.7085)
17.996 – 18.003	(0.7085 – 0.7088)
18.003 – 18.010	(0.7088 – 0.7091)
18.010 – 18.017	(0.7091 – 0.7093)
18.017 – 18.024	(0.7093 – 0.7096)

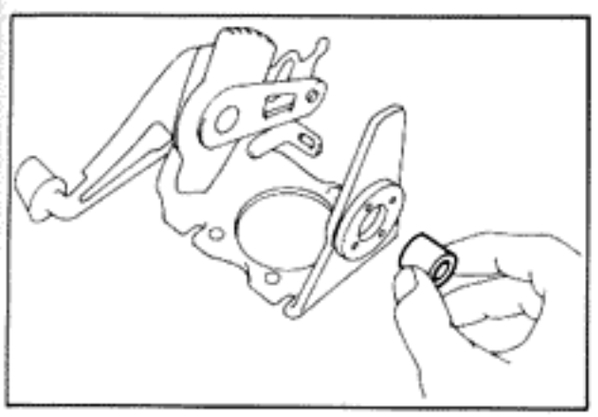

   (b) Install tilt lever and collar No. 1 to the support.

   (c) Select a collar No. 2 which will eliminate all play.

Outer diameter	mm (in.)
17.982 – 18.000	(0.7080 – 0.7087)
18.000 – 18.018	(0.7087 – 0.7094)

   (d) Install collar No. 2 to the support.

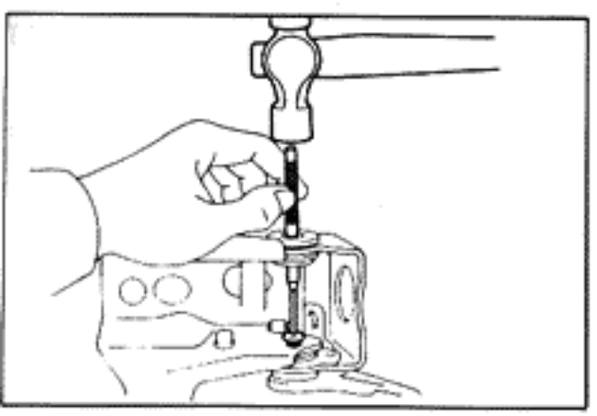

   (e) Drive the serration bolt into the support.

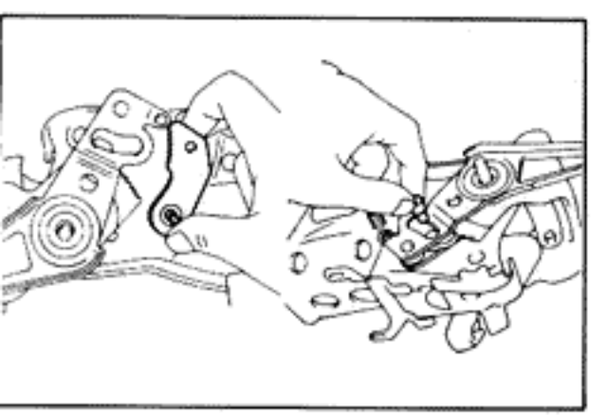

   (f) Install the tilt pawl, tension spring and the release pin.

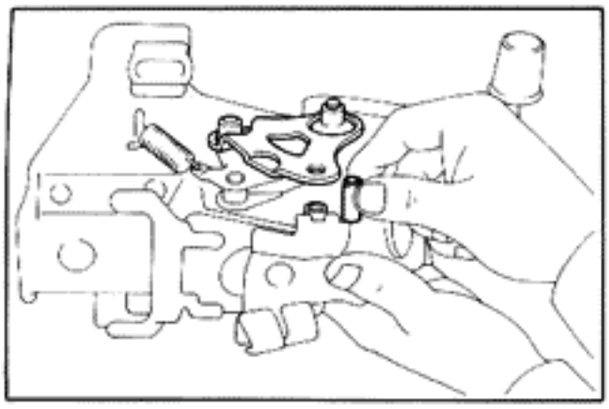

(g) Assemble the collar and tilt lever retainer.

Torque: 185 kg-cm (13 ft-lb, 18 N·m)

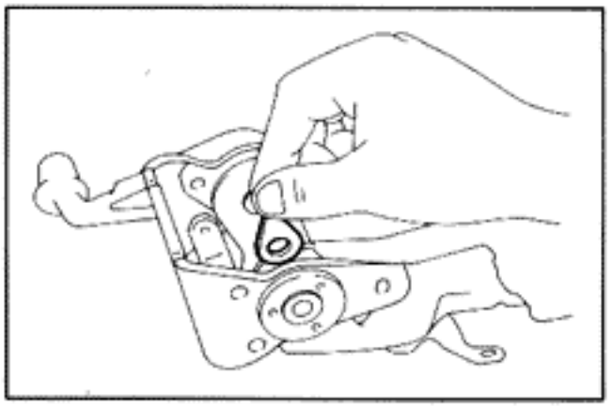

4. INSTALL SHIM, BOLT AND NUT

(a) Select a shim which fits snugly when pressed in by hand.

Thickness	mm (in.)	Thickness	mm (in.)
0.2	(0.008)	1.4	(0.055)
0.5	(0.020)	1.8	(0.071)
0.8	(0.031)		

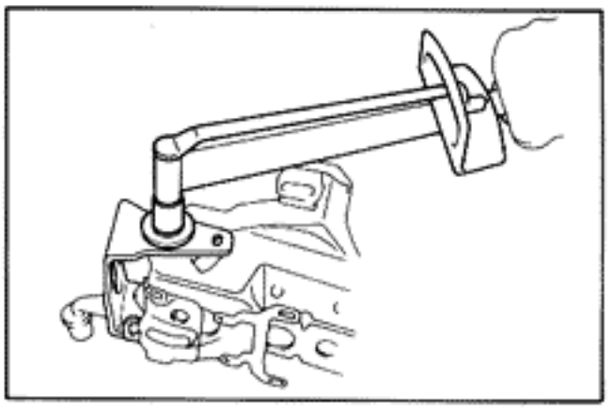

(b) Install the shim, bolt, washer and a lock nut.

Torque: 185 kg-cm (13 ft-lb, 18 N·m)

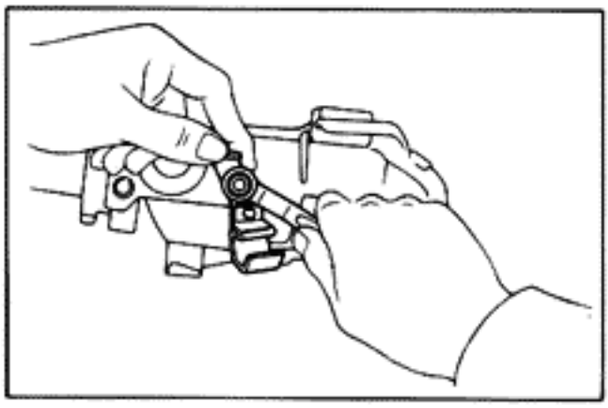

5. INSTALL TILT STEERING SUPPORT STOPPER BOLT

(a) Install the stopper bolt, bracket, washer and nut.

(b) Tighten the nut by holding the bracket with your fingers as shown.

Torque: 100 kg-cm (7 ft-lb, 10 N·m)

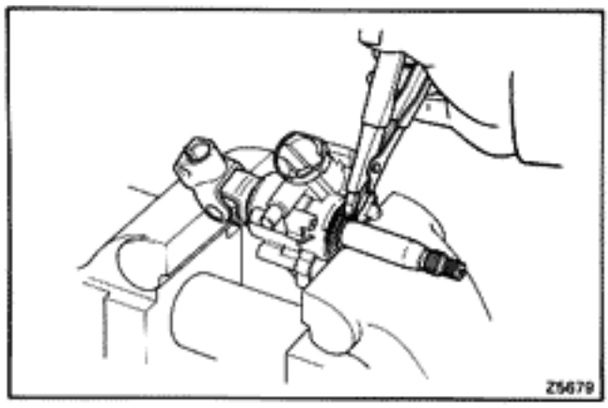

6. ASSEMBLE MAIN SHAFT AND UPPER BRACKET

(a) Assemble the collar, spring and main shaft, and insert them into the bracket.

(b) Using a soft jaw vise and snap ring pliers, install a new snap ring by pressing the main shaft and upper bearing.

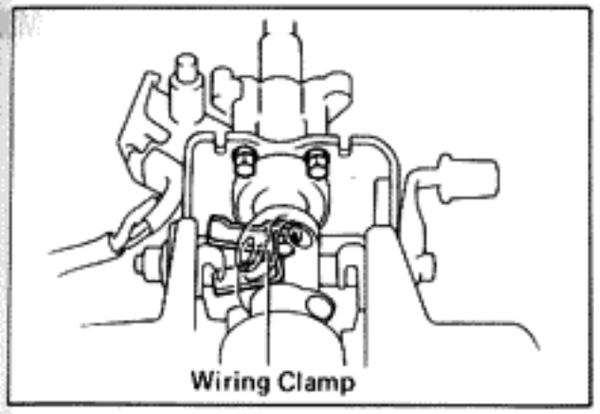

7. ASSEMBLE UPPER BRACKET AND SUPPORT

(a) Apply anaerobic adhesive and sealant [THREE BOND 1324 (Part No. 08833-00070) or equivalent] to 1 or 2 threads of the bolt end.

NOTE: This adhesive will not harden while exposed to air. It will act as a sealer or binding agent only when applied between of threads, etc. and air is cut off.

(b) Install the two bolts; one with a wiring clamp.

Torque: 75 kg-cm (65 in.-lb, 7.4 N·m)

(c) Install the support reinforcement.

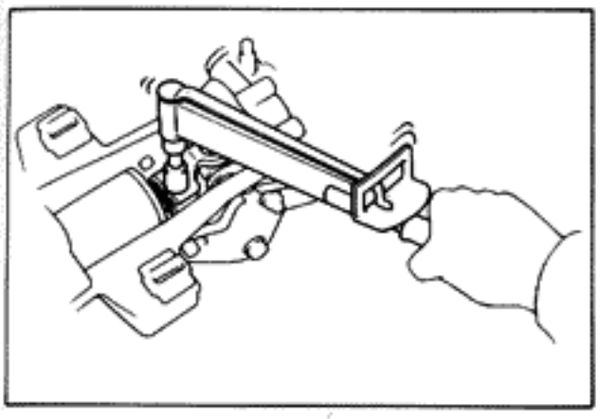

8. ASSEMBLE COLUMN BRACKET TO COLUMN TUBE

Torque: 185 kg-cm (13 ft-lb, 18 N·m)

9. CONNECT MAIN SHAFT AND INTERMEDIATE SHAFT

Align the marks on the joint flange and intermediate shaft and tighten the bolt.

Torque: 250 kg-cm (18 ft-lb, 25 N·m)

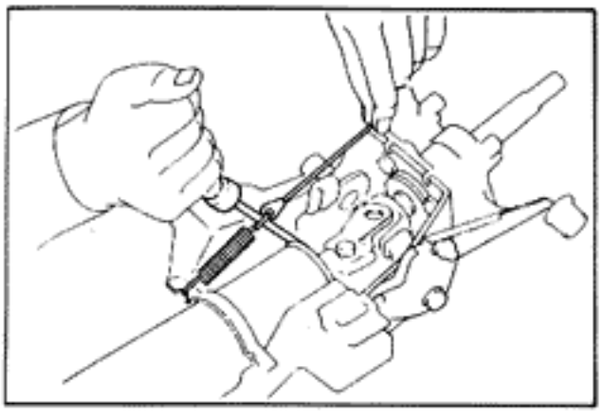

10. INSTALL TWO SPRINGS AND TWO CORDS

(a) Connect the tension spring and cord, and hook the spring to the hanger.

(b) Pry the spring end and hook the cord end to the support.

(c) Hook the cords to the cord guides.

11. CHECK OPERATION OF TILT STEERING LEVER AND SUPPORT

(a) Check that there is no axial or horizontal play at the end of the main shaft.

(b) Check that the main shaft lock securely in all six positions.

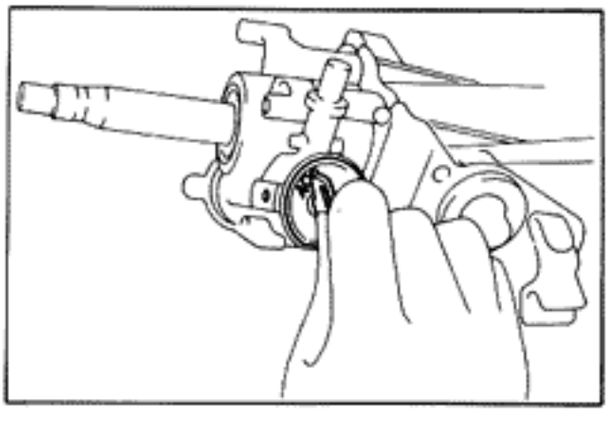

12. INSTALL IGNITION SWITCH

Turn the ignition key plate to the ACC position, and install the key cylinder into the upper bracket.

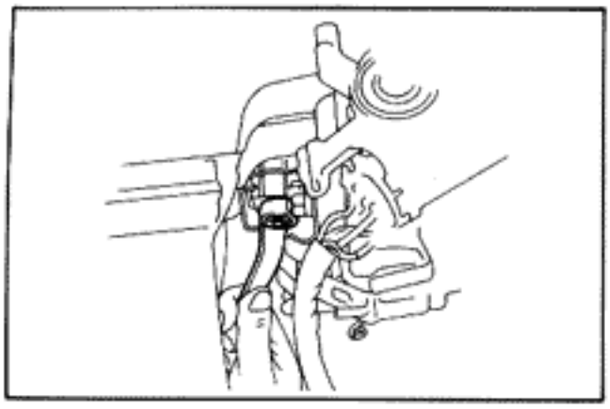

INSTALLATION OF STEERING COLUMN ASSEMBLY

(See page SR-3)

1. PLACE COLUMN AND SHAFT IN INSTALLED POSITION

2. INSTALL COLUMN BRACKET MOUNTING NUTS BY HAND

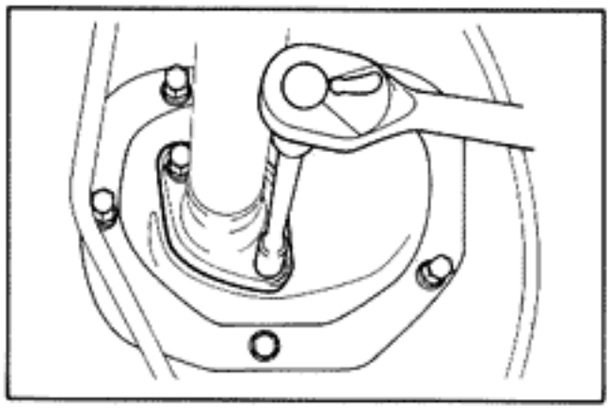

3. INSTALL STEERING COLUMN HOLE COVER PLATE

   Tighten the bolts.

   Torque: 130 kg-cm (9 ft-lb, 13 N·m)

4. TORQUE TWO COLUMN BRACKET MOUNTING NUTS

   Torque: 250 kg-cm (18 ft-lb, 25 N·m)

5. INSTALL COMBINATION SWITCH AND COLUMN COVER

6. INSTALL AIR DUCT AND INSTRUMENT LOWER PANEL

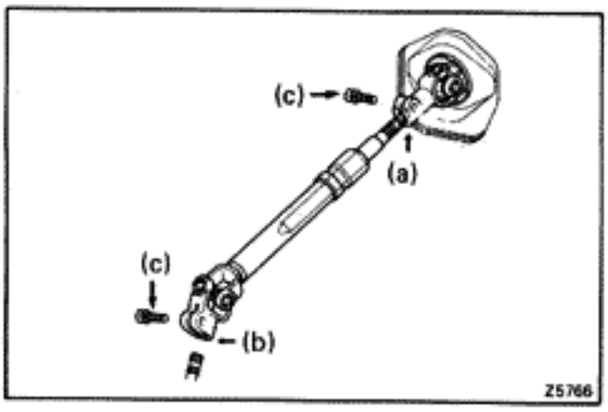

7. INSTALL INTERMEDIATE SHAFT
   (a) Install the column side first.
   (b) Install the rack housing side.
   (c) Install the two bolts and torque them.

   Torque: 350 kg-cm (25 ft-lb, 34 N·m)

8. CONNECT NEGATIVE CABLE TO BATTERY

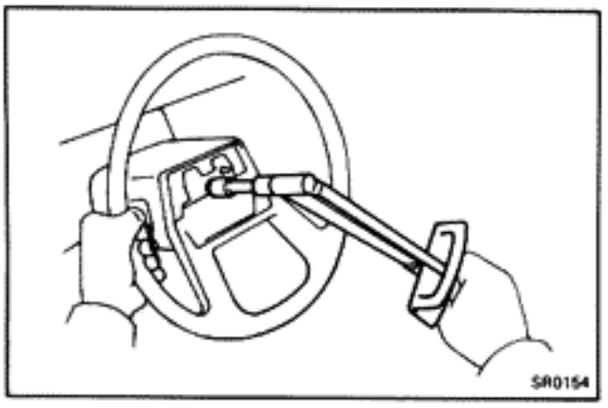

9. INSTALL STEERING WHEEL
   (a) Position the front wheels straight ahead and install the steering wheel in the neutral position.
   (b) Tighten the nut.

   Torque: 350 kg-cm (25 ft-lb, 34 N·m)

   (c) Install the steering wheel pad.

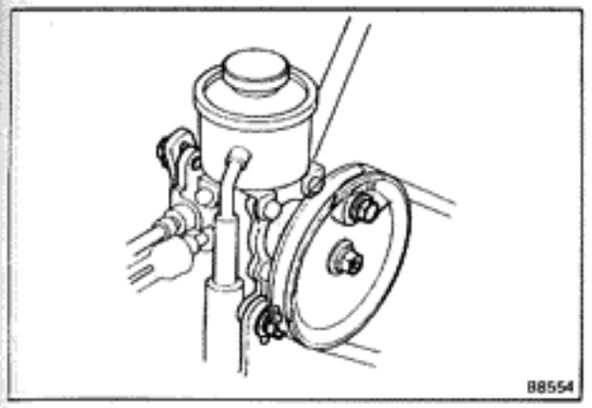

POWER STEERING

On-Vehicle Inspection

CHECKING DRIVE BELT TENSION

Using a belt tension gauge, check the drive belt tension.

Belt tension gauge:

Nippondenso BTG-20 (95506-00020) or
Borroughs No. BT-33-73F

Drive belt tension:

New belt	**125 ± 25 lb**
Used belt	**80 ± 20 lb**

NOTE:

- "New belt" refers to a brand new belt which has never before been used.
- "Used belt" refers to a belt which has been used on a running engine for 5 minutes or more.

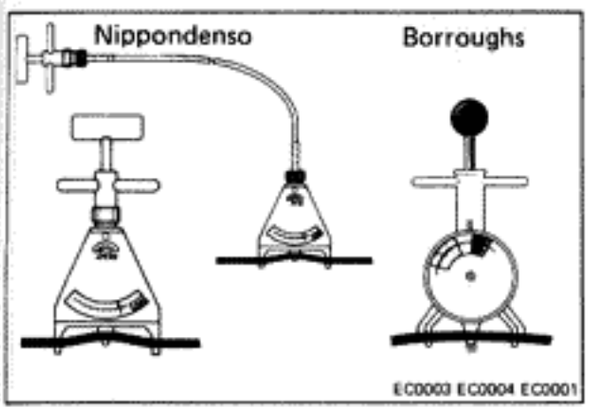

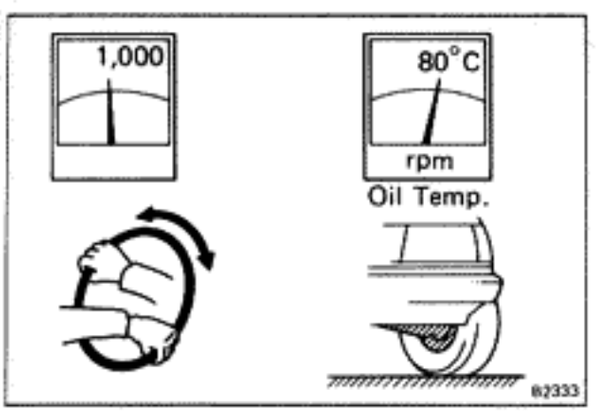

FLUID LEVEL CHECK

1. **KEEP VEHICLE LEVEL**
2. **BOOST FLUID TEMPERATURE**

With the engine idling at 1,000 rpm or less, turn the steering wheel from lock to lock several times to boost the fluid temperature.

Fluid temperature: 80°C (176°F)

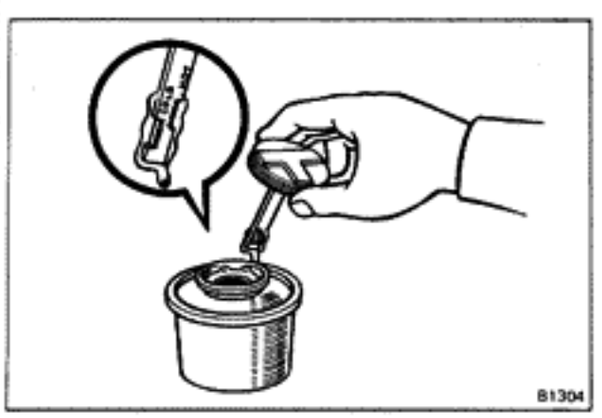

3. **CHECK FOR FOAMING OR EMULSIFICATION**

NOTE: Foaming and emulsification indicate the existence of air in the system or that the fluid level is too low.

4. **CHECK FLUID LEVEL IN RESERVOIR TANK**

Check the fluid level and add fluid if necessary.

Fluid: ATF DEXRON® or DEXRON® II

NOTE: Check that the fluid level is within the HOT LEVEL of the dipstick. If the fluid is cold, check that it is within the COLD LEVEL of the dipstick.

CHECK IDLE-UP

1. **WARM UP ENGINE**
2. **TURN AIR CONDITIONER SWITCH OFF**
3. **CHECK IDLE-UP**
   (a) Fully turn the steering wheel.
   (b) Check that the engine rpm is decrease when the air control valve hose is pinched.
   (c) Check that the engine rpm is increase when the air control valve hose is released.

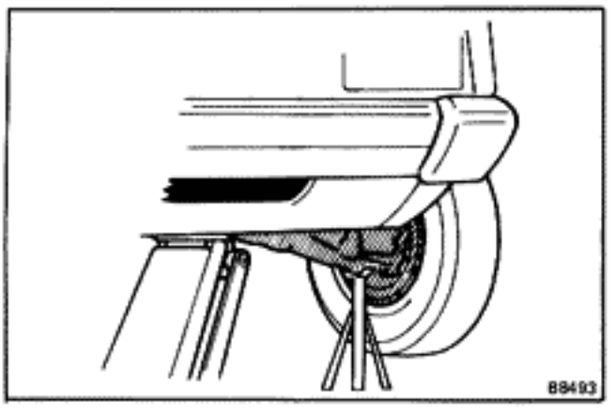

REPLACEMENT OF POWER STEERING FLUID

1. JACK UP FRONT OF VEHICLE AND SUPPORT IT WITH STANDS

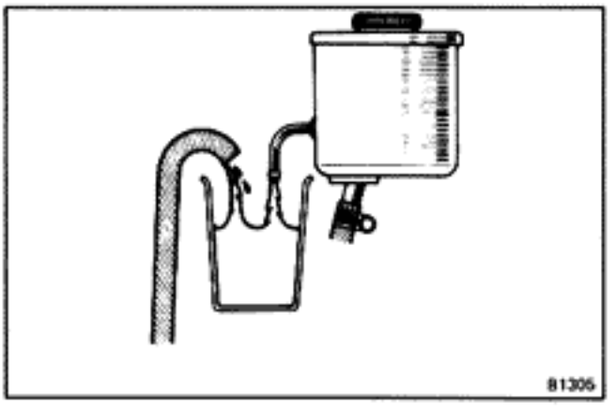

2. REMOVE FLUID RETURN HOSE FROM RESERVOIR TANK AND DRAIN FLUID INTO A CONTAINER

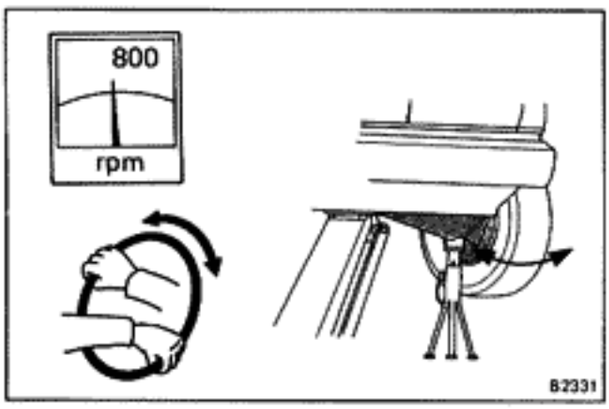

3. WITH ENGINE IDLING, TURN STEERING WHEEL FROM LOCK TO LOCK WHILE DRAINING FLUID
4. STOP ENGINE

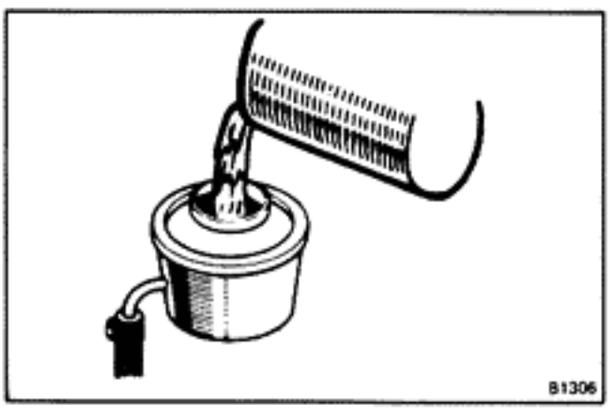

5. FILL RESERVOIR WITH FRESH FLUID
   Fluid: ATF DEXRON® or DEXRON® II

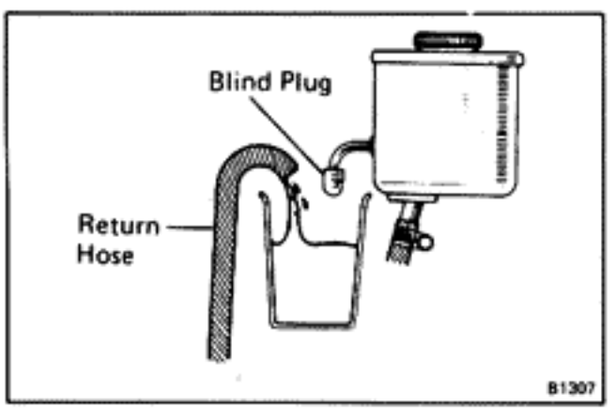

6. START ENGINE AND RUN IT AT 1,000 RPM
   After 1 or 2 seconds, fluid will begin to discharge from the return hose. Stop the engine immediately at this time.
7. REPEAT STEPS 5 AND 6 FOUR OR FIVE TIMES
8. CONNECT RETURN HOSE TO RESERVOIR TANK
9. BLEED POWER STEERING SYSTEM

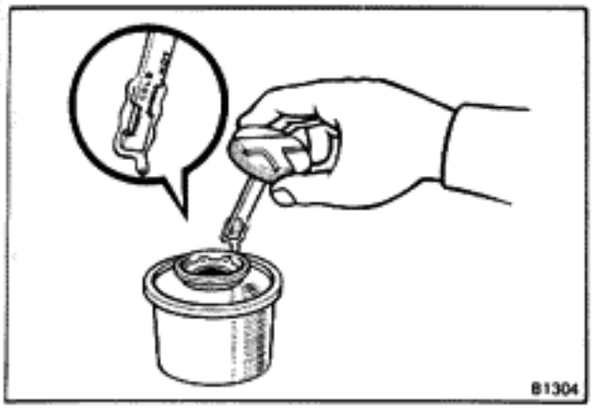

Bleeding of Power Steering System

1. CHECK FLUID LEVEL IN RESERVOIR

Check the fluid level and add fluid if necessary.

Fluid: ATF DEXRON® or DEXRON® II

NOTE: Check that the fluid level is within the HOT LEVEL of the dipstick. If the fluid is cold, check that it is within the COLD LEVEL of the dipstick.

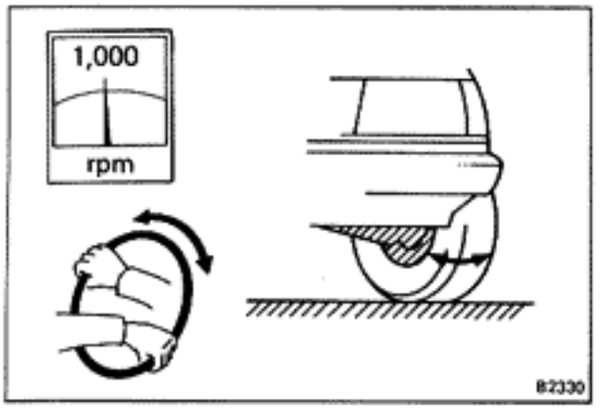

2. START ENGINE AND TURN STEERING WHEEL FROM LOCK TO LOCK THREE OR FOUR TIMES

Run the engine at 1,000 rpm or less.

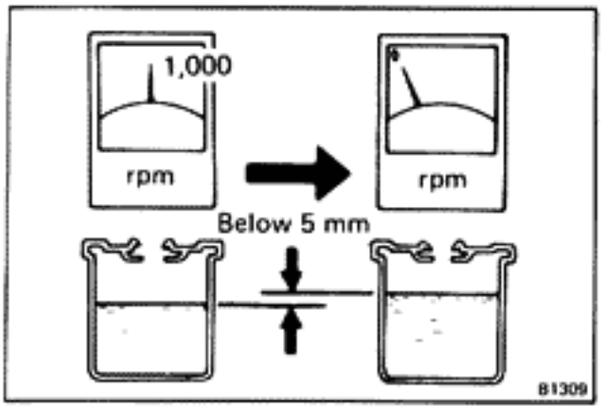

3. CHECK THAT FLUID IN RESERVOIR IS NOT FOAMY OR CLOUDY AND DOES NOT RISE OVER MAXIMUM WHEN ENGINE IS STOPPED

Measure the fluid level with the engine running. Stop the engine and measure the fluid level.

Maximum rise: 5 mm (0.20 in.)

If a problem is found, repeat steps 1 and 2. Repair the PS pump if the problem persists.

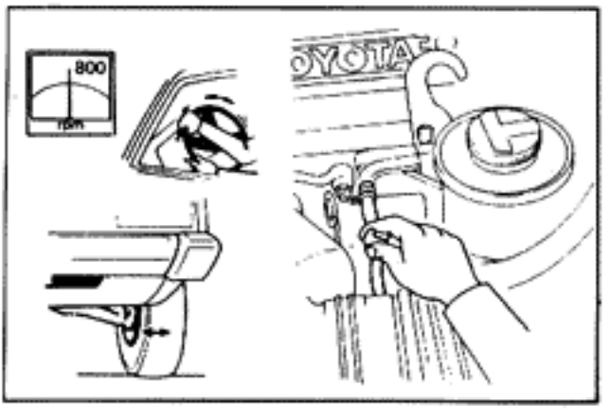

CHECK OF AIR CONTROL VALVE

1. START ENGINE AND RUN IT AT IDLE

2. TURN STEERING WHEEL LEFT AND RIGHT

Check that the rpm does not decrease more than 50 rpm.

3. WHILE PINCHING AIR HOSE, TURN STEERING WHEEL LEFT AND RIGHT

Check that the rpm decreases about 200 rpm.

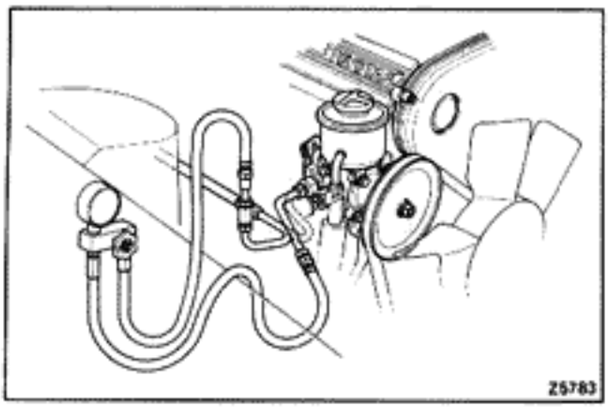

Oil Pressure Check

1. **CONNECT PRESSURE GAUGE**

   (a) Using SST, remove the pressure line from the PS pump.

   SST 09631-22020

   (b) Connect the gauge side of the pressure gauge to the PS pump.

   (c) Connect the valve side of the pressure gauge to the pressure line.

   (d) Bleed the system. Start the engine and turn the wheel fully in both directions two or three times.

   (e) Check that the fluid level is correct.

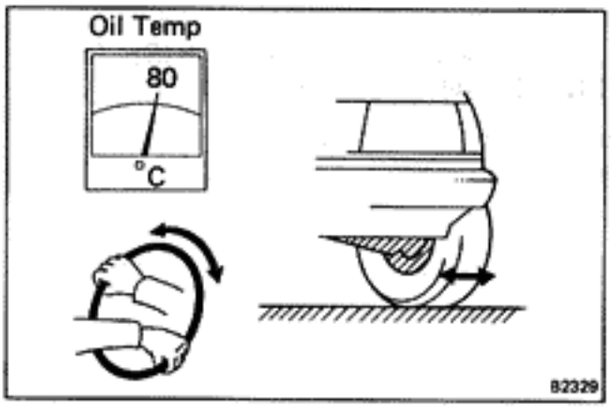

2. **CHECK THAT FLUID TEMPERATURE IS AT LEAST 80°C (176°F)**

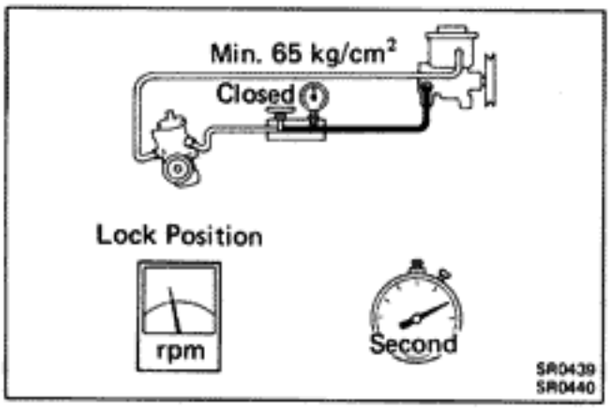

3. **START ENGINE AND RUN IT AT IDLE**

4. **CHECK FLUID PRESSURE READING WITH VALVE CLOSED**

   Close the pressure gauge valve and observe the reading on the gauge.

   Minimum pressure: 65 kg/cm² (924 psi, 6,374 kPa)

   NOTE: Do not keep the valve closed for more than 10 seconds.

   If pressure is low, repair or replace the PS pump.

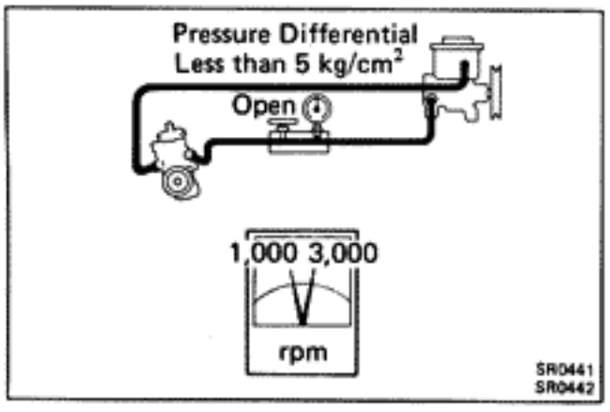

5. **OPEN VALVE FULLY**

6. **CHECK AND RECORD PRESSURE READING AT 1,000 RPM**

7. **CHECK AND RECORD PRESSURE READING AT 3,000 RPM**

   Check that there is less than 5 kg/cm² (71 psi, 490 kPa) difference in pressure between the 1,000 rpm and 3,000 rpm checks.

   If the difference is greater, repair or replace the PS pump flow control valve.

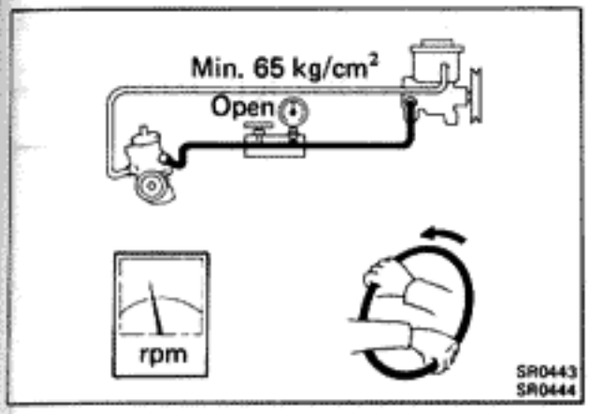

8. CHECK PRESSURE READING WITH STEERING WHEEL TURNED TO FULL LOCK

Be sure the pressure gauge valve is fully opened and the engine idling.

Minimum pressure: 65 kg/cm² (924 psi, 6,374 kPa)

If pressure is low, the gear housing has an internal leak and must be repaired or replaced.

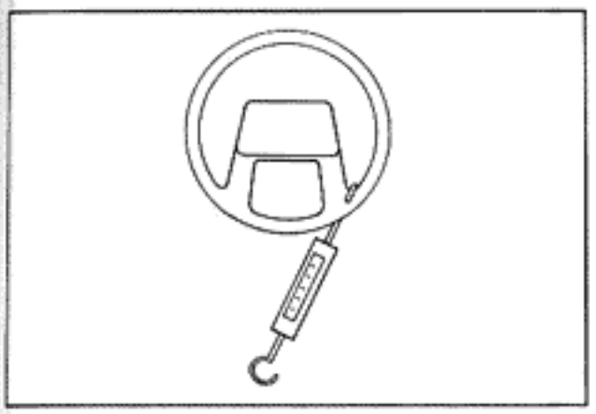

9. MEASURE STEERING EFFORT

Center the steering wheel and run the engine at idle.

Using a scale, measure the steering effort in both directions.

Maximum steering effort: 4 kg (8.8 lb, 39 N)

If steering effort is excessive, repair the power steering unit.

NOTE: Be sure to consider tire type, pressure and contact surface before making your diagnosis.

Power Steering Pump

REMOVAL OF POWER STEERING PUMP

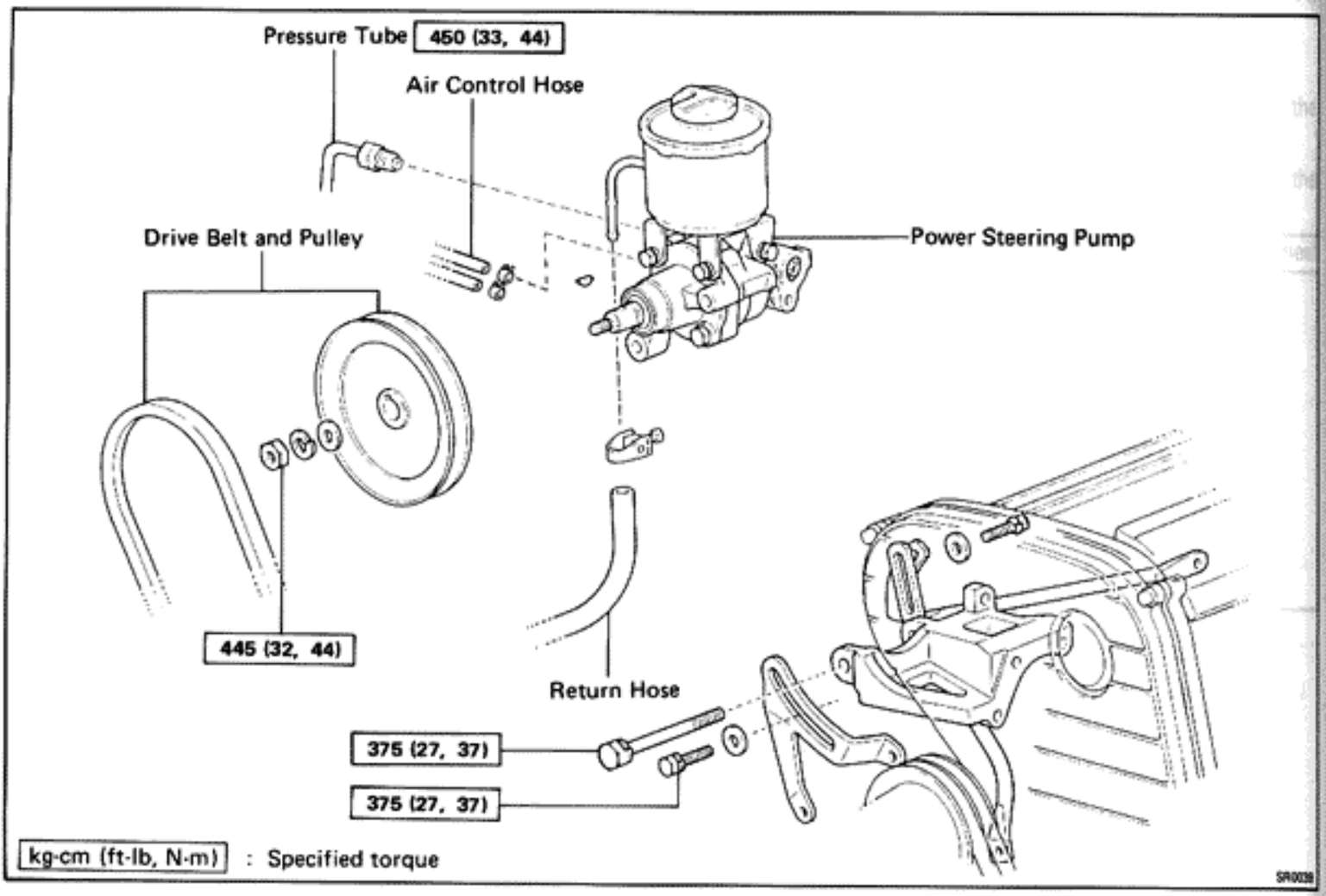

1. DISCONNECT AIR HOSES FROM AIR CONTROL VALVE

2. DRAIN FLUID FROM RESERVOIR TANK

3. DISCONNECT RETURN HOSE FROM RESERVOIR TANK

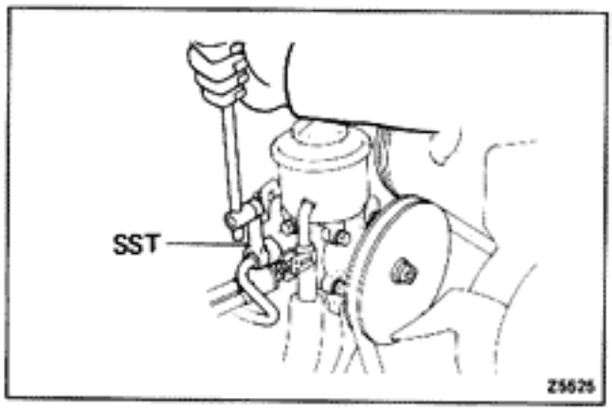

4. DISCONNECT PRESSURE TUBE FROM POWER STEERING PUMP

Using SST, loosen and disconnect the pressure tube.

SST 09631-22020

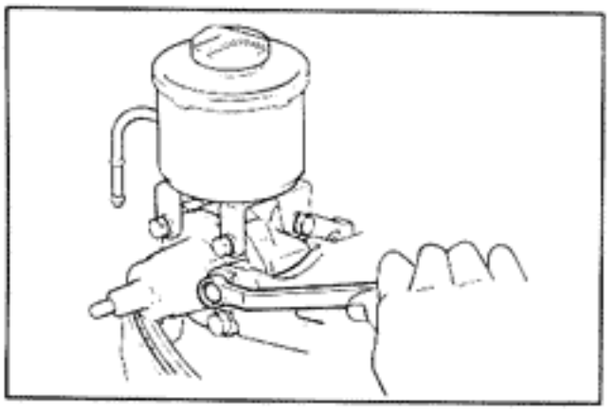

5. REMOVE DRIVE BELT AND PULLEY

(a) Push on the drive belt to hold the pulley in place and remove the pulley set nut.

(b) Remove the drive belt adjust bolt.

(c) Remove the PS pump rear mount bolt.

(d) Remove the drive belt.

(e) Remove the pulley and woodruff key.

6. REMOVE POWER STEERING PUMP

Remove the PS pump front mount bolt, and remove the PS pump.

COMPONENTS

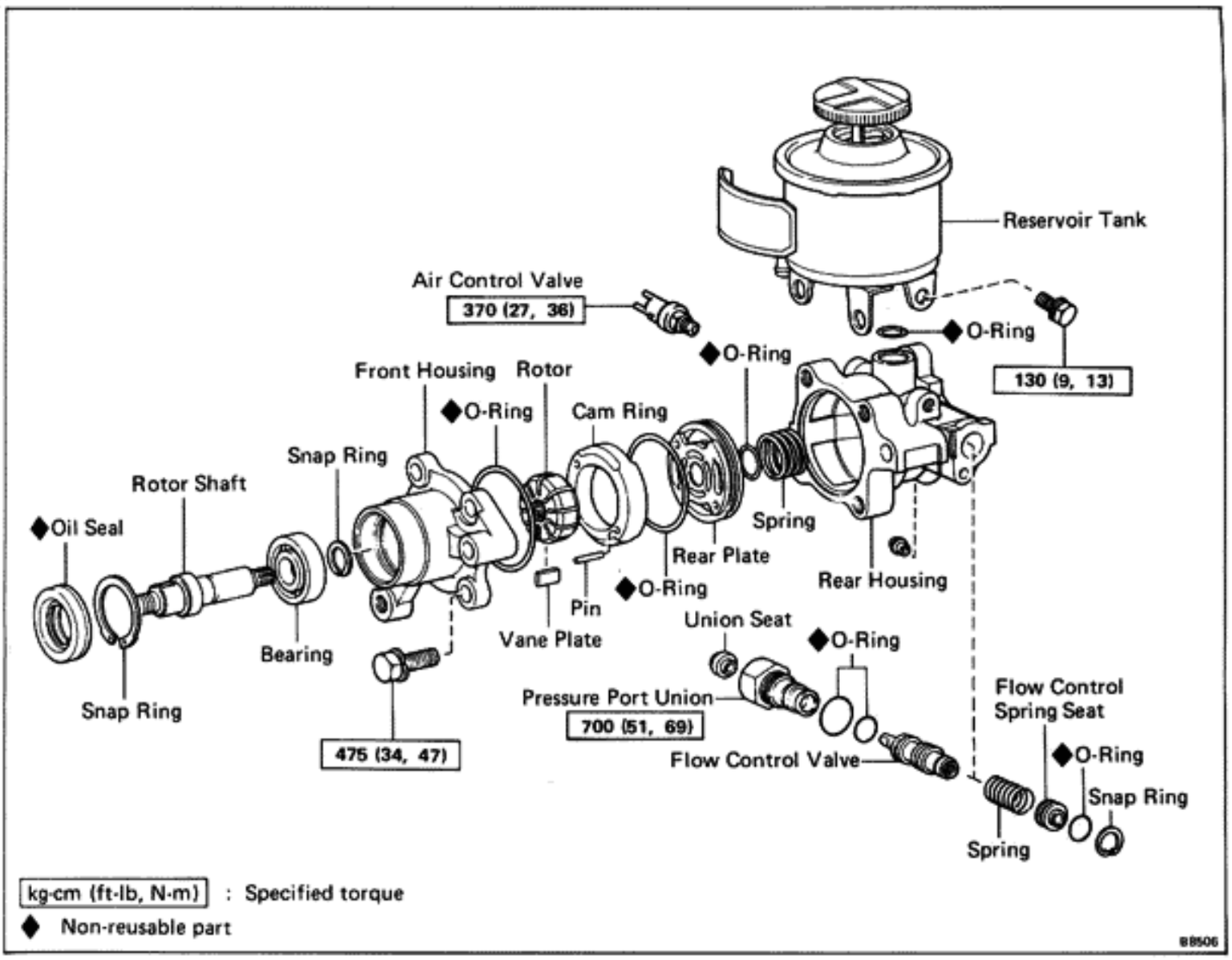

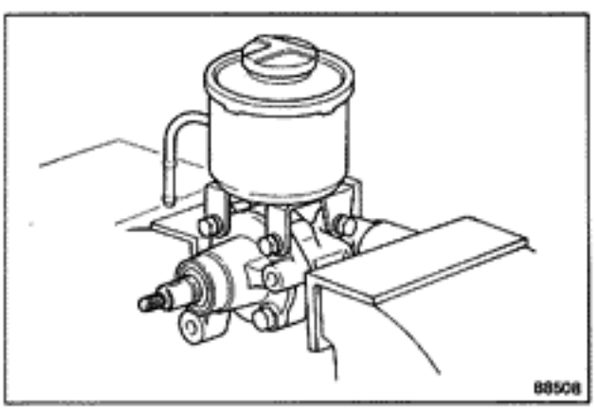

DISASSEMBLY OF POWER STEERING PUMP

1. **CLAMP POWER STEERING PUMP IN VISE**
   CAUTION: Do not tighten the vise too tight.
2. **REMOVE FRONT HOUSING SET BOLTS**
3. **REMOVE RESERVOIR TANK AND O-RING**
   Remove the two reservoir tank set bolts, reservoir tank and O-ring.

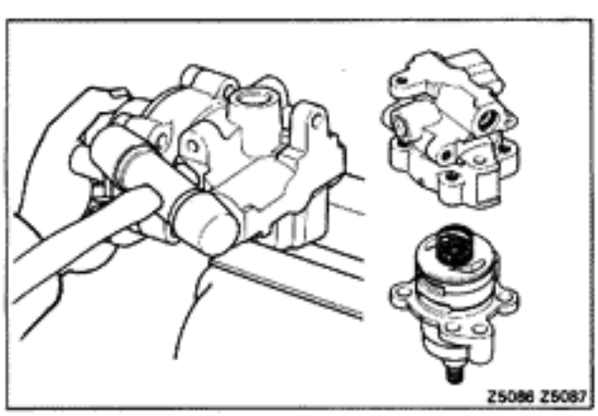

4. **REMOVE AIR CONTROL VALVE**
5. **MARK FRONT AND REAR HOUSING**
   Mark these parts to ensure correct reassembly.
6. **REMOVE FRONT HOUSING**
   Using a plastic hammer, tap off the front housing.
   CAUTION: Be careful that the vane plates, rotor and cam ring do not fall out.

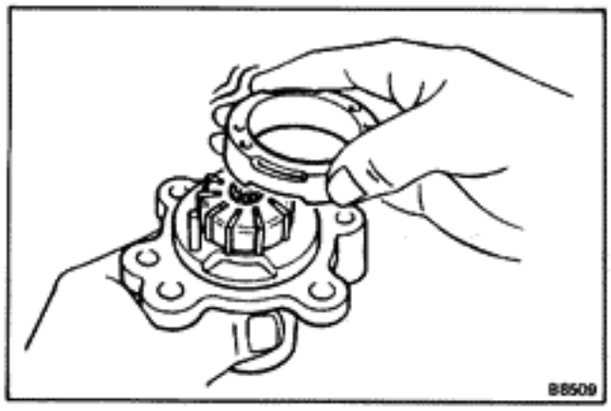

7. REMOVE CAM RING, ROTOR AND VANE PLATES

CAUTION: Be careful not to scratch the cam ring, rotor or vane plates.

8. REMOVE STRAIGHT PINS

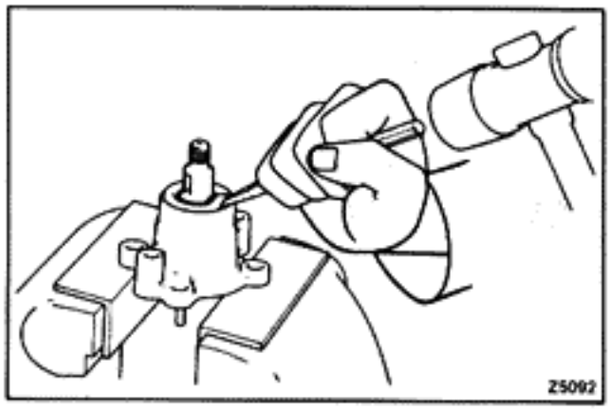

9. REMOVE ROTOR SHAFT

(a) Clamp the front housing in a vise.

CAUTION: Do not tighten the vise too tight.

(b) Using a chisel and hammer, pry off the oil seal.

(c) Using snap ring pliers, remove the snap ring.

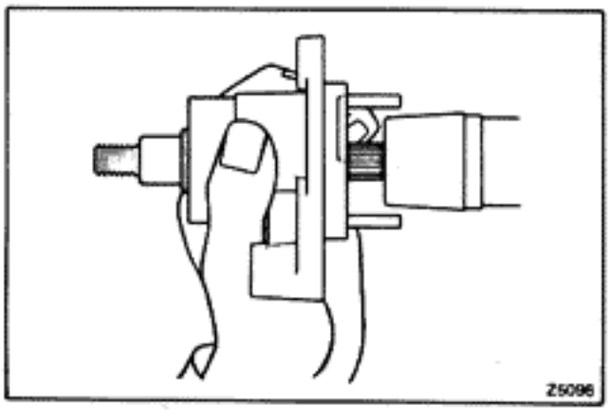

(d) Using a plastic hammer, lightly tap the rotor shaft out of the front housing.

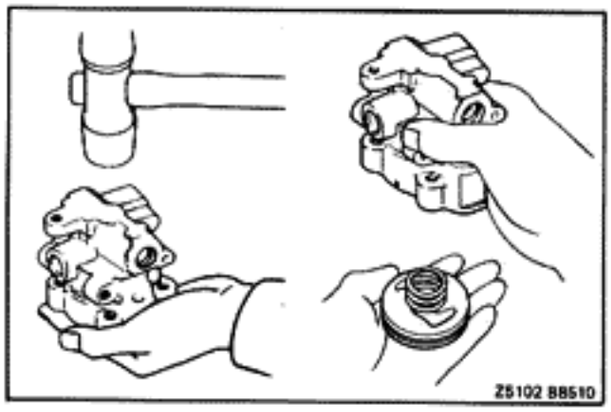

10. REMOVE REAR PLATE AND SPRING

Using a plastic hammer, tap the bottom end of the rear housing, and remove the rear plate and spring.

CAUTION: Avoid gripping the rear plate with pliers as this could damage it.

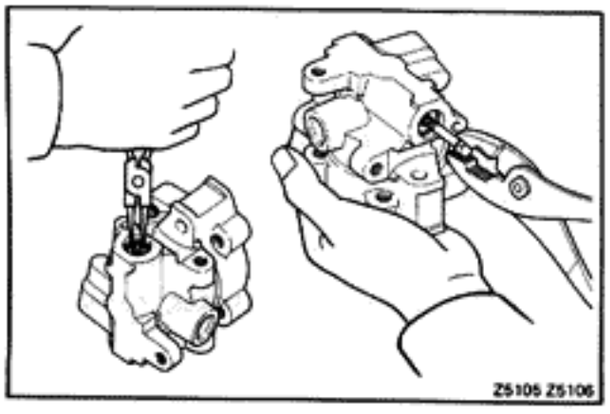

11. REMOVE PRESSURE PORT UNION

12. REMOVE FLOW CONTROL VALVE AND SPRING

CAUTION: Use care not drop, scratch or nick this valve.

13. REMOVE FLOW CONTROL SPRING SEAT

(a) Using snap ring pliers, remove the snap ring.

(b) Install a suitable bolt to the spring seat and pull it out.

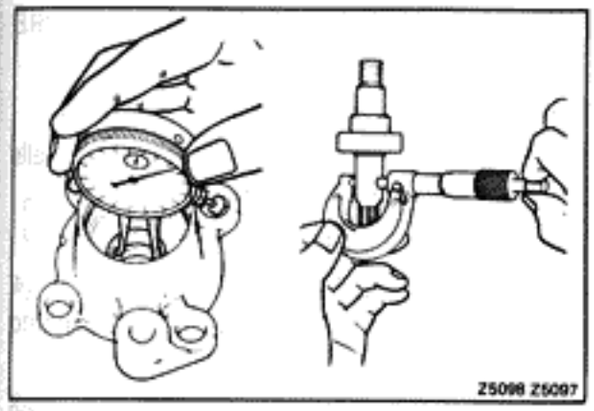

INSPECTION OF POWER STEERING PUMP

1. INSPECT BUSHING AND MEASURE BUSHING OIL CLEARANCE

(a) Check bushing for wear or damage. The bushing cannot be replaced separately.

If wear or damage is found, replace entire housing.

(b) Check the oil clearance between the bushing and rotor shaft.

Maximum oil clearance: 0.07 mm (0.0028 in.)

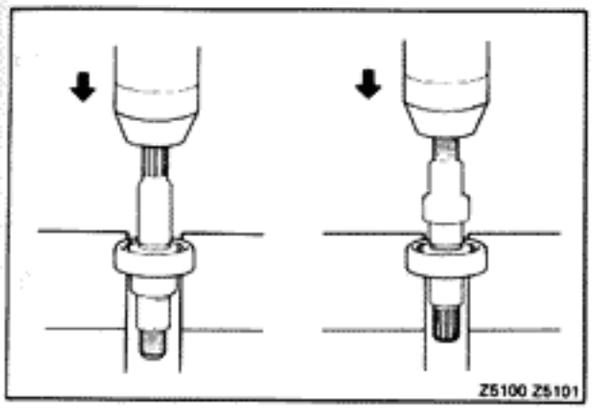

2. IF NECESSARY, REPLACE ROTOR SHAFT BEARING

(a) Using snap ring pliers, remove the snap ring.

(b) Using a press, press out the bearing.

(c) Using a press, press in the bearing.

(d) Using snap ring pliers, install the snap ring.

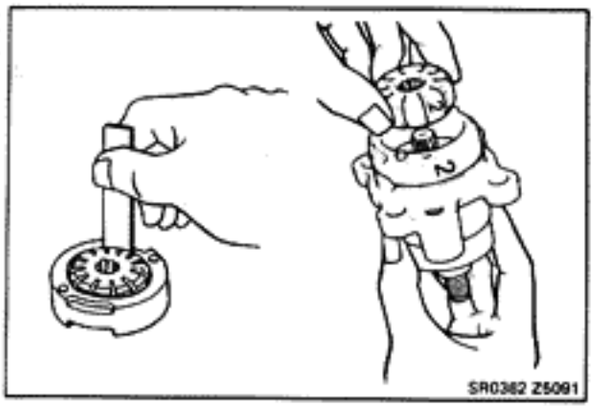

3. INSPECT ROTOR AND CAM RING

Measure the cam ring thickness. Check that the difference between the rotor and cam ring measurement is less than maximum.

Maximum difference: 0.06 mm (0.0024 in.)

If the difference is excessive, replace the cam ring with one stamped with the same letter on the rotor.

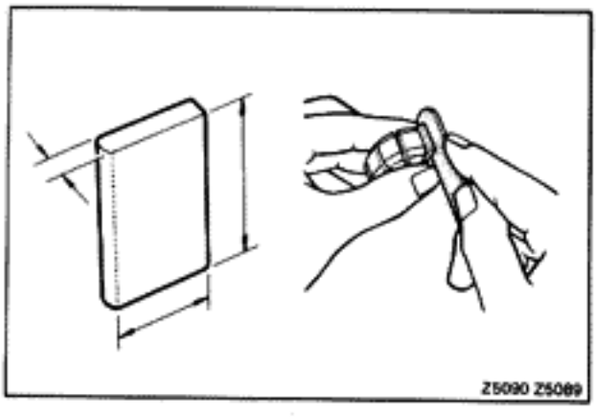

4. INSPECT AND MEASURE VANE PLATES

(a) Check the vane plates for wear or scratches.

(b) Measure the length, height and thickness of the vane plates.

Minimum length: 14.97 mm (0.5894 in.)
Minimum height: 7.8 mm (0.307 in.)
Minimum thickness: 1.7 mm (0.067 in.)

(c) Measure the clearance between the vane plate and rotor groove.

Maximum clearance: 0.06 mm (0.0024 in.)

NOTE: There are five vane lengths with the following rotor and cam ring marks:

Rotor and cam ring mark	Vane length mm (in.)
None	14.996 – 14.998 (0.5904 – 0.5905)
1	14.994 – 14.996 (0.5903 – 0.5904)
2	14.992 – 14.994 (0.5902 – 0.5903)
3	14.990 – 14.992 (0.59016 – 0.59024)
4	14.988 – 14.990 (0.5901 – 0.5902)

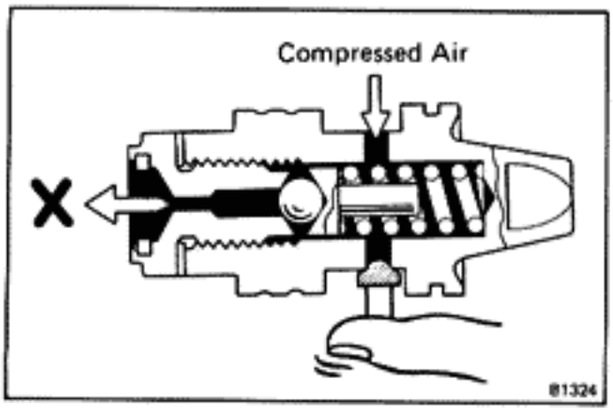

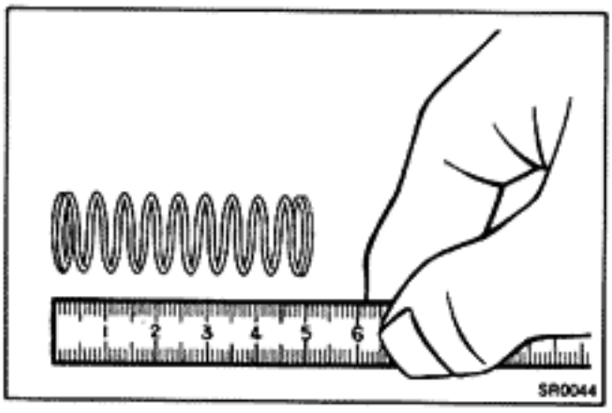

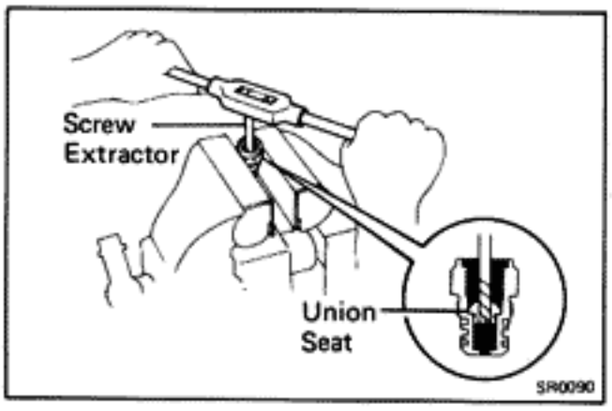

5. INSPECT FLOW CONTROL VALVE AND MEASURE SPRING

(a) Check the flow control valve for wear or damage.

(b) Apply fluid to the valve and check that it falls smoothly into the valve hole by its own weight.

(c) Check the flow control valve for leakage.

- Close one of the holes and apply compressed air [4 or 5 kg/cm² (57 or 71 psi, 392 or 490 kPa)] into the opposite side.
- Confirm that air does not come out from the end hole.

If necessary, replace the valve with one stamped with the same letter on the rear housing.

(d) Check that the spring is within specification.

Standard length 50.0 mm (1.969 in.)
Minimum length 47.0 mm (1.850 in.)

If the spring is not within specification, replace the spring.

6. IF NECESSARY REPLACE UNION SEAT

(a) Using a screw extractor wrench, remove the union seat.

(b) Install a new floating type union seat.

NOTE: Only floating type parts are available.

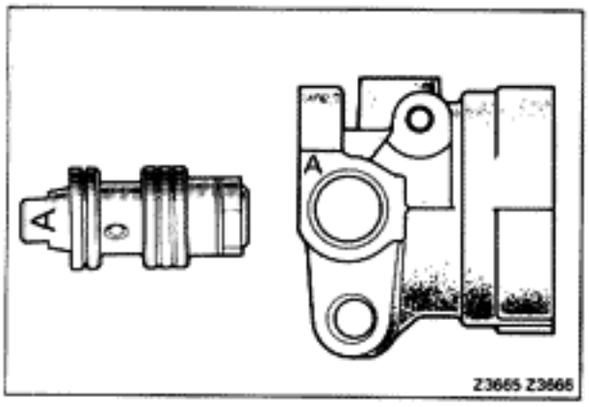

ASSEMBLY OF POWER STEERING PUMP

(See page SR-19)

1. INSTALL SPRING AND FLOW CONTROL VALVE

NOTE: Be sure the letter inscribed on the flow control valve matches the letter stamped on the rear of the pump body.

Inscribed mark: A, B, C, D, E or F

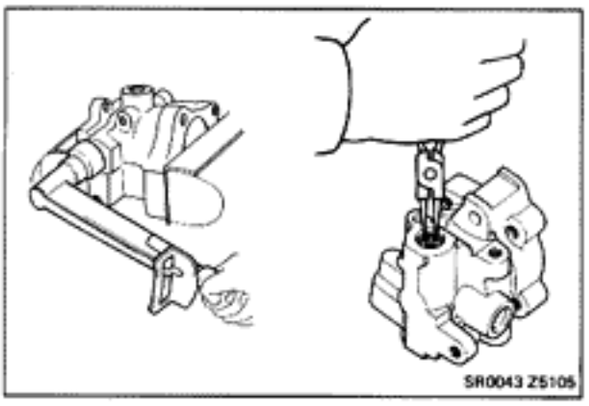

2. INSTALL PRESSURE PORT UNION

Install and torque the union.

Torque: 700 kg-cm (51 ft-lb, 69 N·m)

3. INSTALL FLOW CONTROL SPRING SEAT

(a) Temporarily install a suitable bolt to the spring seat.

(b) Push in the bolt and install the snap ring with snap ring pliers.

(c) Remove the suitable bolt.

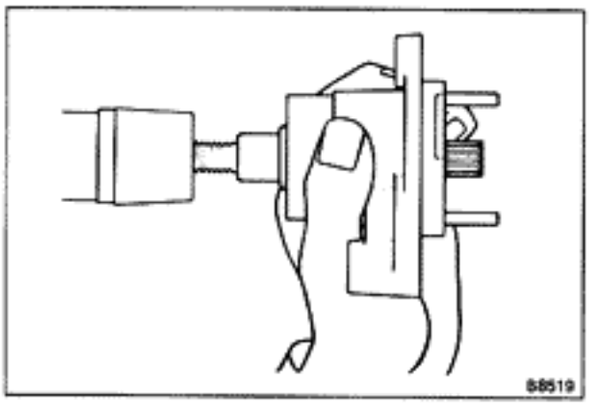

4. INSTALL ROTOR SHAFT TO FRONT HOUSING

Install the rotor shaft into the front housing by tapping it in with a plastic hammer.

5. INSTALL SNAP RING

Using snap ring pliers, install the snap ring to the front housing.

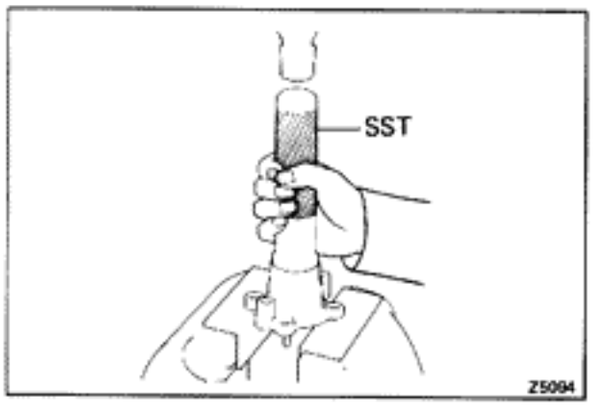

6. INSTALL OIL SEAL

(a) Apply a light coat of MP grease to a new oil seal lip.

(b) Using SST and a hammer, install the oil seal.

SST 09608-30012 (09608-04030)

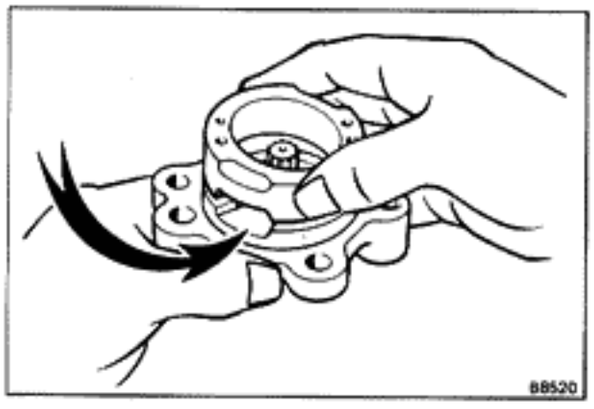

7. INSTALL O-RING

8. INSTALL STRAIGHT PINS

9. INSTALL CAM RING

Align the fluid passages of the cam ring and front housing, and install the cam ring.

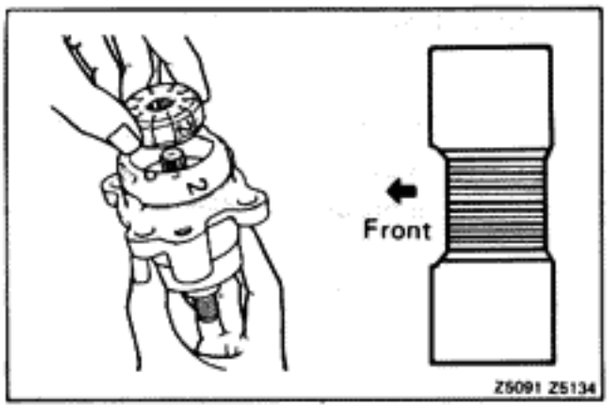

10. INSTALL ROTOR

Install the rotor with the chamfered end facing toward the front.

NOTE: Be sure the letters inscribed on the cam ring and rotor are matching.

Inscribed mark: 1, 2, 3, 4 or None

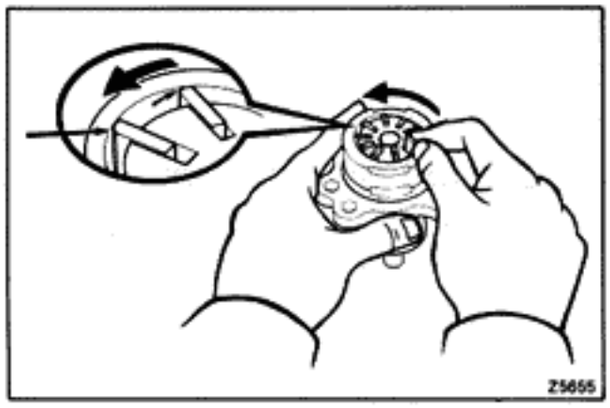

11. INSTALL VANE PLATES

Install the vane plates with the round end facing outward.

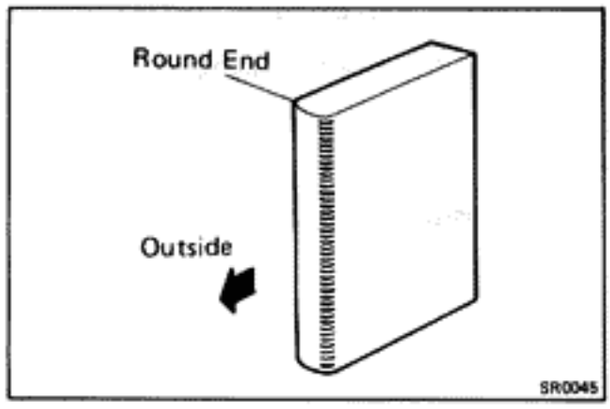

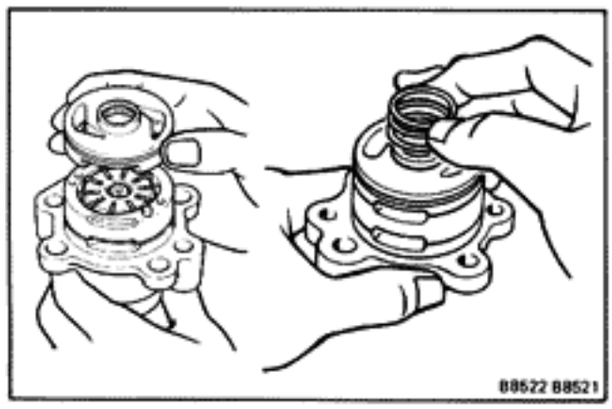

12. INSTALL REAR PLATE AND SPRING

(a) Place the rear plate on the cam ring with the pin holes aligned with the pins.

(b) Place the spring on the rear plate.

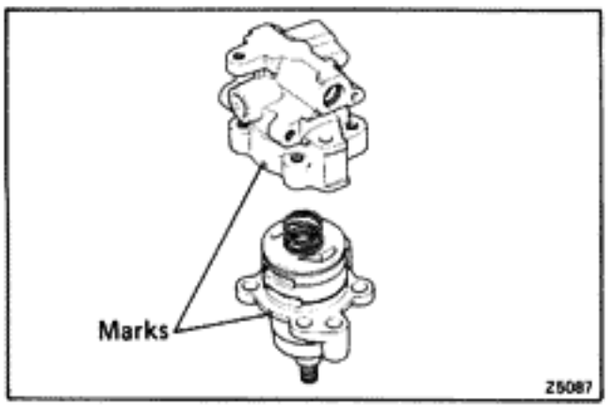

13. INSTALL REAR HOUSING

(a) Align the marks on the front and rear housing, and assemble them.

(b) Install the reservoir tank in place and tighten the reservoir tank set bolts.

(c) Finger tighten the front and rear housing mounting bolts.

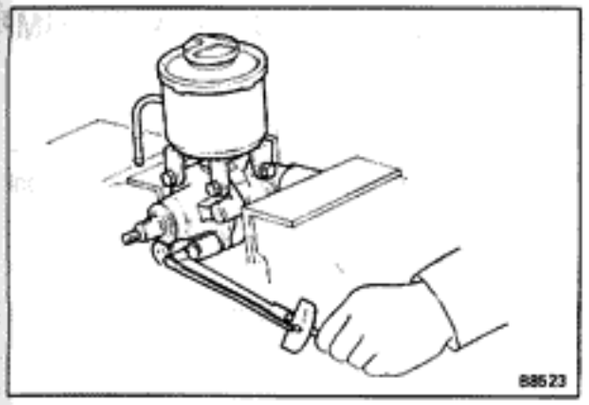

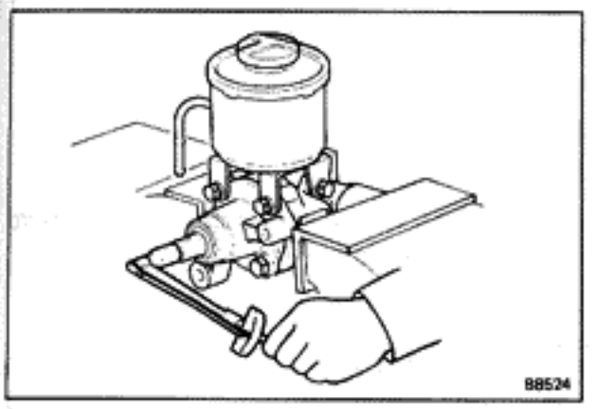

14. TIGHTEN FOUR HOUSING BOLTS

(a) Clamp the rear housing in a vise.

CAUTION: Do not tighten the vise too tight.

(b) Tighten the four housing bolts evenly in 3 or 4 passes.

Torque: 475 kg-cm (34 ft-lb, 47 N·m)

15. INSTALL RESERVOIR TANK

Install and torque the bolts.

Torque: 130 kg-cm (9 ft-lb, 13 N·m)

16. CHECK ROTOR SHAFT ROTATION CONDITION

(a) Check that the rotor shaft rotates smoothly without abnormal noise.

(b) Provisionally install the pulley nut and check the rotating torque.

Rotating torque: Less than 2.8 kg-cm (2.4 in.-lb, 0.3 N·m)

17. INSTALL AIR CONTROL VALVE

Torque: 370 kg-cm (27 ft-lb, 36 N·m)

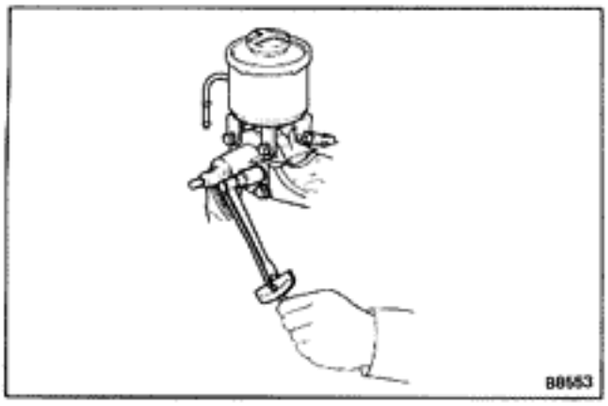

INSTALLATION OF POWER STEERING PUMP

(See page SR-18)

1. INSTALL POWER STEERING PUMP

(a) Place the PS pump in position and torque the front mount bolt.

Torque: 375 kg-cm (27 ft-lb, 37 N·m)

(b) Install the drive belt adjust bolt by hand.

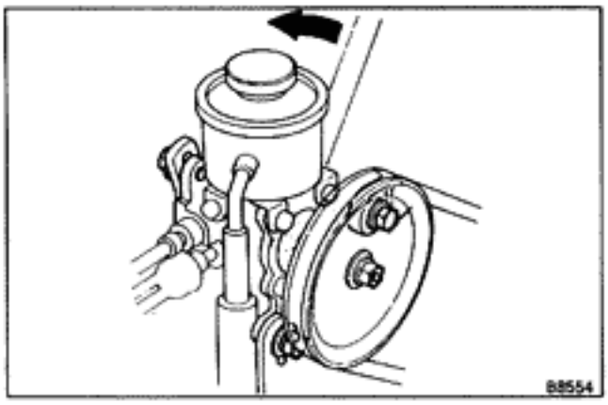

2. INSTALL PULLEY AND DRIVE BELT

(a) Install the woodruff key and pulley.

(b) Install the pulley set nut.

(c) Install the drive belt.

(d) Insert a bar under the PS pump and ply it upward until the belt tension is at specified value.

Belt tension gauge:
Nippondenso BTG-20 (95506-00020) or
Borroughs No. BT-33-73F

Drive belt tension:
New belt 125 ± 25 lb
Used belt 80 ± 20 lb

NOTE:
- "New belt" refers to a brand new belt which has never before been used.
- "Used belt" refers to a belt which has been used on a running engine for 5 minutes or more.

(e) Torque the adjust bolt.

Torque: 375 kg-cm (27 ft-lb, 37 N·m)

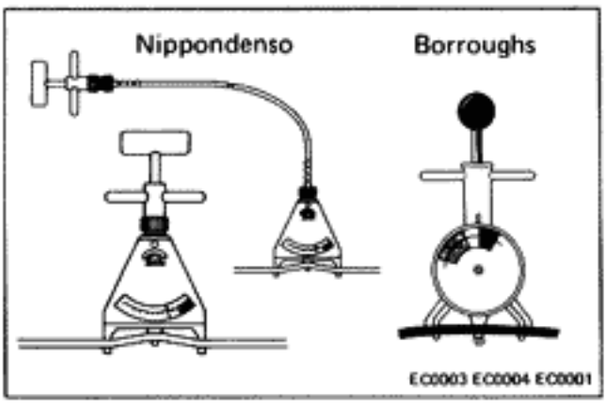

(f) Push down on the drive belt to hold the pulley in place and torque the pulley set nut.

Torque: 445 kg-cm (32 ft-lb, 44 N·m)

(g) Install and torque the PS pump rear mount bolt.

Torque: 375 kg-cm (27 ft-lb, 37 N·m)

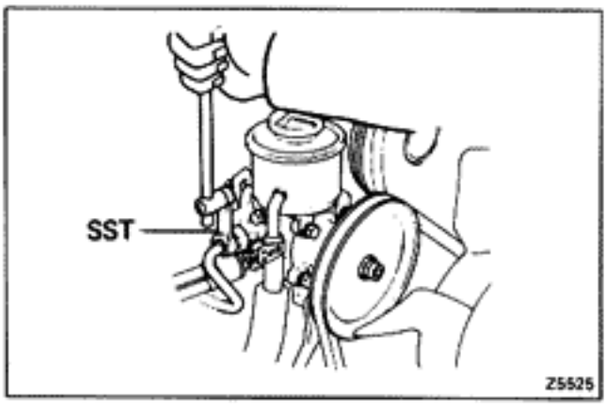

3. CONNECT PRESSURE TUBE TO POWER STEERING PUMP

Using SST, connect and torque the pressure tube.

SST 09631-22020

Torque: 450 kg-cm (33 ft-lb, 44 N·m)

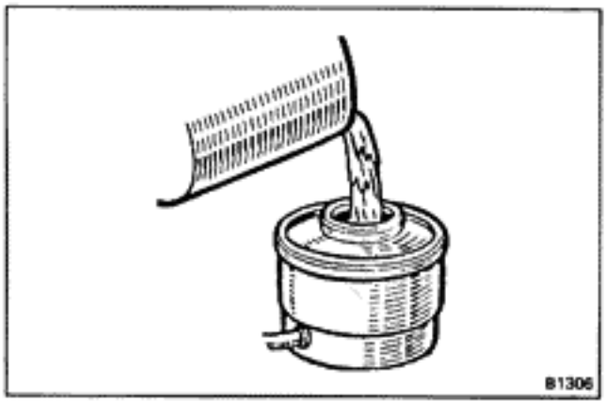

4. CONNECT RETURN HOSE TO RESERVOIR TANK

5. CONNECT AIR HOSES TO AIR CONTROL VALVE

6. FILL RESERVOIR WITH FLUID
Fluid: ATF DEXRON® or DEXRON® II

7. BLEED POWER STEERING

8. CHECK FOR FLUID LEAKS

Gear Housing

REMOVAL OF GEAR HOUSING

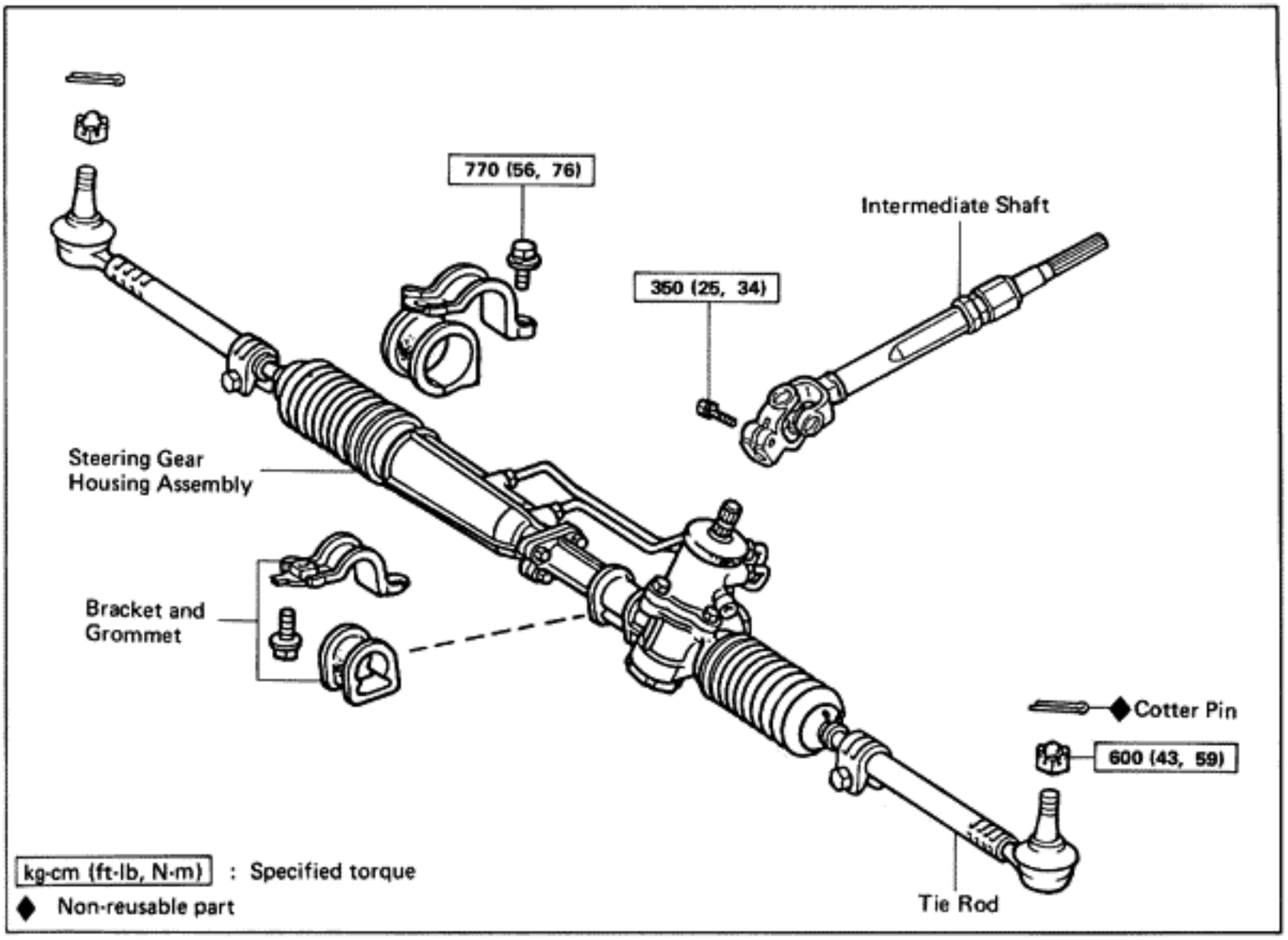

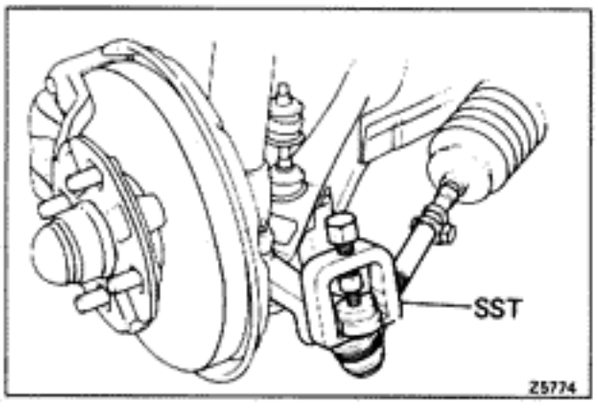

1. **REMOVE INTERMEDIATE SHAFT**
(See step 2 on page SR-4)

2. **DISCONNECT TIE ROD END**
   (a) Remove the cotter pin and nut holding the knuckle arm to the tie rod.
   (b) Using SST, disconnect the knuckle arm from the tie rod.

   SST 09611-22012

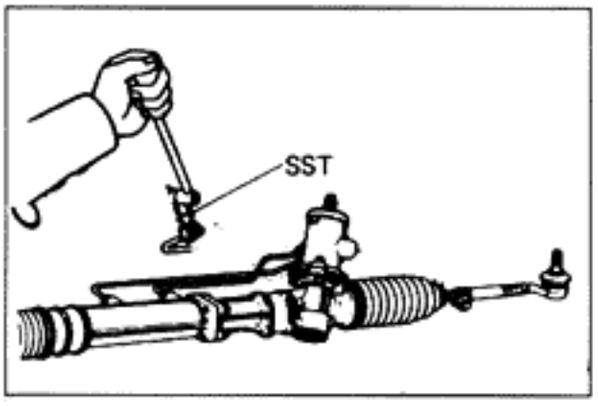

3. **DISCONNECT RETURN LINE AND PRESSURE LINE**
   Using SST, disconnect return and pressure lines. Use a container to catch the power steering fluid.

   SST 09631-22020

4. **REMOVE GEAR HOUSING ASSEMBLY**
   (a) Remove the gear housing bracket set bolts.
   (b) Remove the housing assembly.

COMPONENTS

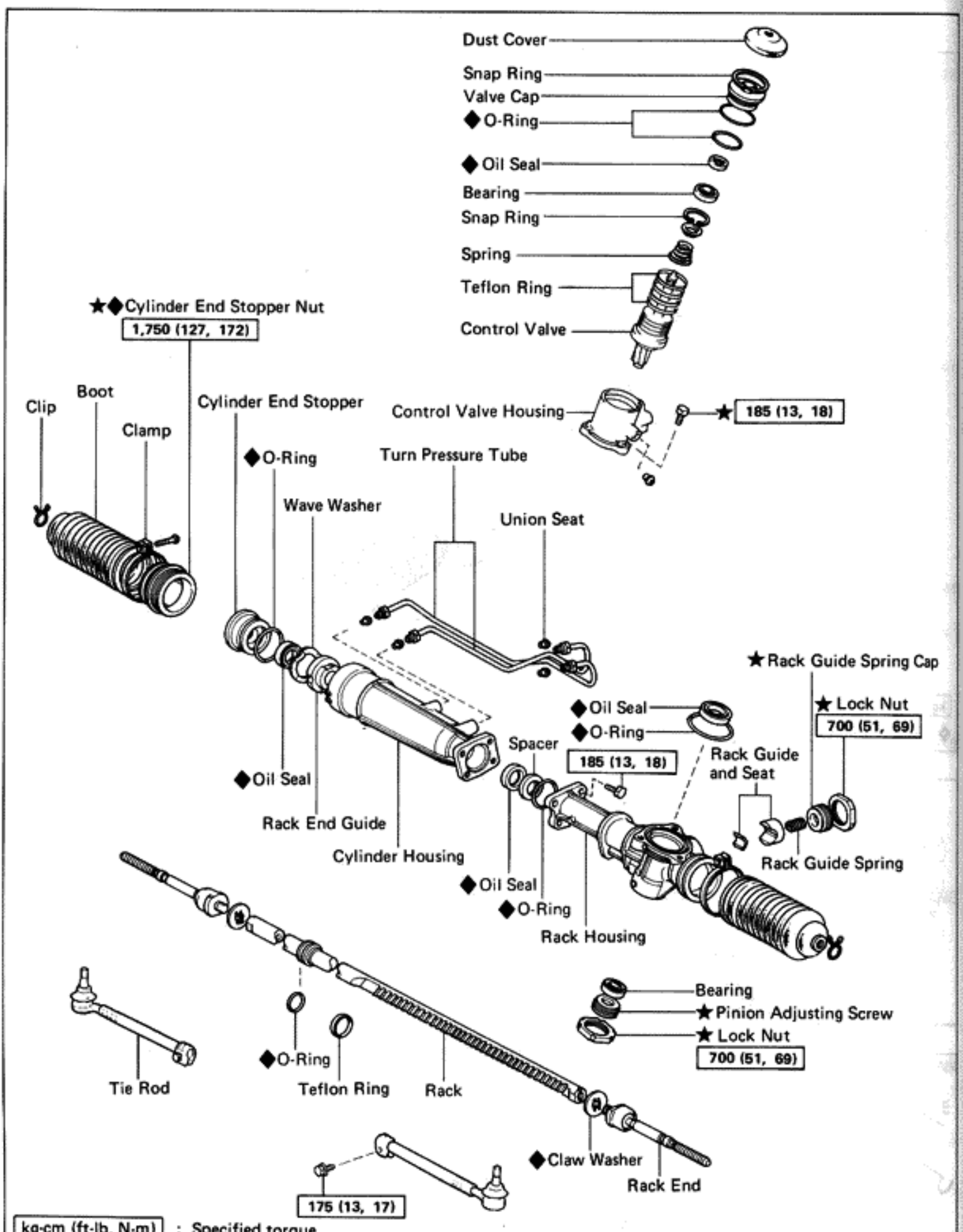

kg-cm (ft-lb, N-m) : Specified torque

◆ Non-reusable part

★ Precoated part

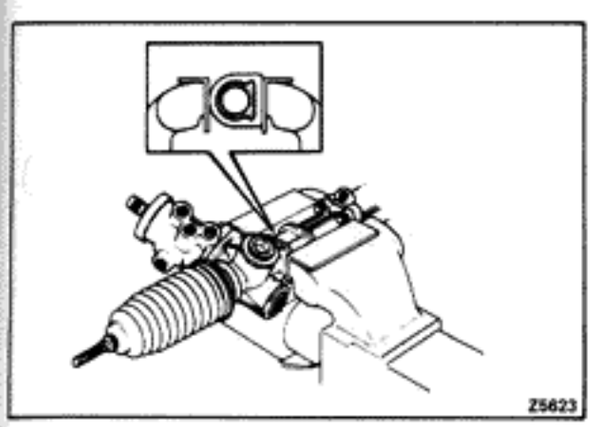

DISASSEMBLY OF GEAR HOUSING

(See page SR-27)

1. CLAMP GEAR HOUSING IN VISE

NOTE:

(1) The rack housing is made of aluminum, so always use soft jaws on the vise and clamp onto the part shown in the figure.

(2) If clamping onto the center tube, wrap a piece of cloth around it and be careful not to damage the tube.

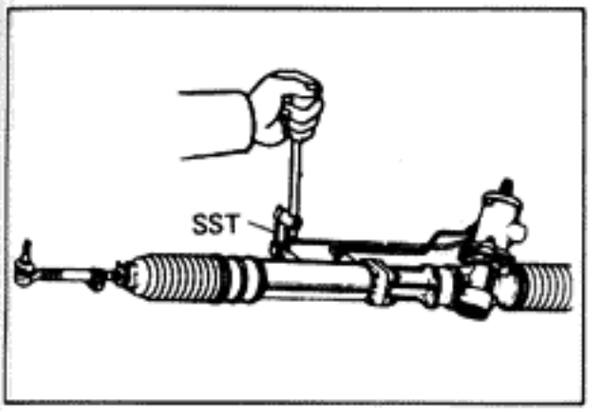

2. REMOVE TURN PRESSURE RIGHT AND LEFT TUBES AND UNION SEATS

(a) Using SST, remove the turn pressure tubes.

SST 09631-22020

(b) Remove the union seats.

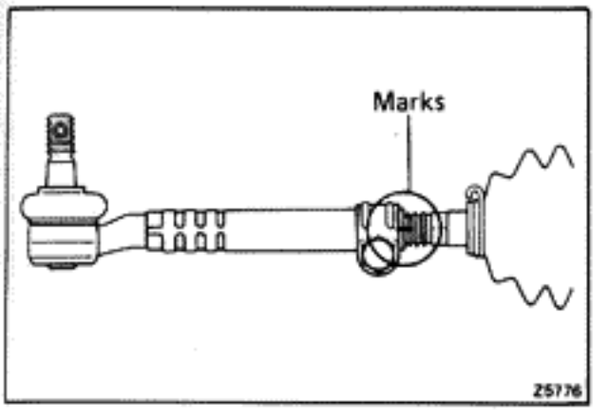

3. REMOVE TIE ROD ENDS

(a) Place matchmarks on the tie rod end and rack end.

(b) Loosen the clamp and remove the tie rod end from the rack end.

4. REMOVE RACK BOOTS

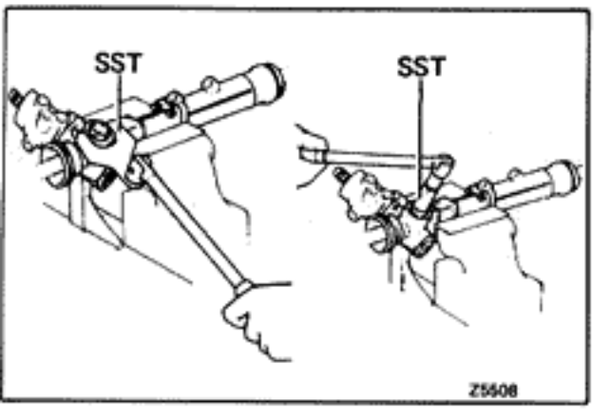

5. REMOVE RACK GUIDE SPRING CAP LOCK NUT

Using SST, remove the rack guide spring cap lock nut.

SST 09612-24012 (09617-24020)

6. REMOVE RACK GUIDE SPRING CAP

Using SST, remove the rack guide spring cap.

SST 09612-24012 (09612-10021)

7. REMOVE RACK GUIDE SPRING

8. REMOVE RACK GUIDE AND SEAT

9. REMOVE DUST COVER

10. REMOVE CONTROL VALVE HOUSING

(a) Place matchmarks on the control valve housing and rack housing.

(b) Remove the three bolts.

(c) Remove the control valve housing.

(d) Remove the O-ring.

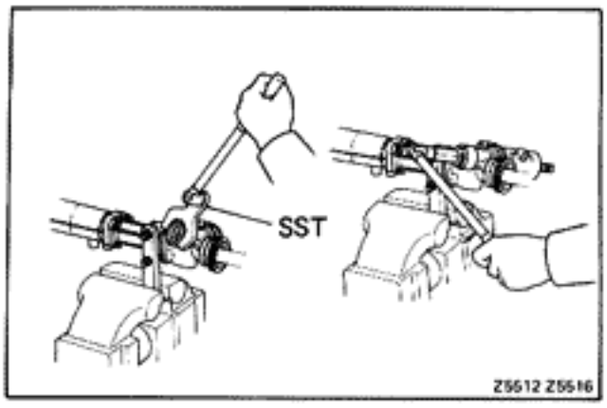

11. REMOVE PINION ADJUSTING SCREW LOCK NUT

Using SST, remove the pinion adjusting lock nut.

SST 09612-24012 (09617-24020)

12. REMOVE PINION ADJUSTING SCREW

Using SST, remove the pinion adjusting screw.

SST 09612-24012 (09612-10021)

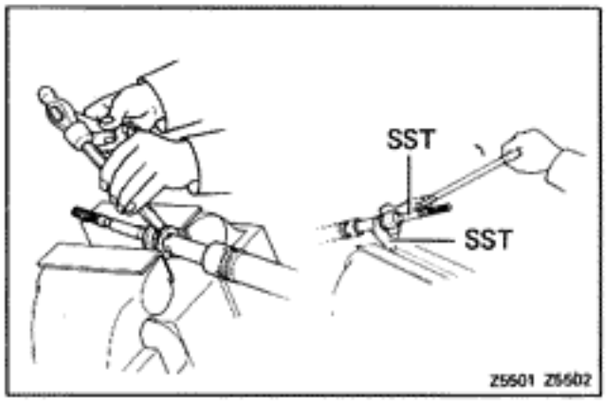

13. REMOVE RACK ENDS AND CLAW WASHER

(a) Unstake the claw washer.

CAUTION: Avoid any impact to the rack.

(b) Using SST, remove the rack ends.

SST 09612-24012 (09617-22030, 09617-24010)

NOTE: Mark the left and right rack ends.

(c) Remove the claw washer.

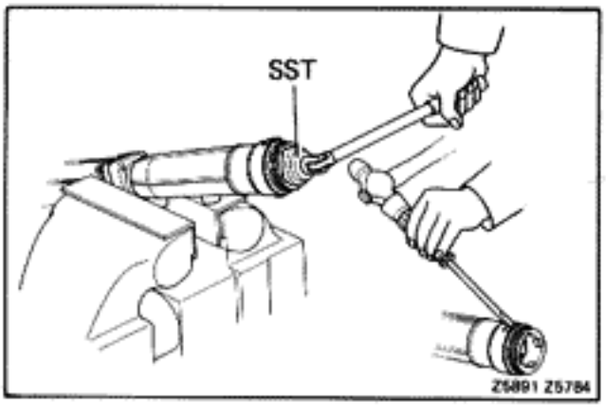

14. REMOVE CYLINDER END STOPPER NUT

(a) Unstake the staked part of cylinder housing.

(b) Using SST, remove the cylinder end stopper nut.

SST 09630-24013 (09631-24060)

15. REMOVE RACK HOUSING

(a) Remove the four bolts.

(b) Remove the rack housing.

(c) Remove the O-ring.

16. REMOVE SPACER FROM RACK HOUSING

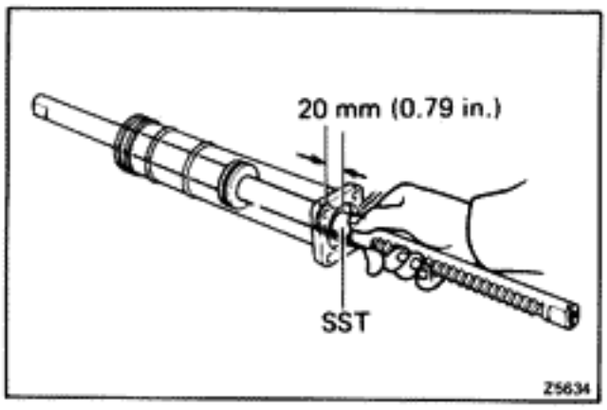

17. REMOVE STEERING RACK WITH CYLINDER END STOPPER, O-RING, RACK END GUIDE AND WAVE WASHER FROM CYLINDER HOUSING

(a) Insert SST into the cylinder housing until oil seal lip.

SST 09630-24013 (09631-24041)

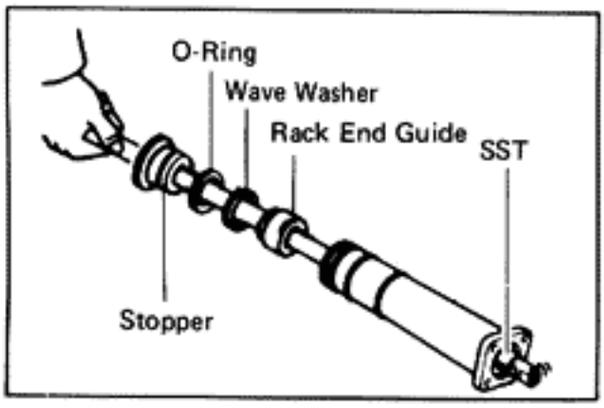

(b) Remove the steering rack with the stopper, O-ring, wave washer and rack end guide.

(c) Remove each part from the rack.

(d) Remove SST from rack housing.

SST 09630-24013 (09631-24041)

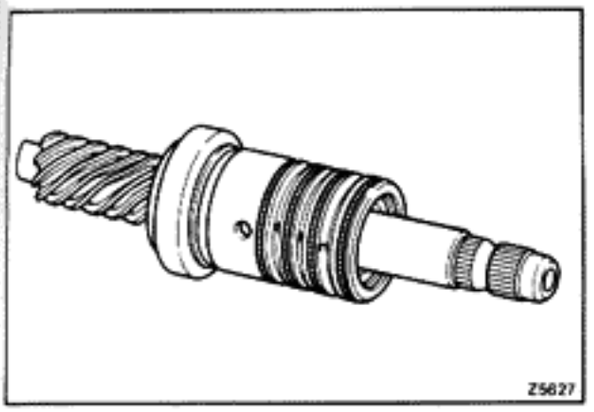

INSPECTION OF GEAR HOUSING

1. INSPECTION CONTROL VALVE
   (a) Remove the control valve with pinion from the yoke housing.
   (b) If necessary, replace the control valve assembly.

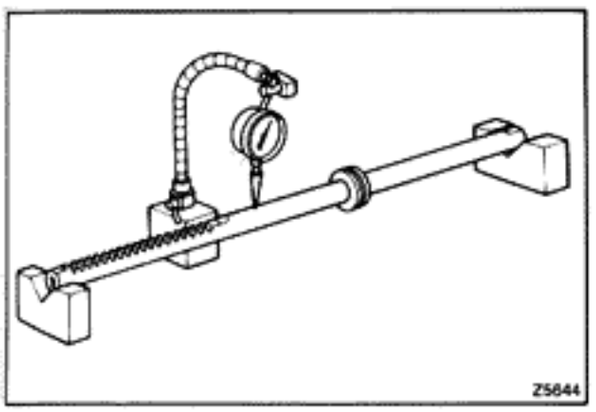

2. INSPECT STEERING RACK RUNOUT

   Runout: Limit 0.3 mm (0.012 in.)

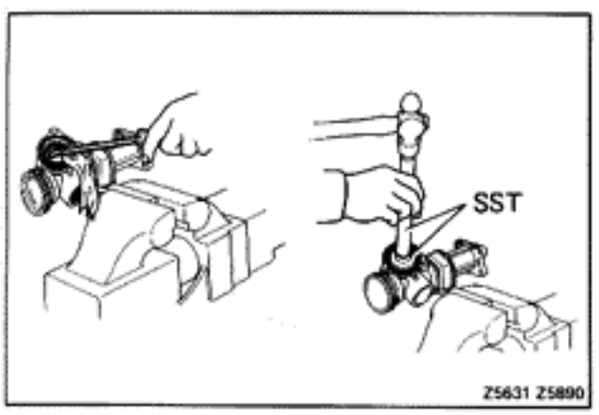

REPLACEMENT OF GEAR HOUSING

IF NECESSARY, REPLACE FOLLOWING PARTS:

1. OIL SEAL FOR RACK HOUSING
   (a) Remove the oil seal with a screwdriver.
   (b) Using SST, install the new oil seal.

   SST 09620-30010 (09631-00020)
   SST 09630-24013 (09631-24070)

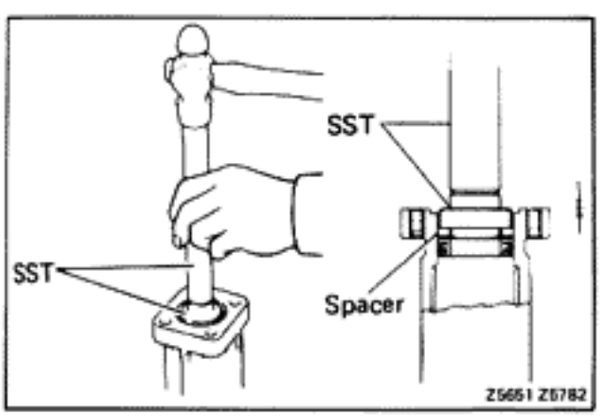

2. OIL SEAL FOR CYLINDER HOUSING
   (a) Using SST, drive out the oil seal.
   (b) Using SST and a hammer, install a new oil seal.

   SST 09620-30010 (09625-30010, 09631-00020)
   - Install the new oil seal.
   - Place the spacer on the oil seal.
   - Drive in the oil seal over the spacer until the round surface of SST is flush with housing surface.

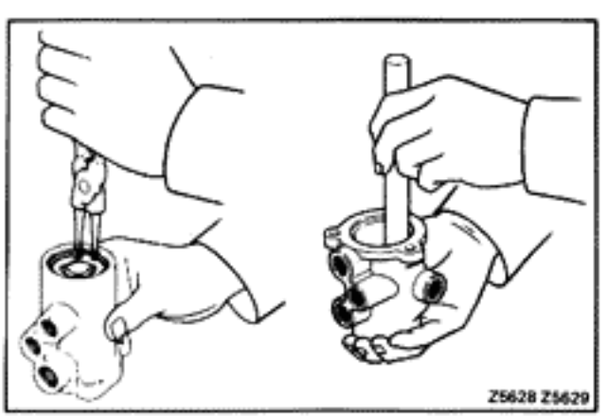

3. OIL SEAL AND BEARING FOR CONTROL VALVE HOUSING
   (a) Remove the snap ring.
   (b) Remove the bearing and oil seal with brass bar.

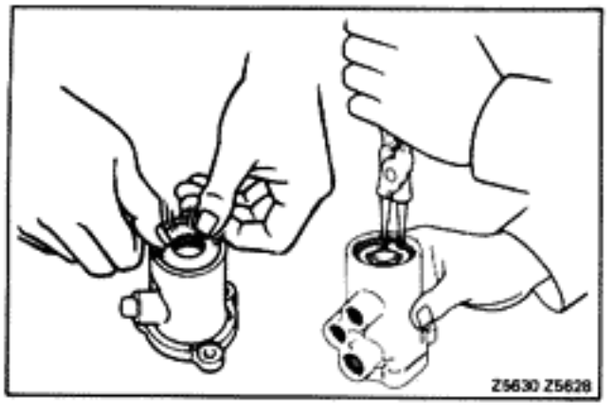

(c) Install the new bearing and oil seal.

(d) Install the snap ring.

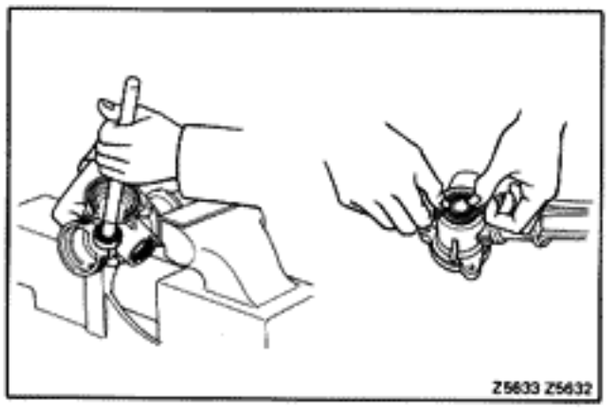

4. PINION LOWER BEARING

(a) Remove the bearing with brass bar.

(b) Install a new bearing.

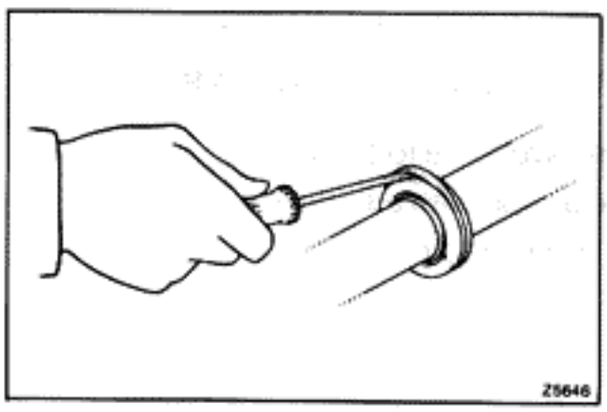

5. TEFLON RING AND O-RING

(a) Remove the teflon ring and O-ring.

(b) Install a new O-ring.

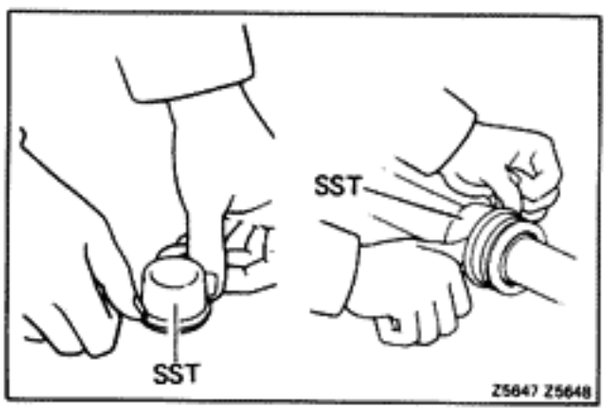

(c) Install a new teflon ring to SST and install it to the steering rack.

SST 09630-24013 (09631-24020)

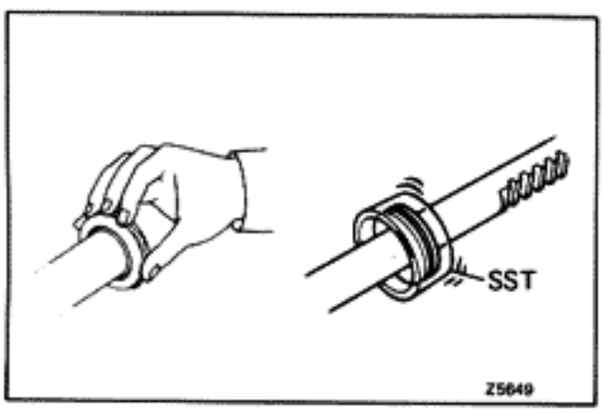

(d) Coat the teflon ring with power steering fluid and snug it down with your fingers.

(e) Carefully slide the tapered end of SST over the teflon ring to seat the ring.

SST 09630-24013 (09631-24030)

NOTE: Make sure the seal is uniformly spaced around the perimeter of the piston.

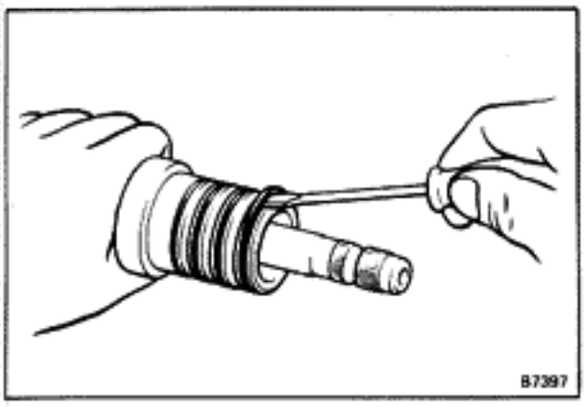

6. TEFLON RING FOR CONTROL VALVE

(a) Remove the teflon rings.

CAUTION: Be careful not to damage the control valve.

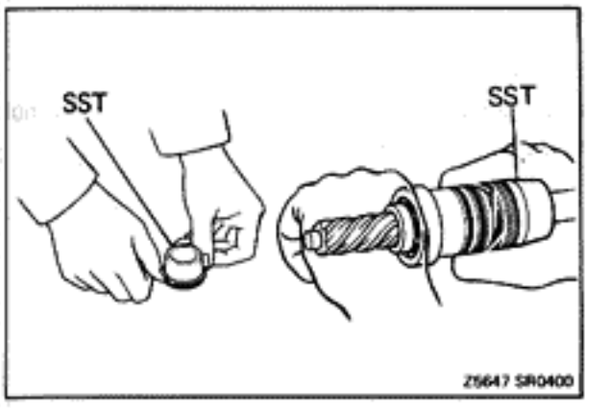

(b) Install a new teflon ring to SST and install it to the control valve.

SST 09630-24013 (09631-24020)

(c) Coat the teflon ring with power steering fluid and snug it down with your fingers.

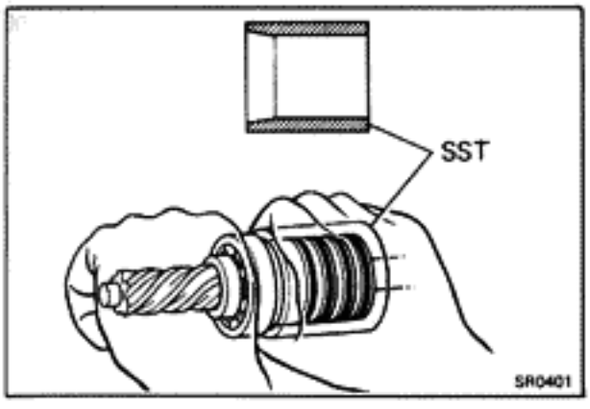

(d) Carefully slide the tapered end of the SST over the teflon ring to seat the ring.

SST 09630-24013 (09631-24030)

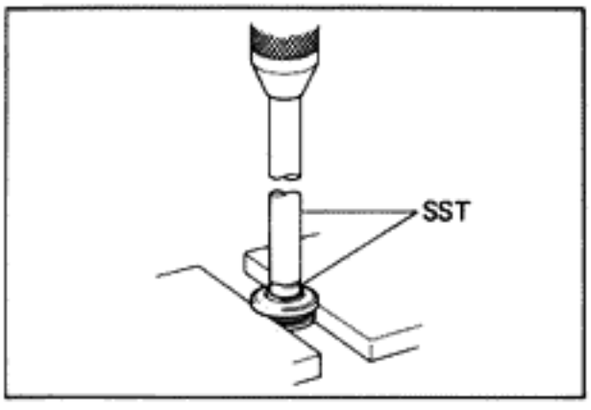

7. OIL SEAL AND BEARING FOR VALVE CAP

(a) Using SST, press out the oil seal and bearing from the valve cap.

SST 09620-30010 (09631-00020)
09630-24013 (09620-24010)

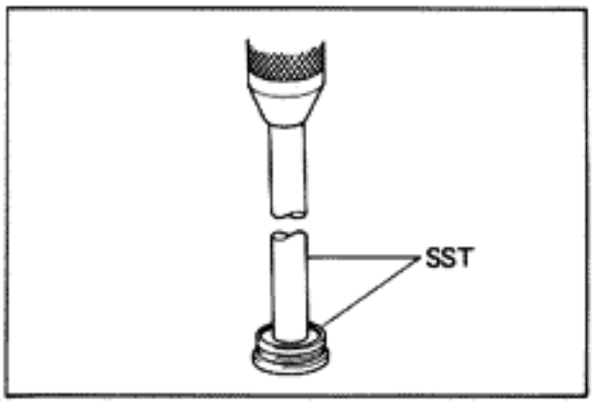

(b) Using SST, press the oil seal into the valve cap.

SST 09620-30010 (09631-00020)
09630-24013 (09620-24020)

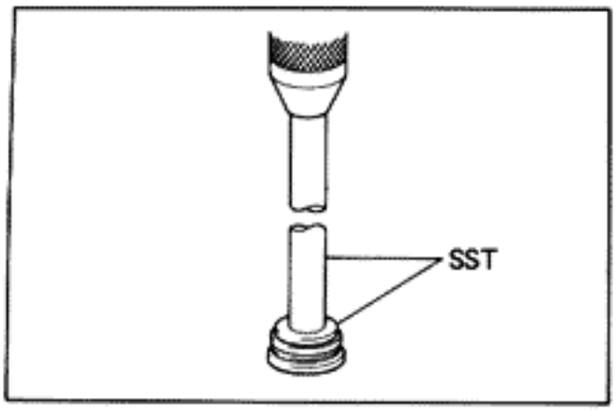

(c) Using SST, press the bearing into the valve cap.

SST 09620-30010 (09631-00020)
09630-24013 (09620-24030)

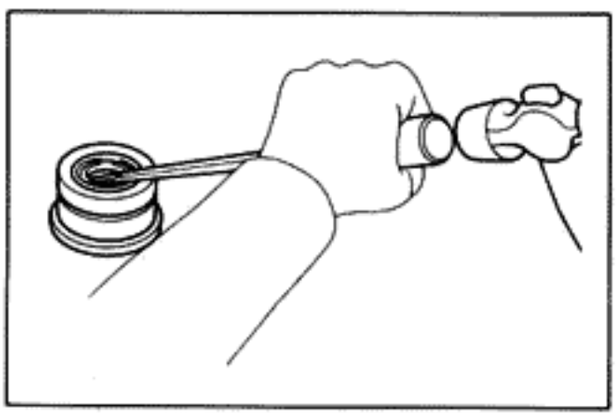

8. OIL SEAL FOR CYLINDER END STOPPER

(a) Tap out the oil seal from the cylinder end stopper.

CAUTION: When tapping out the oil seal, be careful not to damage the inside of cylinder end stopper.

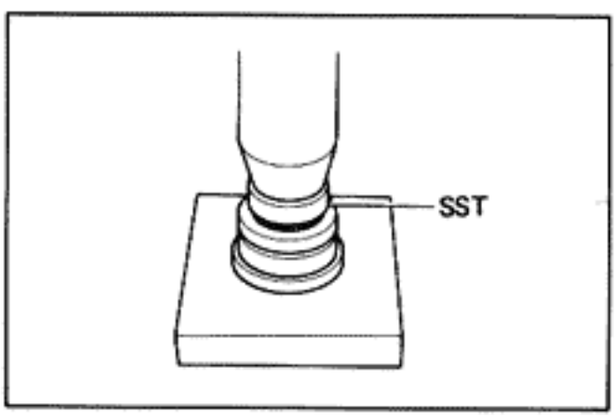

(b) Using SST, press the oil seal into the cylinder end stopper.

SST 09631-20040

ASSEMBLY OF GEAR HOUSING

(See page SR-27)

1. COAT POWER STEERING FLUID ON FOLLOWING PARTS:

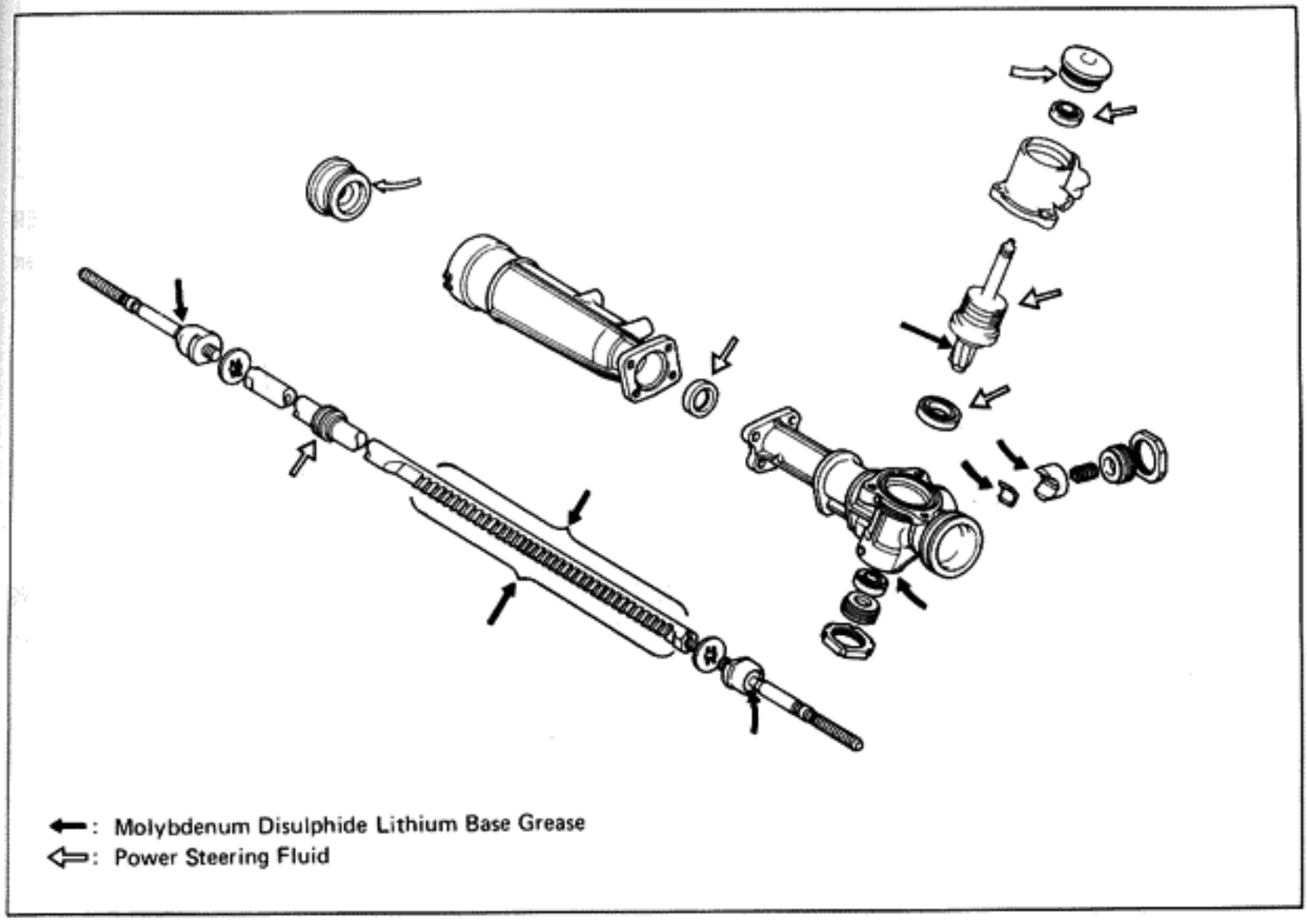

⬅: Molybdenum Disulphide Lithium Base Grease
⇦: Power Steering Fluid

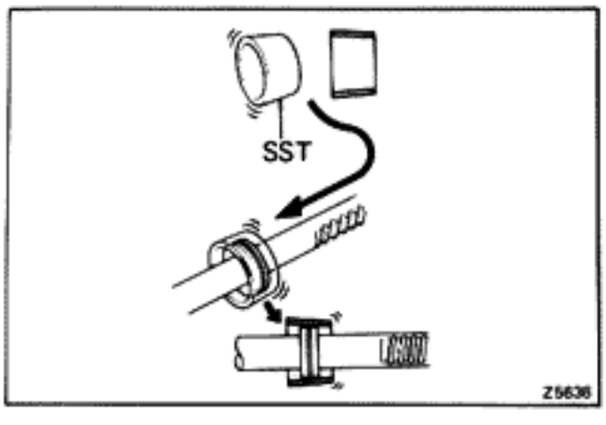

2. INSTALL SEAT AND SPACER

3. INSTALL STEERING RACK ASSEMBLY

(a) Insert SST into a new teflon ring of the piston.

SST 09630-24013 (09631-24030)

NOTE: Protect the teflon ring from damage.

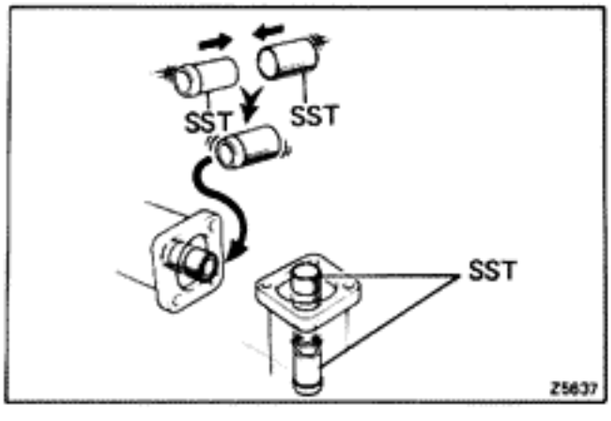

(b) Insert SST into a new oil seal of the cylinder housing.

- Install one SST into the other.
- Insert two SST into the oil seal.
- Remove one SST from the other.

SST 09630-24013 (09631-24041, 09631-24050)

NOTE: Protect the oil seal lip from damage.

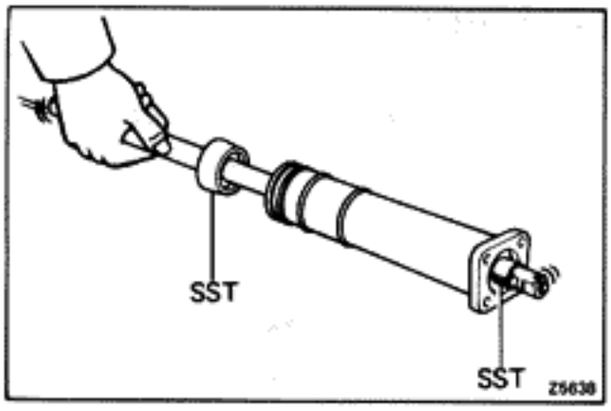

(c) Install the steering rack to the cylinder housing.

(d) Remove SST.

SST 09630-24013 (09631-24030, 09631-24041)

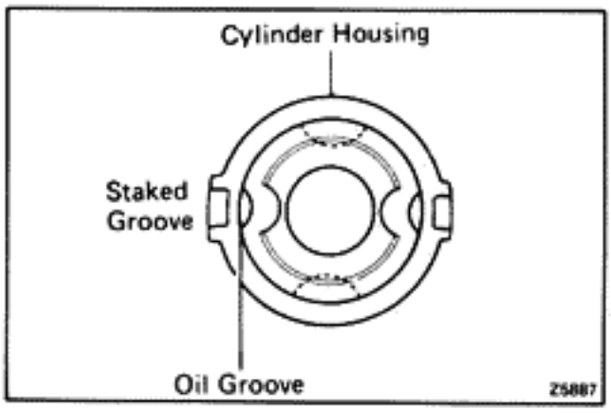

4. INSTALL RACK END GUIDE AND WAVE WASHER

Install the rack end guide with oil groove facing toward the staked groove.

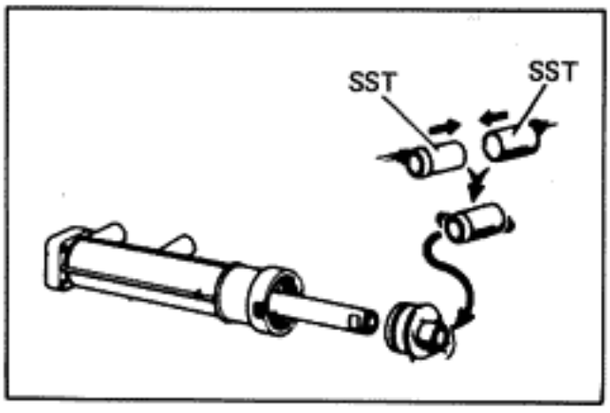

5. INSTALL CYLINDER END STOPPER WITH O-RING

(a) Insert SST to the oil seal of the cylinder end stopper.

- Install one SST into the other.
- Install two SST into the oil seal.
- Remove one SST from the other.

(b) Install the cylinder end stopper to the cylinder housing.

(c) Remove SST.

SST 09630-24013 (09631-24041, 09631-24050)

6. INSTALL RACK HOUSING TO CYLINDER HOUSING

NOTE: Make sure that the O-ring, spacer and seal are installed between the rack housing and the cylinder housing.

(a) Install the rack housing.

(b) Install the four bolts and torque them.

Torque: 185 kg-cm (13 ft-lb, 18 N·m)

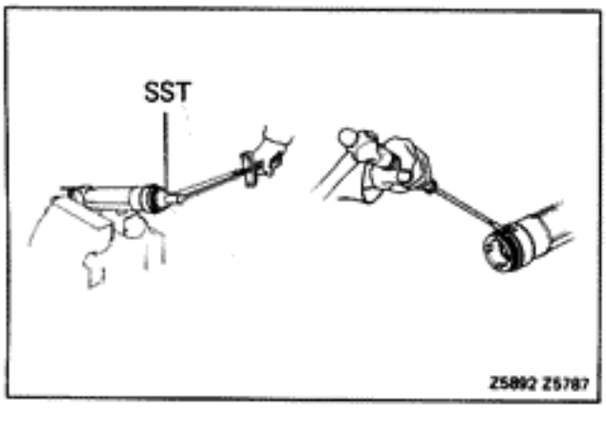

7. INSTALL CYLINDER END STOPPER NUT

(a) Coat liquid sealer onto the screw surface of the new nut.

(b) Install the cylinder end stopper nut with SST and torque the nut.

SST 09630-24013 (09631-24060)

Torque: 1,750 kg-cm (127 ft-lb, 172 N·m)

(c) Stake the end stopper nut to the cylinder housing flange.

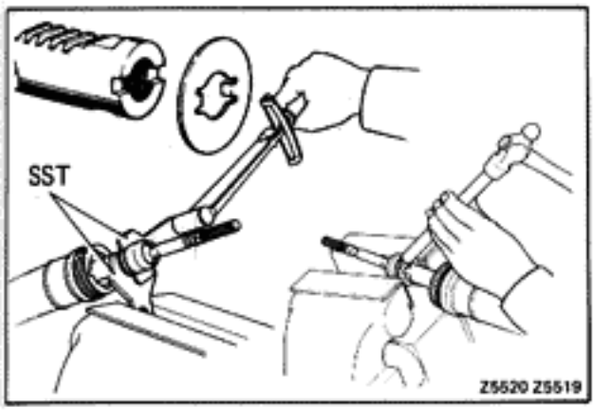

8. INSTALL CLAW WASHER AND RACK ENDS

(a) Install the claw washer.

NOTE: Align the claw of the claw washer with the rack groove.

(b) Tighten the rack end and torque it with SST.

SST 09612-24012 (09617-22030, 09617-24010)

Torque: 1,050 kg-cm (76 ft-lb, 103 N·m)

(c) Stake the claw washer.

9. INSTALL CONTROL VALVE ASSEMBLY INTO CONTROL VALVE HOUSING

10. INSTALL CONTROL VALVE SPRING SEAT

11. INSTALL COMPRESSION SPRING

12. INSTALL O-RING AND CONTROL VALVE HOUSING TO RACK HOUSING

(a) Align the marks on the control housing and rack housing.

(b) Coat liquid sealer onto the screw surface of the bolt.

(c) Install the three bolts and torque them.

Torque: 185 kg-cm (13 ft-lb, 18 N·m)

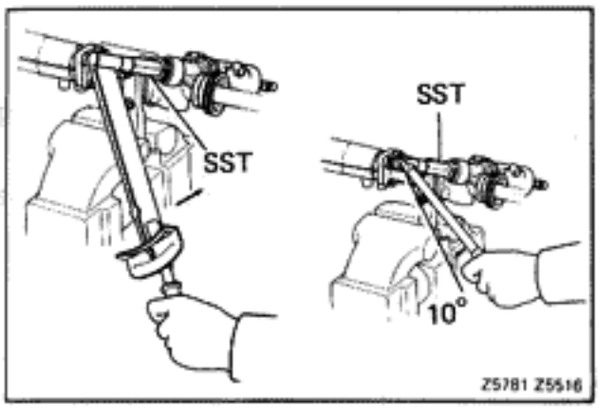

13. ADJUST CONTROL VALVE SHAFT PRELOAD

(a) Coat liquid sealer onto the screw surface of the bolt.

(b) Tighten the pinion adjusting screw and torque with SST.

SST 09612-24012 (09612-10021)

Torque: 150 kg-cm (11 ft-lb, 15 N·m)

(c) Return the pinion adjusting screw 10°.

(d) Using SST, measure the preload.

SST 09616-00010

Preload (turning): 4.5 – 6.5 kg-cm (3.9 – 5.6 in.-lb, 0.4 – 0.6 N·m)

If incorrect, readjust.

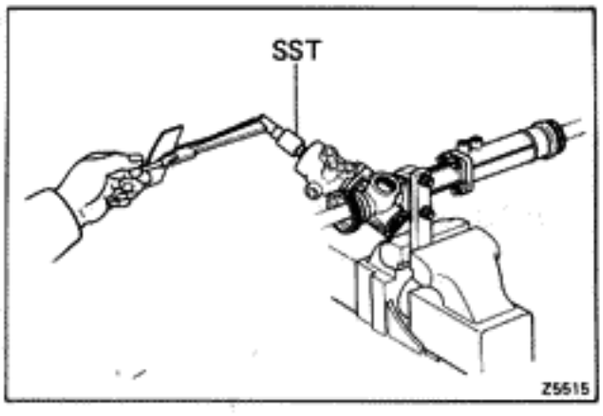

14. INSTALL PINION ADJUSTING SCREW LOCK NUT

(a) Coat liquid sealer onto the lock nut and gear housing contact surfaces.

(b) Install the pinion adjusting screw lock nut and torque it with SST.

SST 09612-24012 (09612-10021, 09617-24020)

Torque: 700 kg-cm (51 ft-lb, 69 N·m)

(c) Recheck the control valve shaft preload.

Preload (turning): 4.5 – 6.5 kg-cm (3.9 – 5.6 in.-lb, 0.4 – 0.6 N·m)

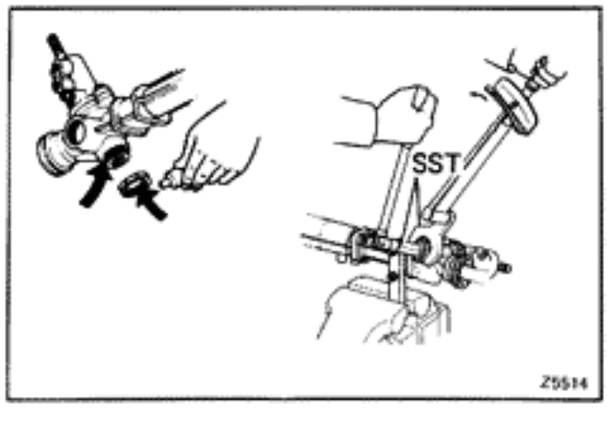

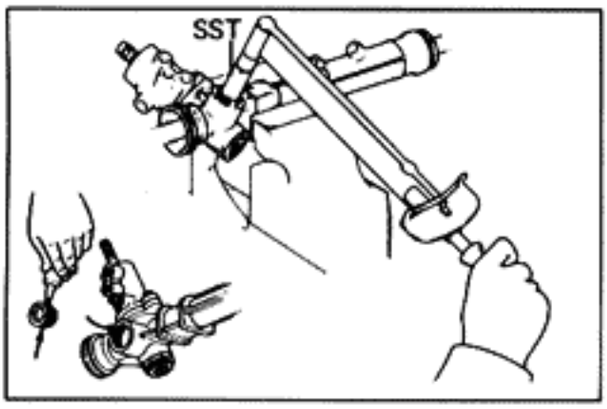

15. INSTALL SEAT AND RACK GUIDE

16. INSTALL RACK GUIDE SPRING AND CAP

(a) Install the rack guide spring.

(b) Coat liquid sealer onto the screw surface of the cap.

(c) Using SST, install the rack guide spring cap.

SST 09612-24012 (09612-10021)

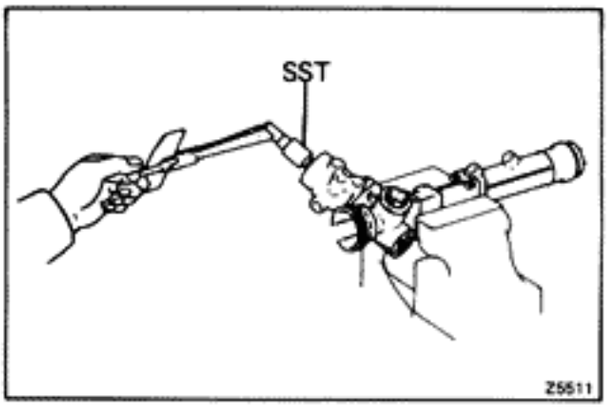

17. ADJUST TOTAL PRELOAD

(a) Tighten the rack guide spring cap with SST and torque it.

Torque: 250 kg-cm (18 ft-lb, 25 N·m)

(b) Using SST, return the rack guide spring cap 90°.

(c) Using SST, measure the preload.

SST 09616-00010

Preload (turning): 9 – 12 kg-cm (7.8 – 10.4 in.-lb, 0.9 – 1.2 N·m)

If incorrect, readjust.

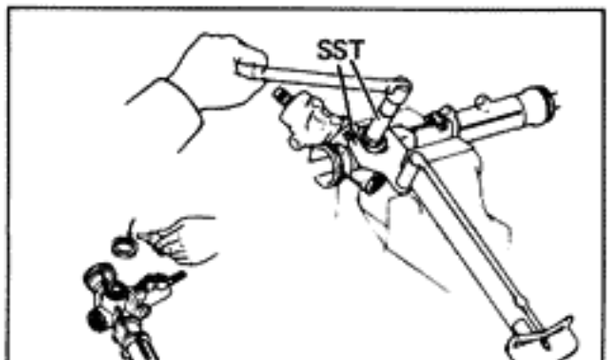

18. INSTALL RACK GUIDE SPRING CAP LOCK NUT

(a) Coat liquid sealer onto the lock nut and gear housing contact surfaces.

(b) Tighten the rack guide spring cap lock nut and torque it with SST.

SST 09612-24012 (09612-10021, 09617-24020)

Torque: 700 kg-cm (51 ft-lb, 69 N·m)

(c) Recheck the total preload.

If incorrect, readjust.

Preload (turning): 9 – 12 kg-cm (7.8 – 10.4 in.-lb, 0.9 – 1.2 N·m)

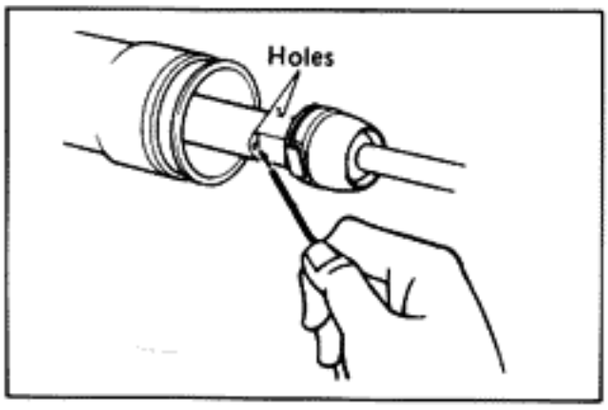

19. INSTALL DUST COVER

20. INSTALL RACK BOOTS, CLAMPS AND CLIPS

(a) Insure that the tube hole is not clogged with grease.

NOTE: If the tube hole is clogged, the pressure inside the boot will change after it is assembled and the handle turned.

(b) Install boots.

NOTE: As the left and right boots are different, be careful not to interchange them.

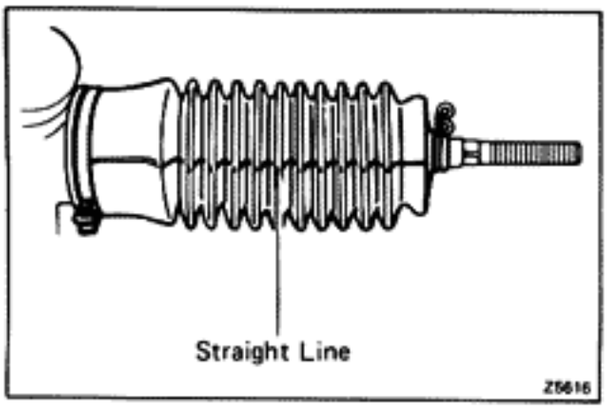

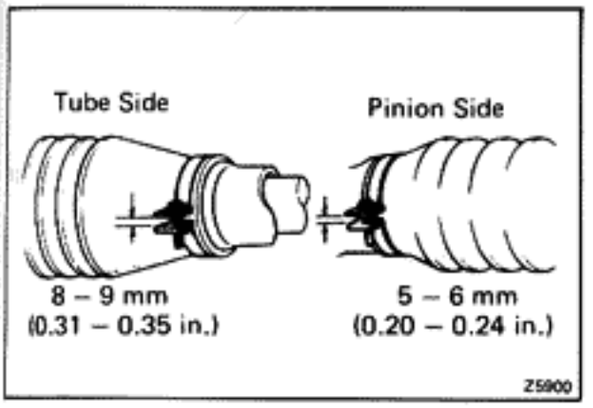

(c) Install the rack boot clamps as shown in the figure.

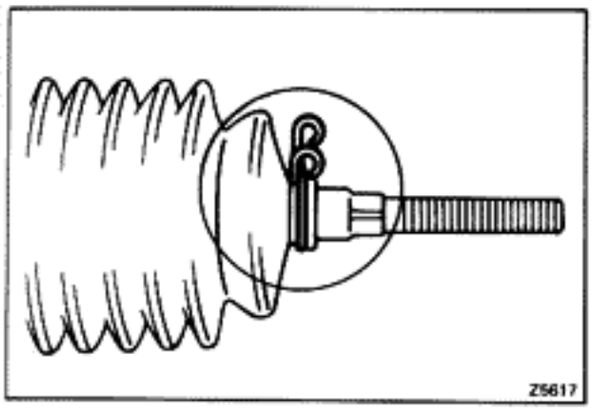

(d) Install rack boot clips.

NOTE: Face the open ends outward, as shown, to avoid damage to the boots.

21. INSTALL TIE ROD

(a) Align the marks on the tie rod and rack end.

(b) Tighten the nuts and torque them.

Torque: 175 kg-cm (13 ft-lb, 17 N·m)

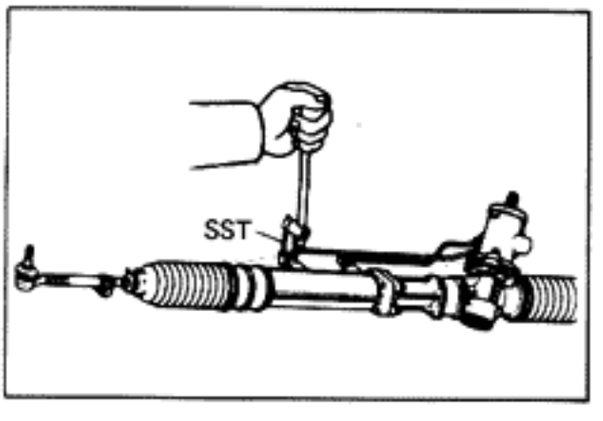

22. INSTALL RIGHT AND LEFT TURN PRESSURE TUBES

(a) Install the union seats.

(b) Using SST, tighten the tubes and torque them.

SST 09631-22020

Torque: 300 kg-cm (22 ft-lb, 29 N·m)

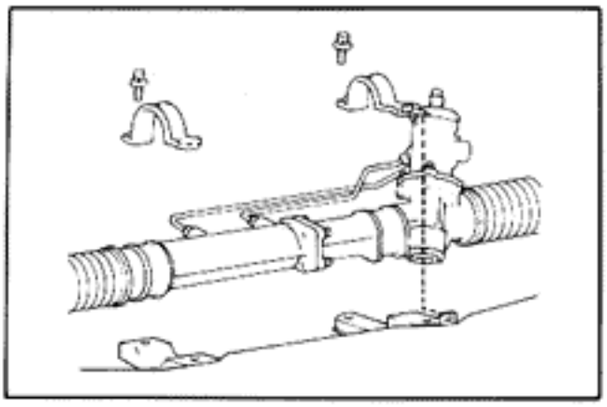

INSTALLATION OF GEAR HOUSING

(See page SR-26)

1. INSTALL GEAR HOUSING ASSEMBLY

NOTE: Be careful not to damage the boots. Install four bolts and torque them.

Torque: 770 kg-cm (56 ft-lb, 76 N-m)

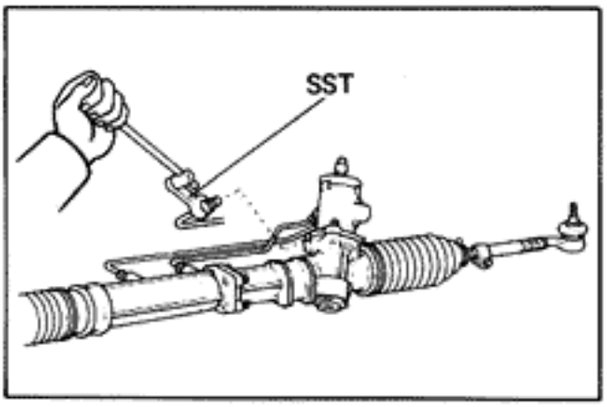

2. CONNECT RETURN AND PRESSURE LINE

(a) Install the union seat.

(b) Using SST, connect the pressure line and torque it.

SST 09631-22020

Torque: 390 kg-cm (28 ft-lb, 38 N-m)

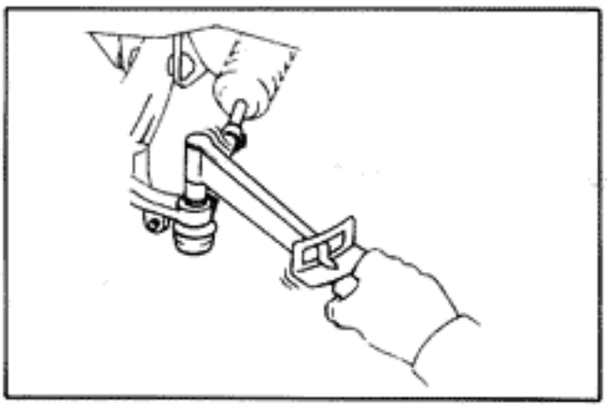

3. CONNECT TIE ROD ENDS

(a) Install the tie rod end set nut and torque it.

Torque: 600 kg-cm (43 ft-lb, 59 N-m)

(b) Install the new cotter pin.

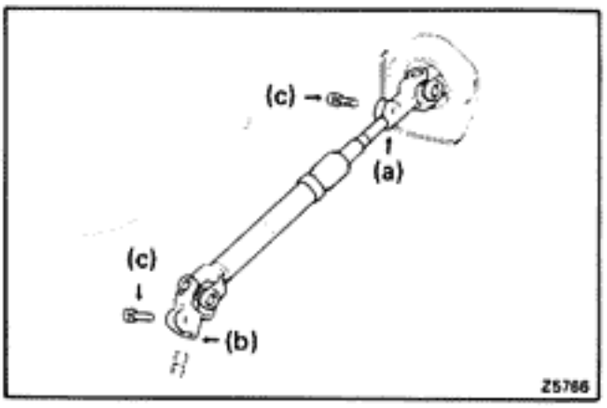

4. INSTALL INTERMEDIATE SHAFT

(a) Install the column side first.

(b) Install the rack housing side.

(c) Install the two bolts and torque them.

Torque: 350 kg-cm (25 ft-lb, 34 N-m)

5. FILL WITH POWER STEERING FLUID (See page SR-14)

6. BLEED SYSTEM (See page SR-15)

7. CHECK FOR FLUID LEAKS

8. ADJUST TOE-IN (See page FA-5)

BODY ELECTRICAL SYSTEM

	Page
GENERAL INFORMATION	BE-2
LOCATION OF SWITCHES AND RELAYS	BE-7
IGNITION SWITCH	BE-11
LIGHTING	BE-12
HEADLIGHT CLEANER	BE-21
WIPERS AND WASHERS	BE-22
INSTRUMENTS AND SENDER GAUGES	BE-27
REAR WINDOW DEFOGGER	BE-61
HEATER	BE-63
POWER WINDOW	BE-65
DOOR LOCK CONTROL SYSTEM	BE-67
SUN ROOF	BE-69
CRUISE CONTROL SYSTEM	BE-70
REMOTE CONTROL MIRROR	BE-85
MIRROR HEATER	BE-86
THEFT DETERRENT SYSTEM	BE-87
RADIO, STEREO TAPE PLAYER AND ANTENNA	BE-101
CLOCK	BE-111
TRIP COMPUTER	BE-113

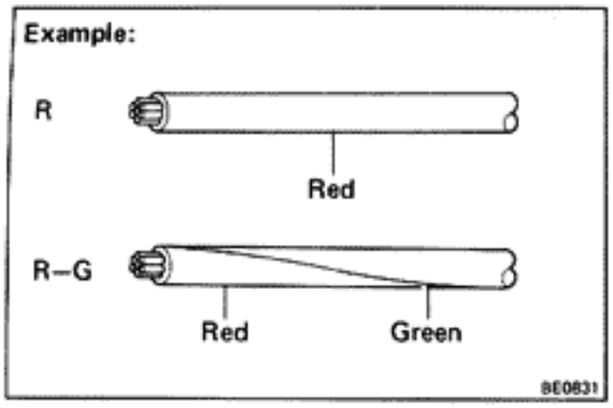

GENERAL INFORMATION

WIRING COLOR CODE

Wire colors are indicated by an alphabetical code.

B	= Black	L	= Light Blue	R	= Red
BR	= Brown	LG	= Light Green	V	= Violet
G	= Green	O	= Orange	W	= White
GR	= Gray	P	= Pink	Y	= Yellow

The first letter indicates the basic wire color and the second letter indicates the color of the stripe.

CONNECTOR

1. PIN NUMBER OF FEMALE CONNECTOR

Numbered in order from upper left to lower right.

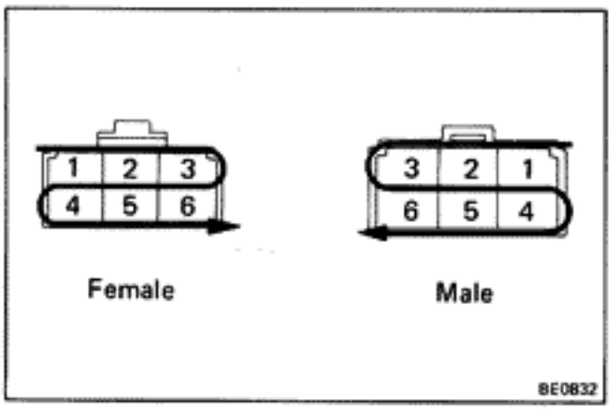

2. PIN NUMBER OF MALE CONNECTOR

Numbered in order from upper right to lower left.

3. DISTINCTION OF MALE AND FEMALE CONNECTORS

Male and female connectors are distinguished by shape of their internal pins.

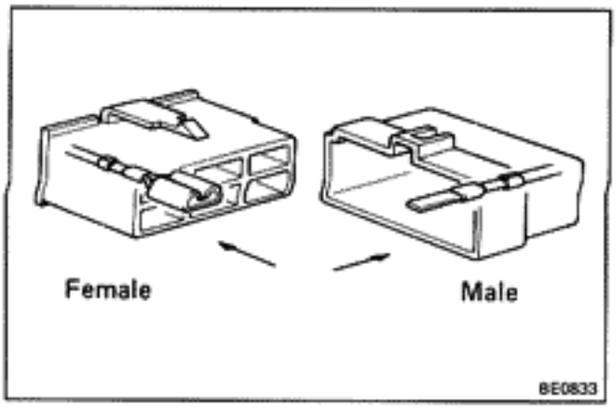

(a) All connectors are shown from the open end, and the lock is on top.

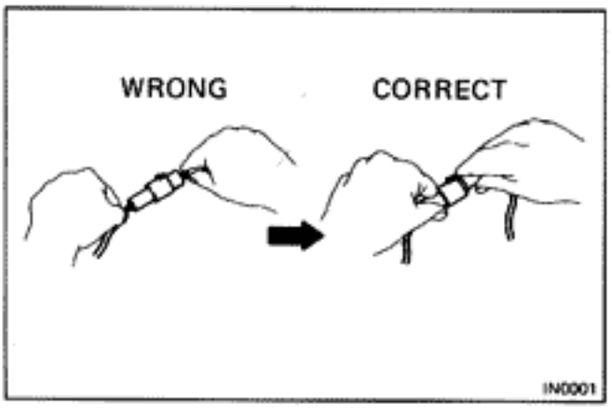

(b) To pull apart the connectors, pull on the connector itself, not the wires.

REPLACEMENT OF COMBINATION SWITCH

REMOVE TERMINALS FROM CONNECTOR

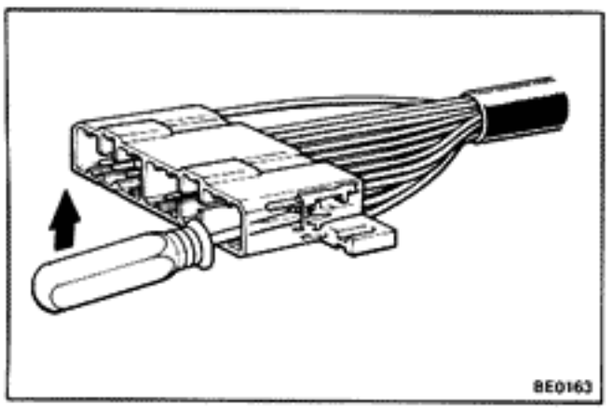

(a) From the open end, insert a miniature screwdriver between the locking lugs and terminal.

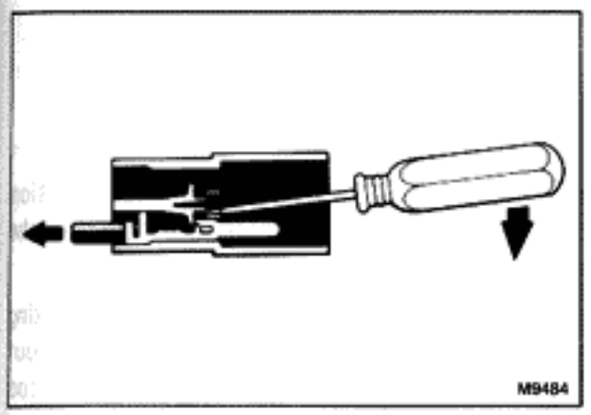

(b) Pry up the locking lugs with the screwdriver and pull the terminal out from the rear.

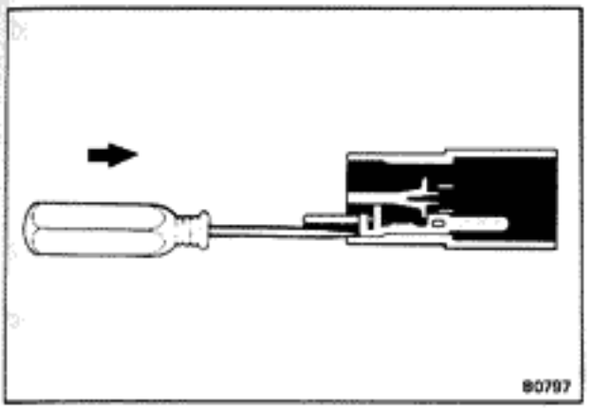

INSTALL TERMINALS TO CONNECTOR

(a) Push in the terminal until it is securely locked in the connector lug.

(b) Pull on the wire to confirm that it is securely locked.

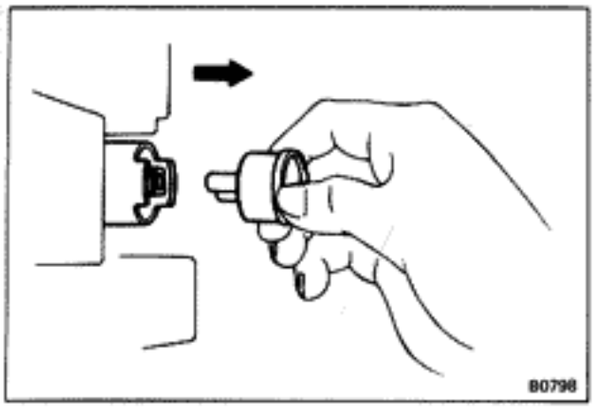

RESET CIRCUIT BREAKER

1. REMOVE CIRCUIT BREAKER

(a) Remove the kick panel.

(b) Remove the circuit breaker.

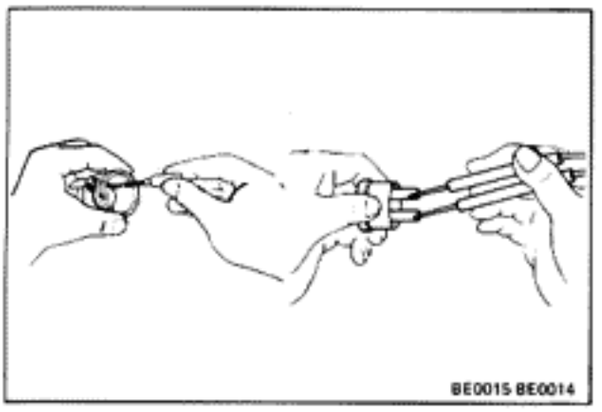

2. RESET CIRCUIT BREAKER

(a) Insert the needle into the reset hole and push it.

(b) Using an ohmmeter, check that there is continuity between both terminals of the circuit breaker.

If there is no continuity, replace the circuit breaker.

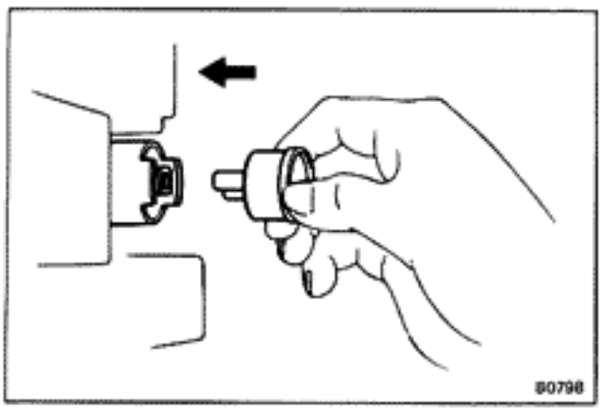

3. INSTALL CIRCUIT BREAKER

(a) Install the circuit breaker.

NOTE: If a circuit breaker continues to cut out, a short circuit is indicated. Have the system checked by a qualified technician.

(b) Install the kick panel.

REPLACEMENT OF FUSES

Install new fuses with correct amperage ratings.

CAUTION:

1. **Turn off all electrical components and the ignition switch before replacing a fuse. Do not exceed the fuse amp rating.**
2. **Always use a fuse puller for removing and inserting a fuse. Remove and insert straight in and out without twisting. Twisting could force open the terminals too much, resulting in a bad connection.**

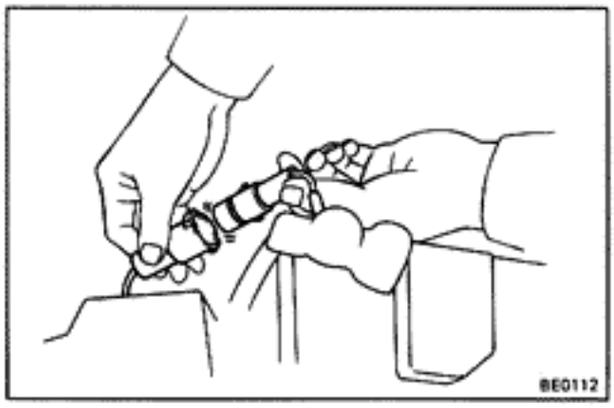

If a fuse continues to blow, the circuit is probably shorted. Have the system checked by a qualified technician.

Precautions

TAKE CARE WHEN INSPECTING HEADLIGHT CIRCUIT

WARNING: With the headlight switch OFF, disconnect the pink fusible link before beginning work.

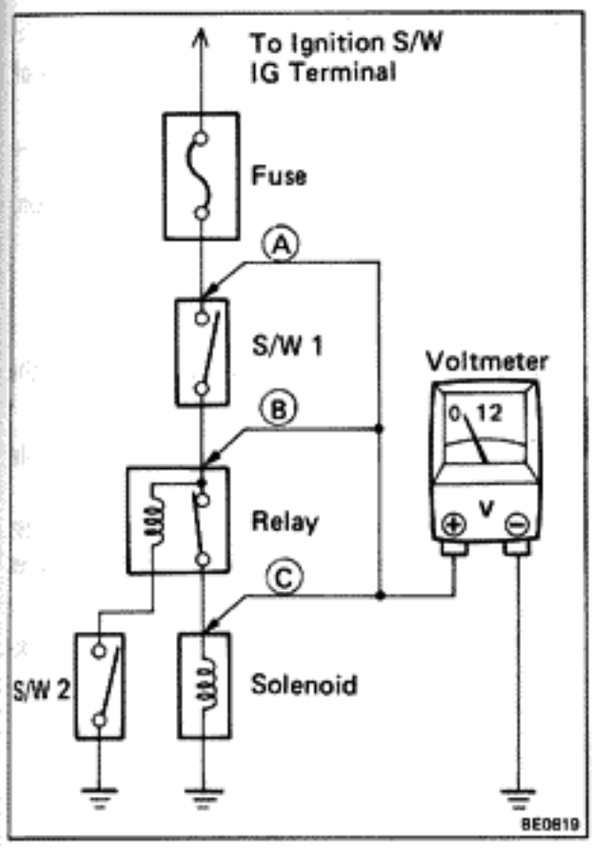

VOLTAGE CHECK

(a) Establish conditions in which voltage is present at the check point.

Example:

Ⓐ – Ignition S/W on
Ⓑ – Ignition S/W and S/W 1 on
Ⓒ – Ignition S/W, S/W 1 and Relay on (S/W 2 off)

(b) Using a voltmeter, connect the negative lead to a good ground point or negative battery terminal, and the positive lead to the connector or component terminal. This check can be done with a test lamp instead of a voltmeter.

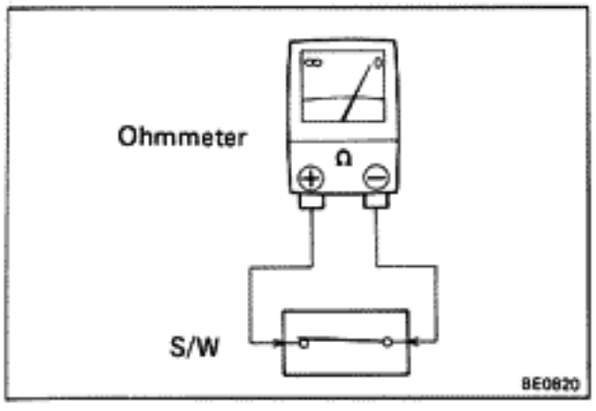

CONTINUITY AND RESISTANCE CHECK

(a) Disconnect the battery terminal or wire so there is no voltage between the check points.

(b) Contact the two leads of an ohmmeter to each of the check points.

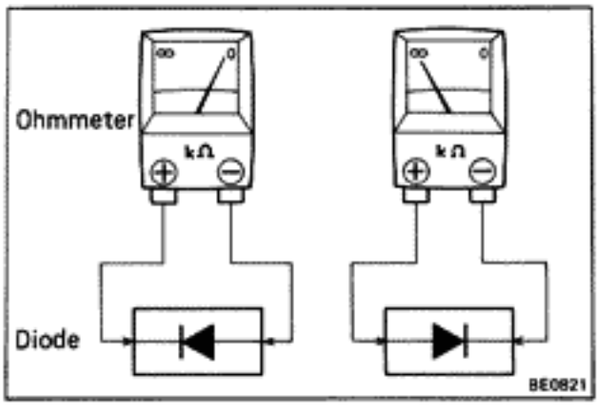

If the circuit has diodes, reverse the two leads and check again.
When contacting the negative lead to the diode positive side and the positive lead to the negative side, there should be continuity.
When contacting the two leads in reverse, there should be no continuity.

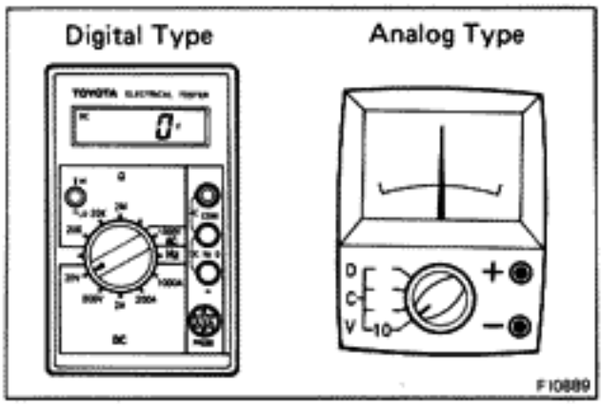

(c) Use a volt/ohmmeter with high impedance (10 kΩ/V minimum) for troubleshooting of the electrical circuit.

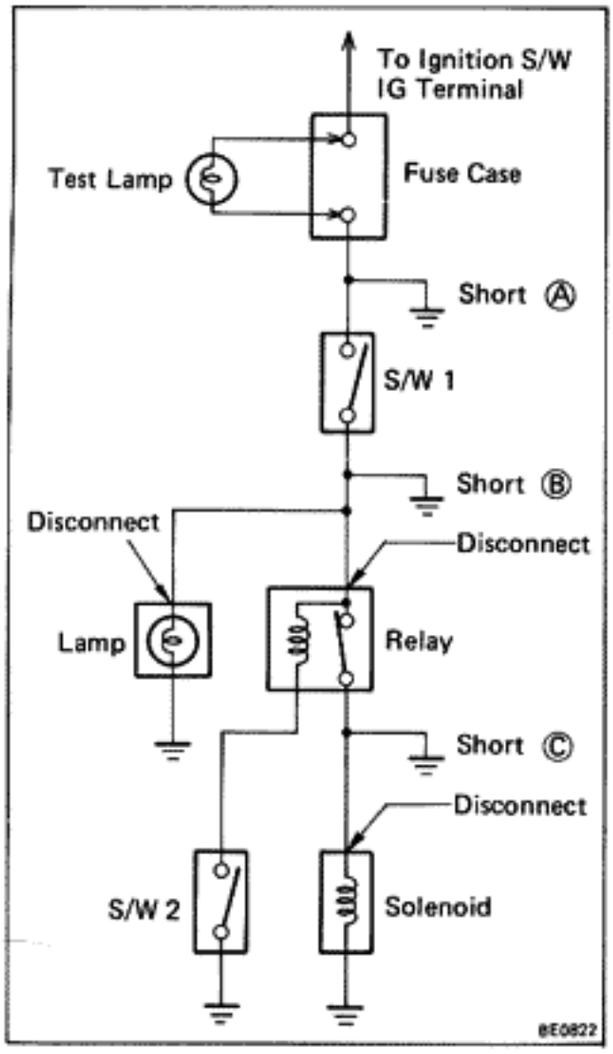

FINDING A SHORT CIRCUIT

(a) Remove the blown fuse and disconnect all loads of the fuse.

(b) Connect a test lamp in place of the fuse.

(c) Establish conditions in which the test lamp comes on.

Example:

Ⓐ – Ignition S/W on
Ⓑ – Ignition S/W and S/W 1 on
Ⓒ – Ignition S/W, S/W 1 and Relay on (Connect the Relay) and S/W 2 off (or Disconnect S/W 2)

(d) Disconnect and reconnect the connectors while watching the test lamp.
The short lies between the connector where the test lamp stays lit and the connector where the lamp goes out.

(e) Find the exact location of the short by lightly shaking the problem wire along the body.

LOCATION OF SWITCHES AND RELAYS

ENGINE COMPARTMENT SWITCHES AND RELAYS

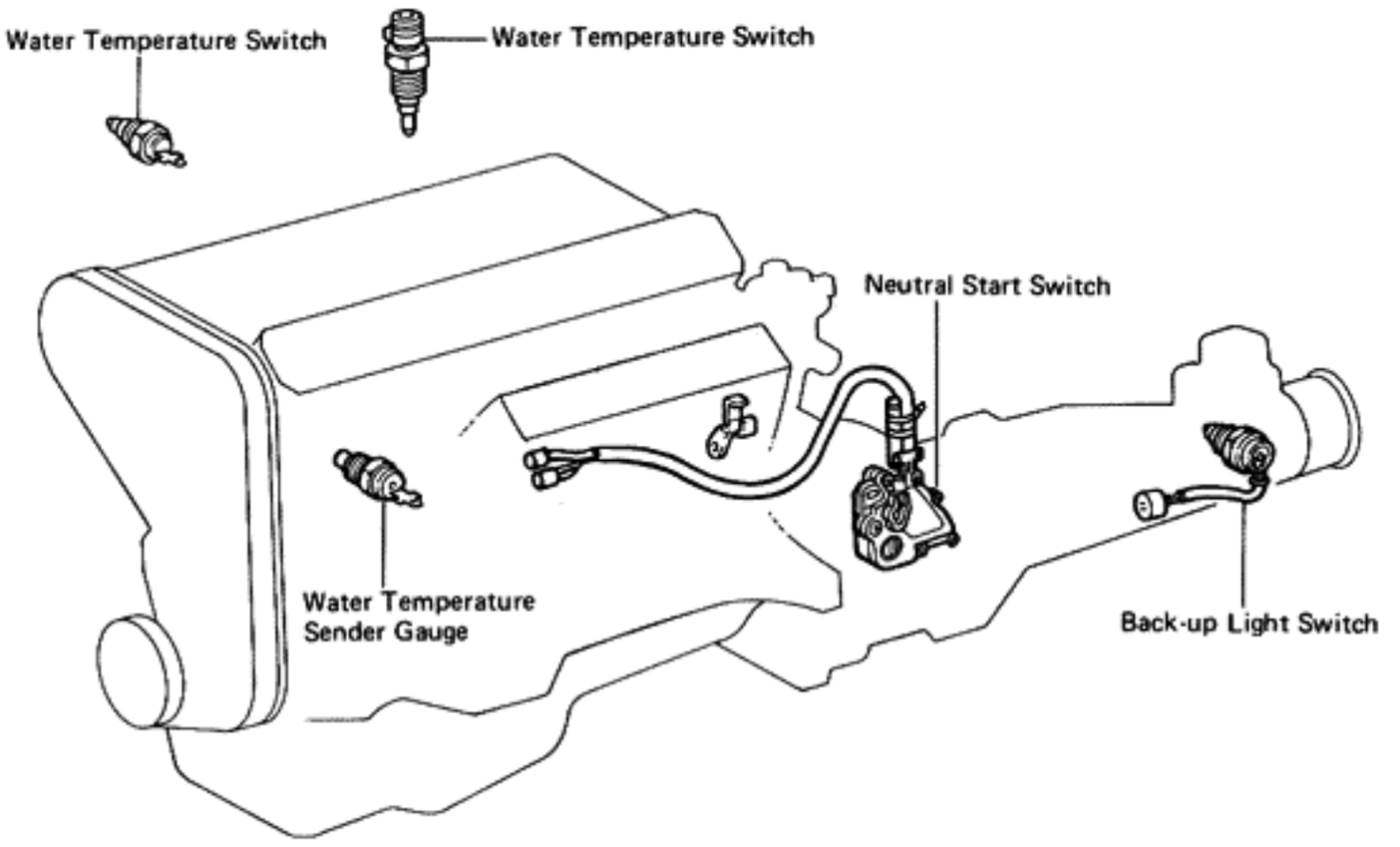

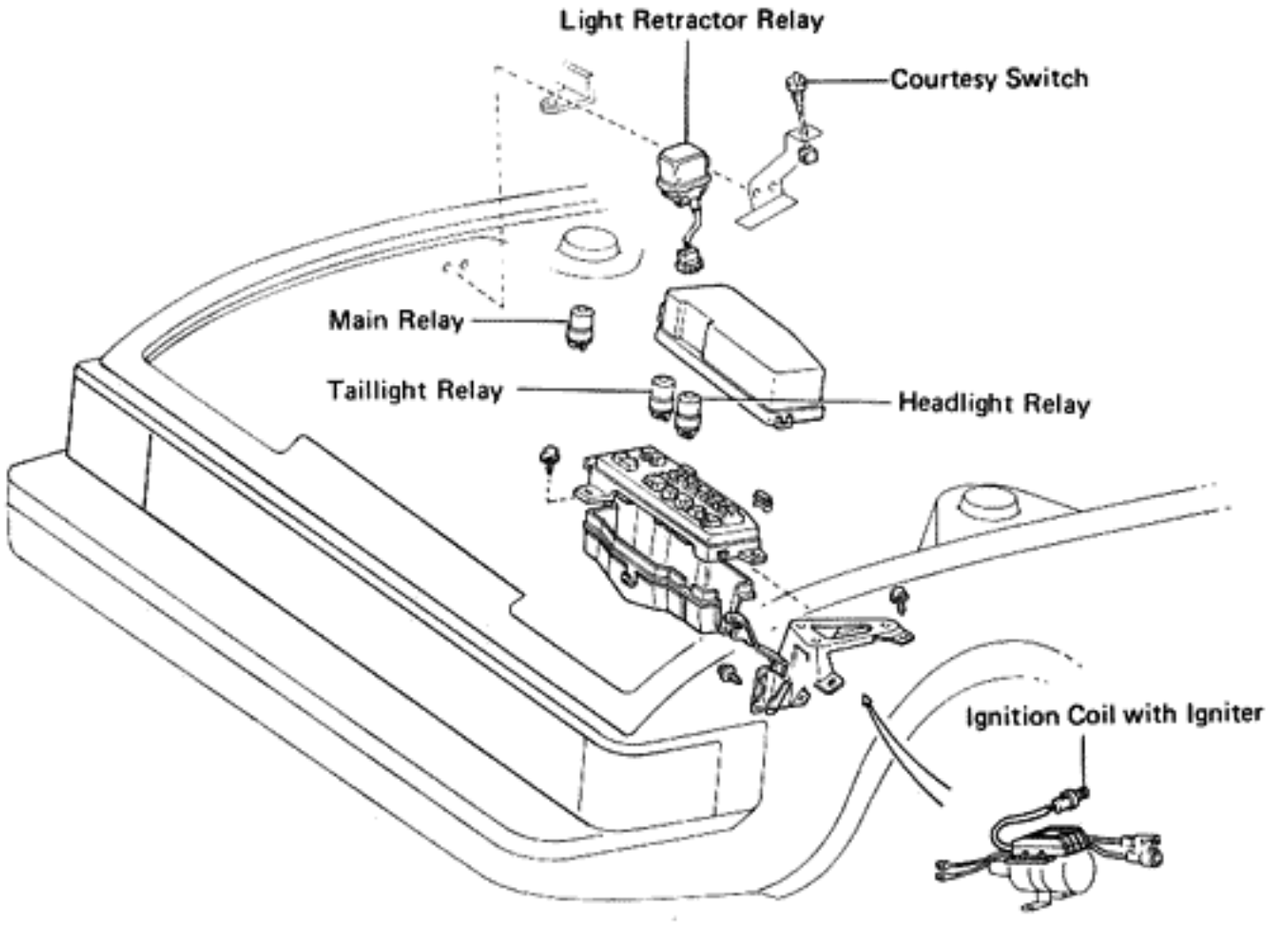

INSTRUMENT PANEL SWITCHES AND RELAYS

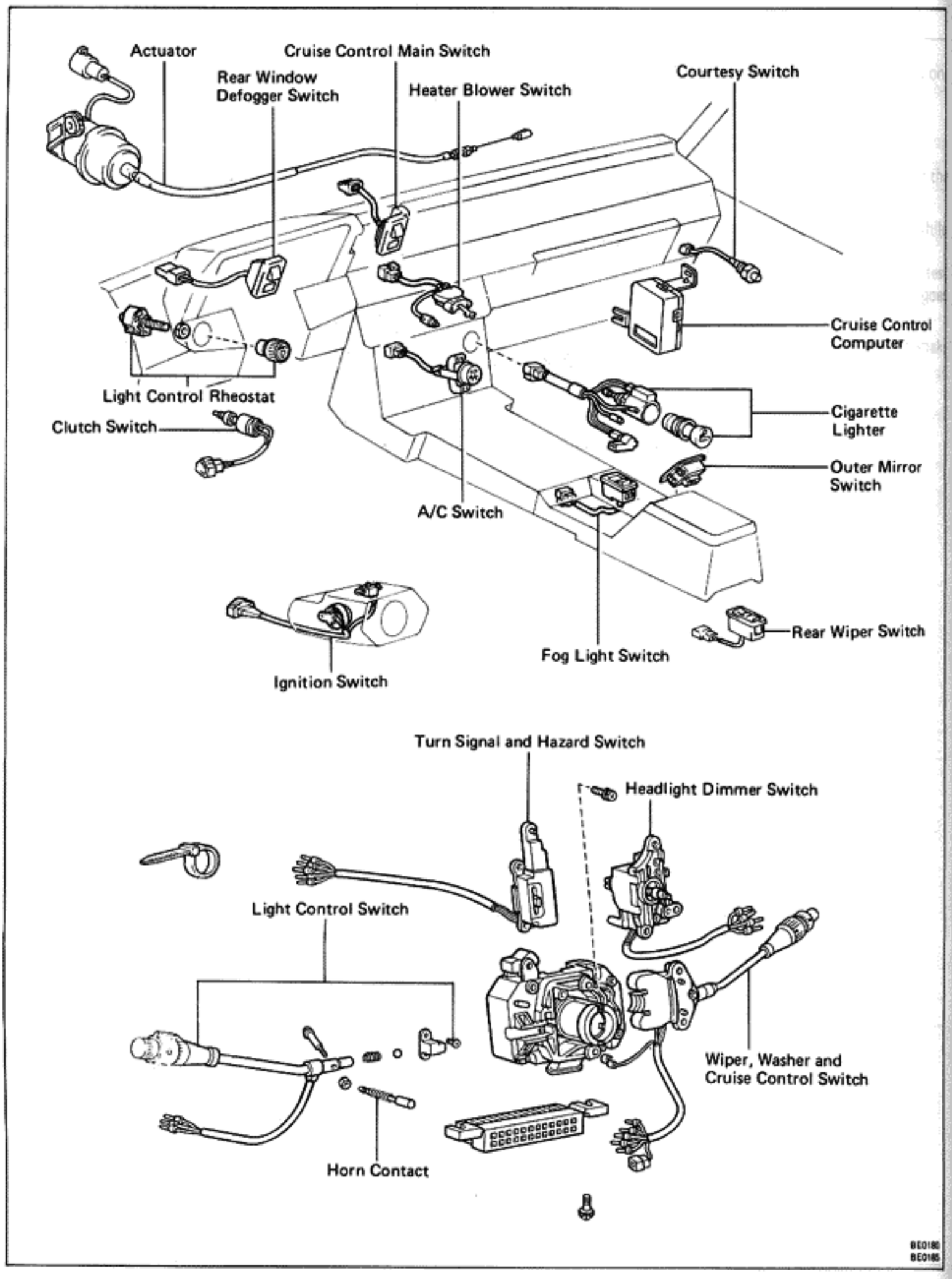

PASSENGER COMPARTMENT SWITCHES AND RELAYS

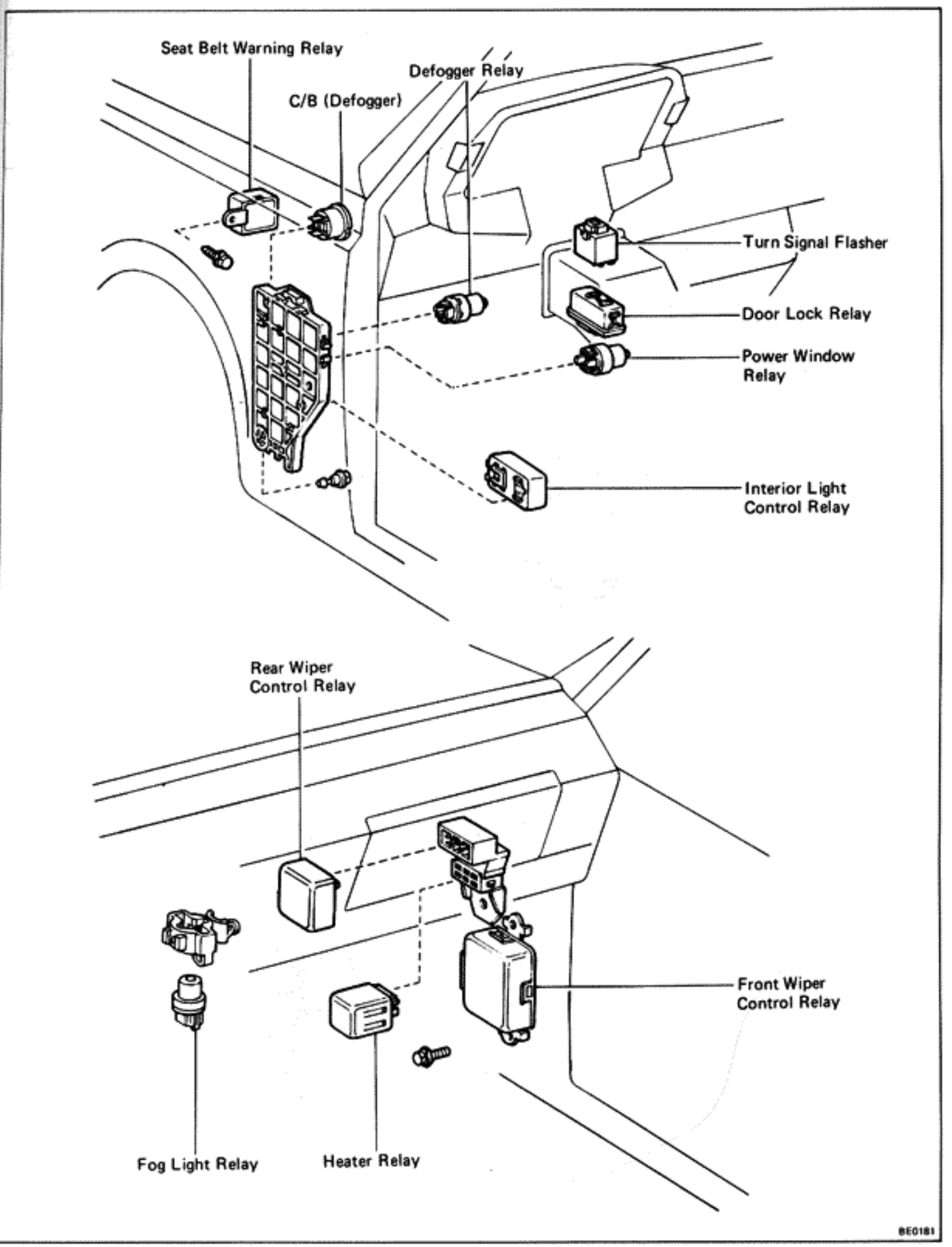

PASSENGER AND LUGGAGE COMPARTMENT SWITCHES AND RELAYS

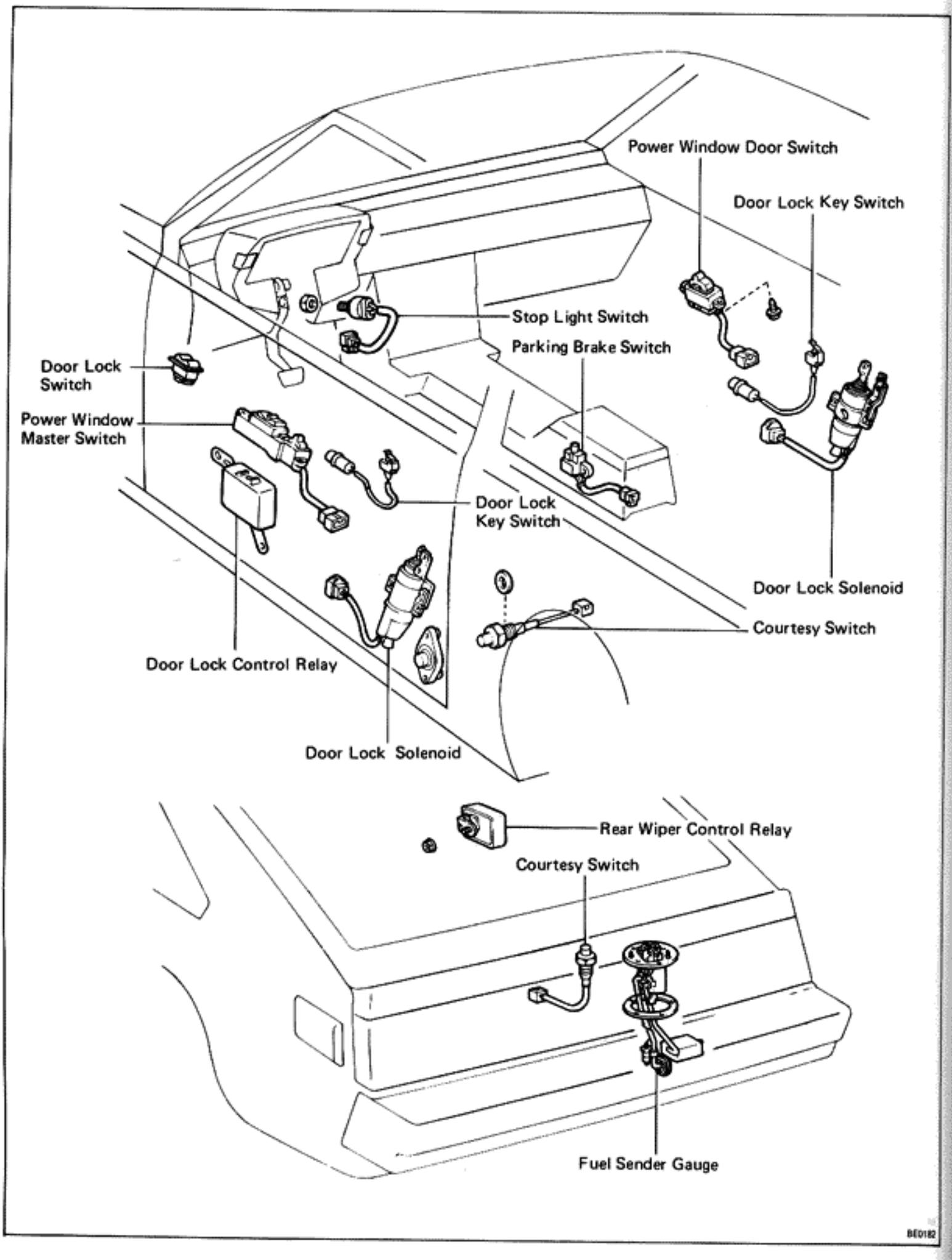

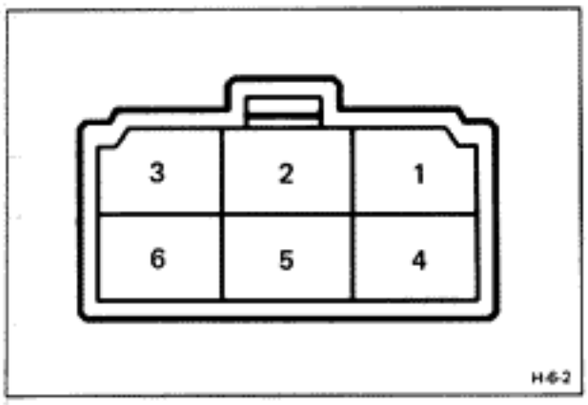

IGNITION SWITCH

INSPECTION OF IGNITION SWITCH

INSPECT SWITCH CONTINUITY

Inspect the switch continuity between terminals.

Switch position \ Terminal		1	3	6	4	2	5
LOCK							
ACC		○——	——○				
ON		○——	——○——	——○			
START		○——	——	——○——	——○		
Warning	Normal						
	Push					○——	——○

If continuity is not as specified, replace the switch.

LIGHTING

Troubleshooting

Problem	Possible cause	Remedy	Page
Only one light does not light (all exterior)	Light bulb burned out	Replace bulb	
	Socket, wire or ground faulty	Repair as necessary	
No headlights light	Fusible link blown	Replace fusible link	
	Headlight control relay faulty	Check relay	BE-14
	Light control switch faulty	Check switch	BE-13
	Wiring or ground faulty	Repair as necessary	
High beam headlights or headlight flasher do not operate	Light control switch faulty	Check switch	BE-13
	Wiring faulty	Repair as necessary	
Tail, parking and license light do not light	TAIL fuse blown	Replace fuse and check for short	BE-4
	Fusible link blown	Replace fusible link	
	Taillight control relay faulty	Check relay	BE-14
	Light control switch faulty	Check switch	BE-13
	Wiring or ground faulty	Repair as necessary	
Stop lights do not light	STOP fuse blown	Replace fuse and check for short	BE-4
	Stop light switch faulty	Adjust or replace switch	
	Wiring or ground faulty	Repair as necessary	
Stop lights stay on	Stop light switch faulty	Adjust or replace switch	
Instrument lights do not light (taillights light)	Light control rheostat faulty	Check rheostat	BE-17, 18
	Wiring or ground faulty	Repair as necessary	
Turn signal does not flash on one side	Turn signal switch faulty	Check switch	BE-18
	Wiring or ground faulty	Repair as necessary	
Turn signals do not operate	TURN fuse blown	Replace fuse and check for short	BE-4
	Turn signal flasher faulty	Check flasher	BE-19
	Turn signal/hazard switch faulty	Check switch	BE-18
	Wiring or ground faulty	Repair as necessary	
Hazard warning lights do not operate	HAZ-HORN fuse blown	Replace fuse and check for short	BE-4
	Turn signal flasher faulty	Check flasher	BE-19
	Turn signal/hazard switch faulty	Check switch	BE-18
	Wiring or ground faulty	Repair as necessary	

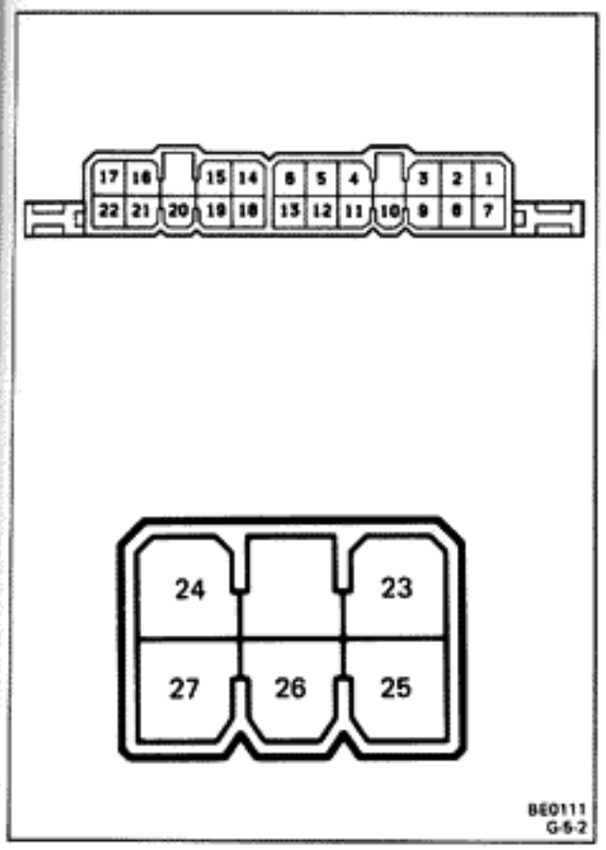

Light Control Switch and Headlight Dimmer Switch

INSPECTION OF LIGHT CONTROL SWITCH AND HEADLIGHT DIMMER SWITCH

INSPECT CONTINUITY OF LIGHT CONTROL SWITCH AND HEADLIGHT DIMMER SWITCH

Light control switch

Switch position \ Terminal (Wire color)	10 E_L (W)	11 T (Y)	4 H (R)	26 U (LG-B)
OFF				
UP	○			○
TAIL	○	○		○
HEAD	○	○	○	

Headlight dimmer switch

Switch position \ Terminal (Wire color)	13 E_D (W-B)	6 H_L (R-G)	5 H_U (R-Y)	12 H_F (R-W)
Flash	○		○	○
Low Beam	○	○		
High Beam	○		○	

If continuity is not as specified, replace the switch.

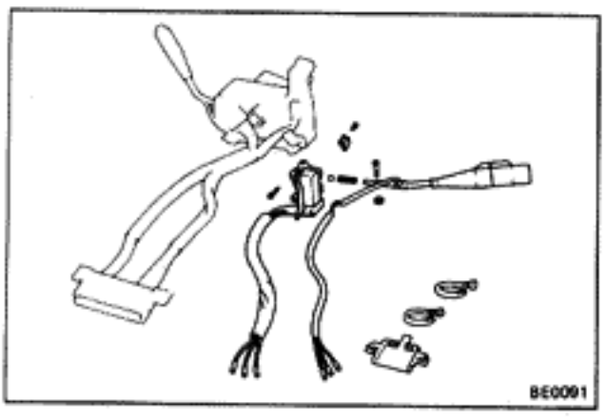

REPLACEMENT OF LIGHT CONTROL SWITCH AND HEADLIGHT DIMMER SWITCH

REPLACE LIGHT CONTROL SWITCH AND HEADLIGHT DIMMER SWITCH

(a) Remove the terminals from the connector. (See page BE-2)

(b) Remove the light control switch.

(c) Remove the headlight dimmer switch.

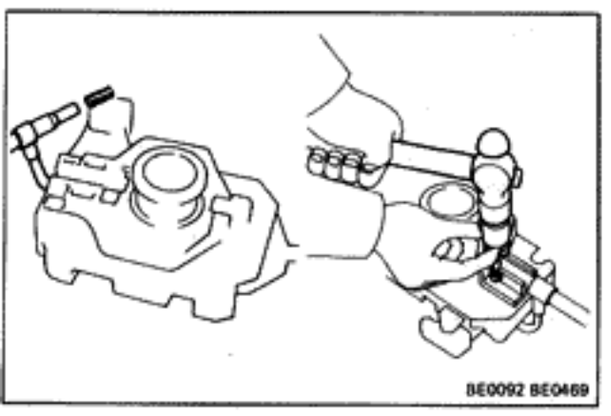

(d) Install the headlight dimmer switch.

(e) Insert the spring into the lever and install the lever with the pin and E-ring.

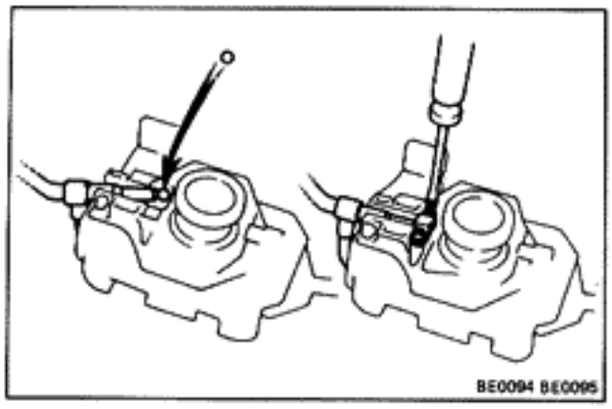

(f) Place the ball on the spring, position the lever at HI, and install the plate.

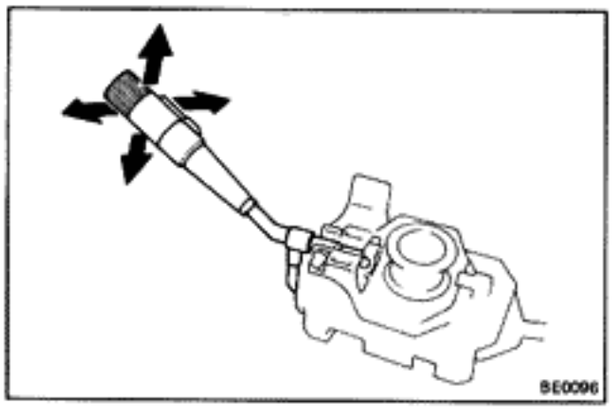

(g) Insure that the switch operates smoothly.

(h) Connect the terminals to the connector. (See pages BE-3 and 13)

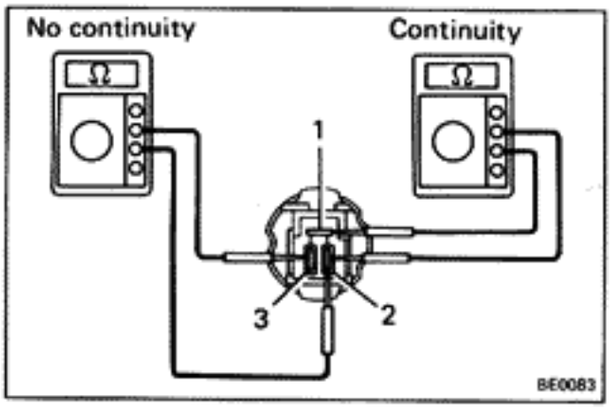

Light Control Relays (Headlight and Taillight)

INSPECTION OF LIGHT CONTROL RELAY

1. INSPECT RELAY CONTINUITY

(a) Check that there is continuity between terminals 1 and 2.

(b) Check that there is no continuity between terminals 2 and 3.

If continuity is not as specified, replace the relay.

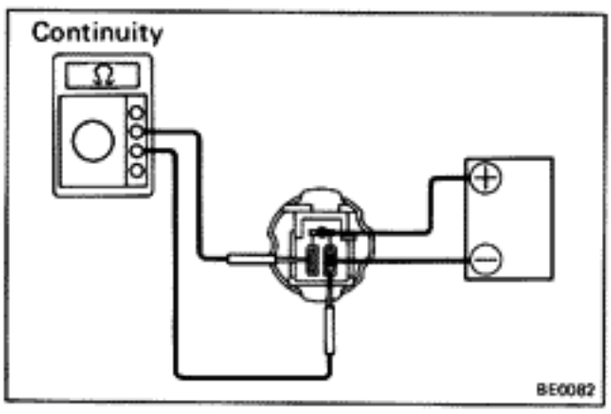

2. INSPECT RELAY OPERATION

(a) Apply battery voltage across terminals 1 and 2.

(b) Check that there is continuity between terminals 2 and 3.

If operation is not as specified, replace the relay.

Light Retractor Relay

INSPECTION OF LIGHT RETRACTOR RELAY

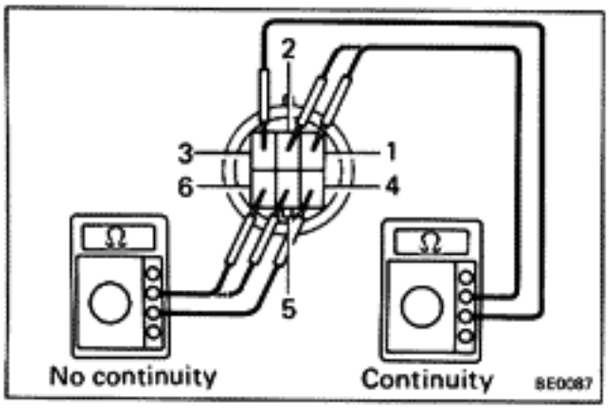

1. INSPECT RELAY CONTINUITY

(a) Check that there is continuity between terminals 1 and 2 and also between terminals 1 and 3.

(b) Check that there is continuity between terminals 4 and 5 and also between terminals 4 and 6.

(c) Check that there is no continuity between terminals 3 and 4.

If continuity is not as specified, replace the relay.

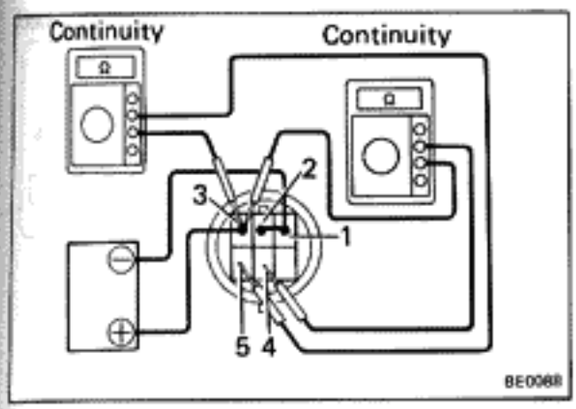

2. INSPECT RELAY OPERATION

(a) Connect the positive (+) lead from the battery to terminal 3. Connect the negative (–) lead to terminals 1 and 2.

(b) Check the continuity between terminals 3 and 5 and terminals 3 and 6.

If operation is not as specified, replace the relay.

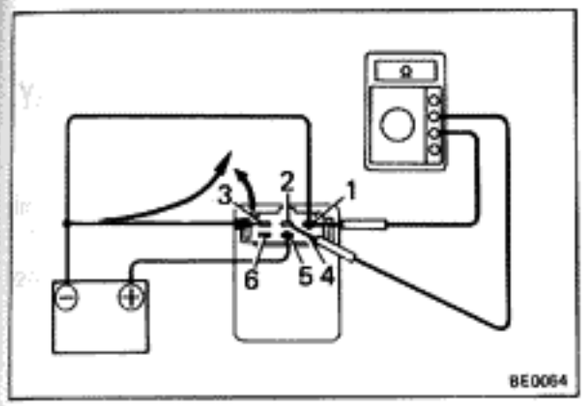

Light Retractor Control Relay

INSPECTION OF LIGHT RETRACTOR CONTROL RELAY

INSPECT RELAY OPERATION

(a) Connect the positive (+) lead from the battery to terminal 5. Connect the negative (–) lead to terminal 1.

(b) Connect the negative (–) lead from the battery to terminal 3. After disconnecting the connection between terminal 3 and battery, check the continuity for 6 – 14 seconds between terminals 1 and 2.

(c) Check the continuity between terminals 1 and 4 after connecting the negative (–) lead from the battery to terminal 6. After disconnecting the connection between terminal 6 and the battery, check that there is continuity for 2 – 4 seconds between terminals 1 and 4, and continuity immediately for 6 – 14 seconds between terminals 1 and 2.

If operation is not as specified, replace the relay.

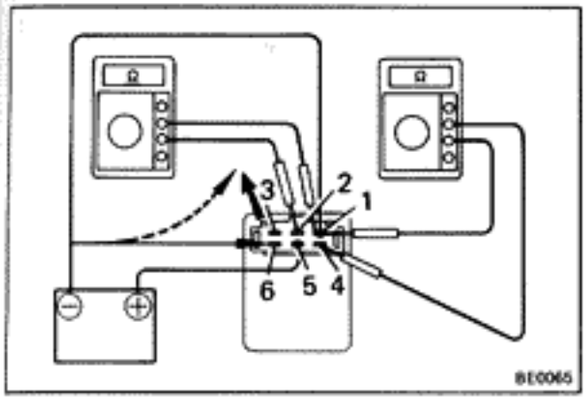

Light Retractor Motor

INSPECTION OF LIGHT RETRACTOR MOTOR

1. INSPECT MOTOR OPERATION

Connect the positive (+) lead from the battery to terminal 2 and connect the negative (–) lead to terminal 1. Check that the motor runs.

If there is no motor operation, replace the motor.

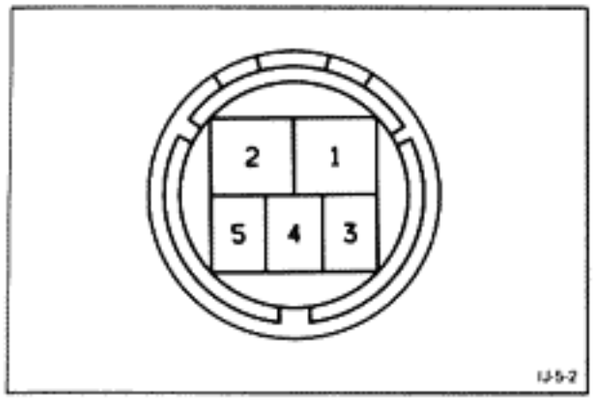

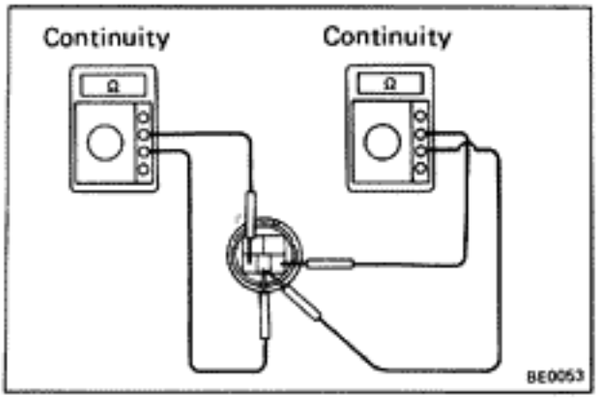

2. INSPECT DIODE CONTINUITY OF MOTOR

(a) Move the headlights to any position except the uppermost or lowermost position.

(b) Connect the ohmmeter positive (+) lead to terminal 4 and the negative (–) lead to terminal 5.

(c) Connect the ohmmeter positive (+) lead to terminal 4 and the negative (–) lead to terminal 3.

If there is no continuity, replace the motor assembly.

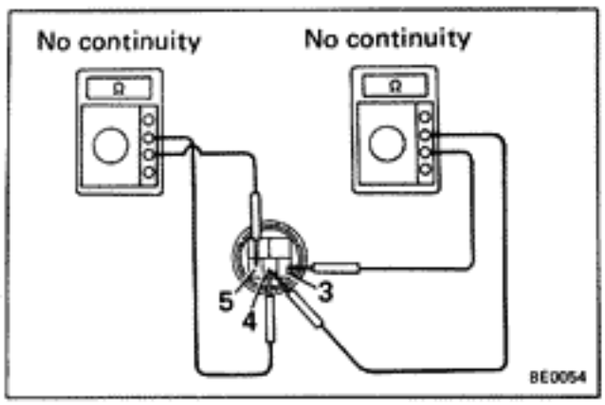

(d) Reverse the test leads of the ohmmeter and inspect continuity.

If there is continuity, replace the motor assembly.

Headlight Retainer Relay

INSPECTION OF HEADLIGHT RETAINER RELAY

1. INSPECT HEADLIGHT CIRCUIT OPERATION

Connect the positive (+) leads from the battery to terminals 4 and 7. Connect the negative (–) lead to terminal 2. Connect the 3.4W test bulb between terminal 8 and positive (+) lead from the battery.

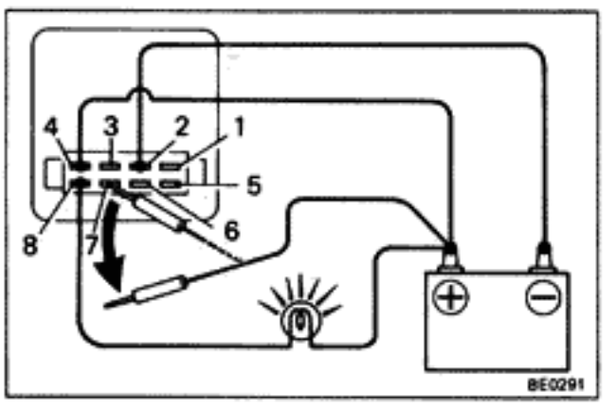

(a) Disconnect the positive (+) lead from the terminal 7. Check that the test bulb is lighting.

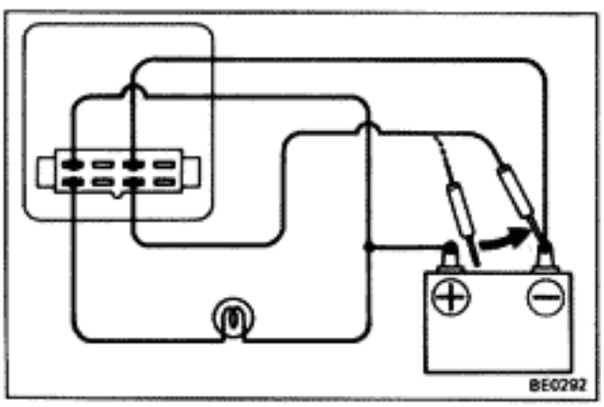

(b) Connect the negative (–) lead to the terminal 6. Check that the test bulb does not light.

If operation is not as specified, replace the relay.

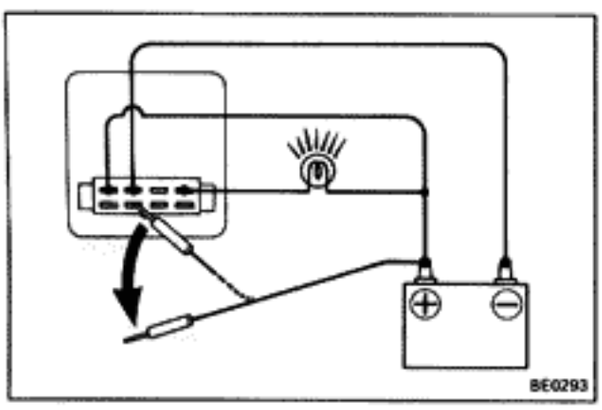

2. INSPECT TAILLIGHT CIRCUIT OPERATION

Connect the positive (+) leads from the battery to terminals 4 and 7. Connect the negative (–) lead to terminal 3. Connect the 3.4W test bulb between terminal 1 and positive (+) lead from the battery.

(a) Disconnect the positive (+) lead from the terminal 7. Check that the test bulb is lighting.

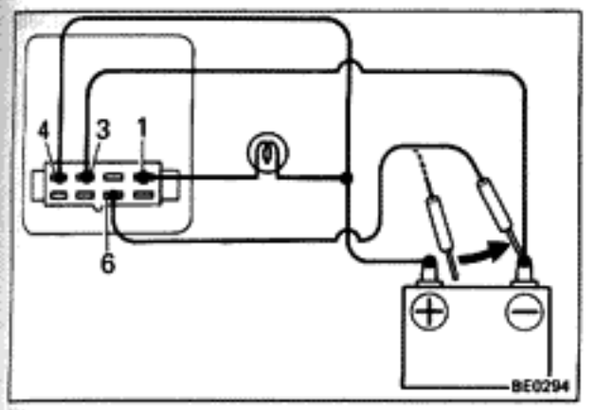

(b) Connect the negative (–) lead to the terminal 6. Check that the test bulb does not light.

If operation is not as specified, replace the relay.

Fog Light Switch

INSPECTION OF FOG LIGHT SWITCH

INSPECT SWITCH CONTINUITY

Inspect the switch continuity between terminals.

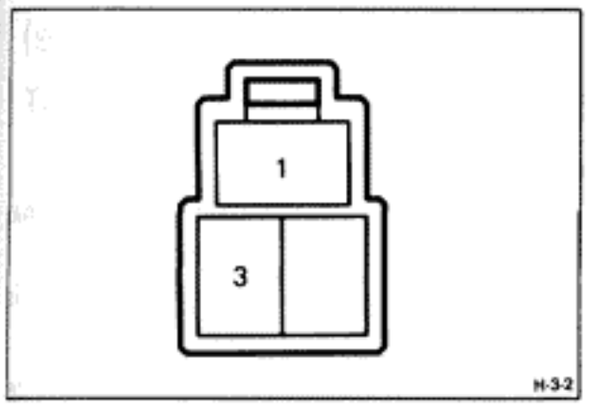

Switch position \ Terminal	1	3
ON	○	○
OFF		

If continuity is not as specified, replace the switch.

Fog Light Relay

INSPECTION OF FOG LIGHT RELAY

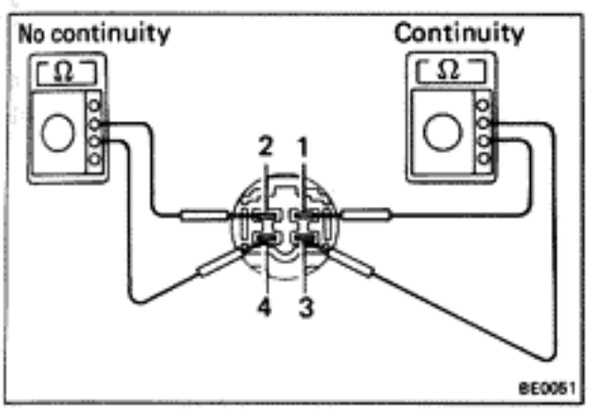

1. INSPECT RELAY CONTINUITY

(a) Check that there is continuity between terminals 1 and 3.

(b) Check that there is no continuity between terminals 2 and 4.

If continuity is not as specified, replace the relay.

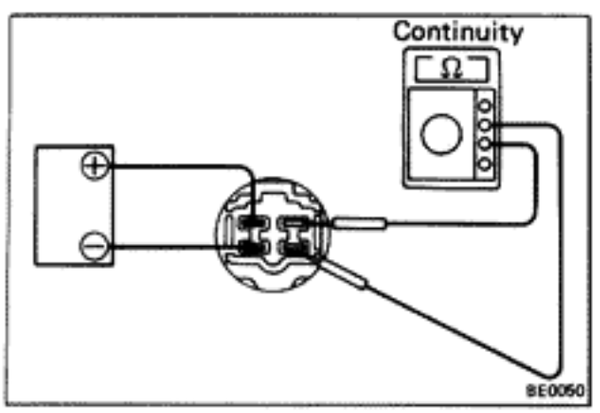

2. INSPECT RELAY OPERATION

(a) Apply battery voltage across terminals 2 and 4.

(b) Check that there is continuity between terminals 1 and 3.

If operation is not as specified, replace the relay.

Light Control Rheostat (Analog Type)

INSPECTION OF LIGHT CONTROL RHEOSTAT

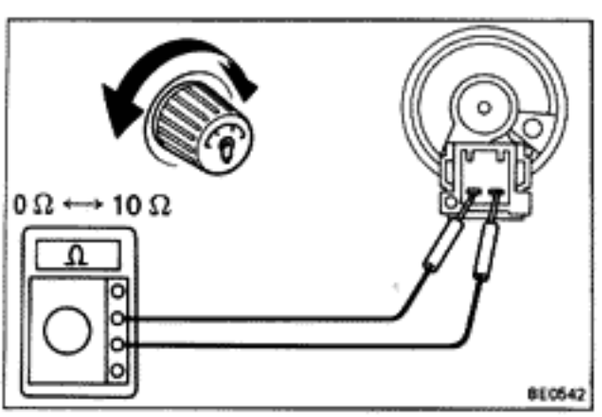

INSPECT RHEOSTAT OPERATION

(a) Gradually change the brightness of rheostat from maximum to minimum, check that the resistance between terminals increases from 0 Ω to 10 Ω.

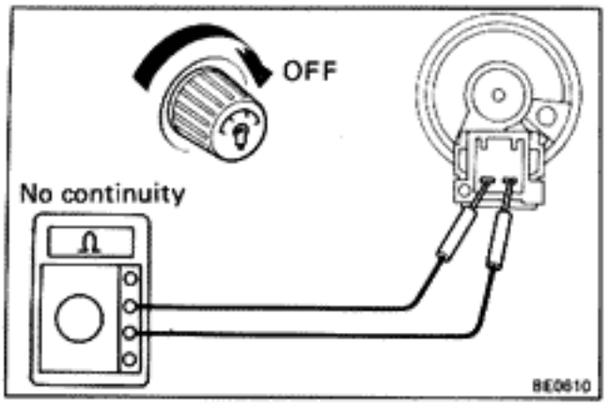

(b) Check that there is no continuity between terminals with the rheostat turned off.

If operation is not as specified, replace the rheostat.

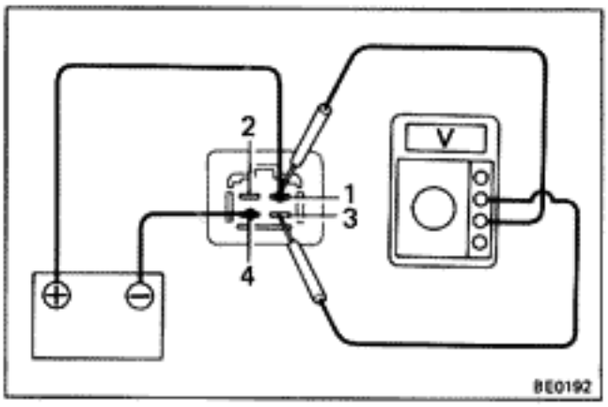

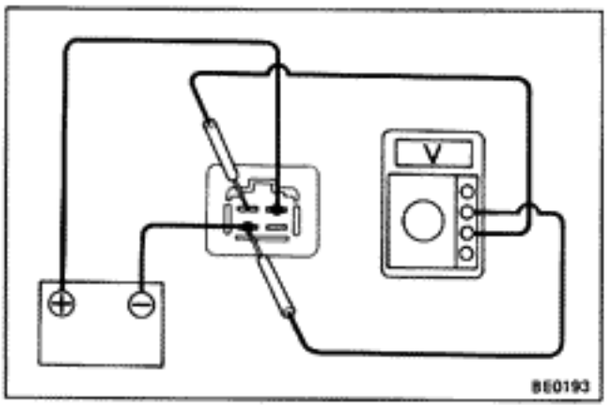

Light Control Rheostat (Digital Type)

INSPECTION OF LIGHT CONTROL RHEOSTAT

INSPECT RHEOSTAT OPERATION

Connect the positive (+) lead from the battery to terminal 1. Connect the negative (–) lead to terminal 4.

(a) With the brightness at minimum, check that there is 9V between terminals 1 and 3.

(b) Gradually turn the rheostat toward the brighter side and check that the voltage between terminals 1 and 3 decreases from 9V to 0V.

(c) With the brightness at minimum, check that there is 0V between terminals 2 and 4 and 12V when brightness is at any other level.

If operation is not as specified, replace the rheostat.

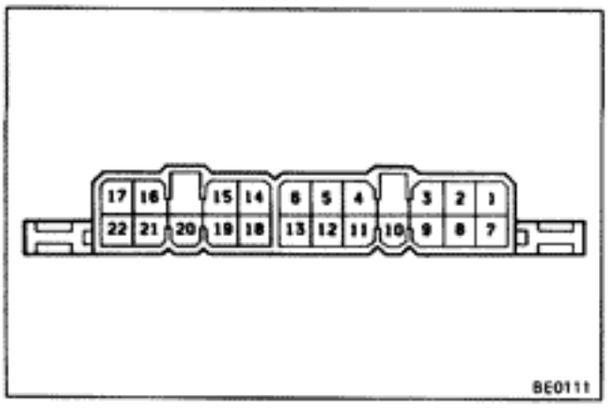

Turn Signal and Hazard Warning Switch

INSPECTION OF TURN SIGNAL AND HAZARD WARNING SWITCH

INSPECT TURN SIGNAL AND HAZARD WARNING SWITCH CONTINUITY

Switch position \ Terminal (Wire color)		9 T_L (G-B)	3 T_B (G-W)	8 T_R (G-Y)	2 B_1 (G-L)	7 F (G)	1 B_2 (G-O)
Turn Signal	L	○—○			○—○		
	N				○—○		
	R		○—○		○—○		
Hazard	ON	○—○	○—○			○—○	

If continuity is not as specified, replace the switch.

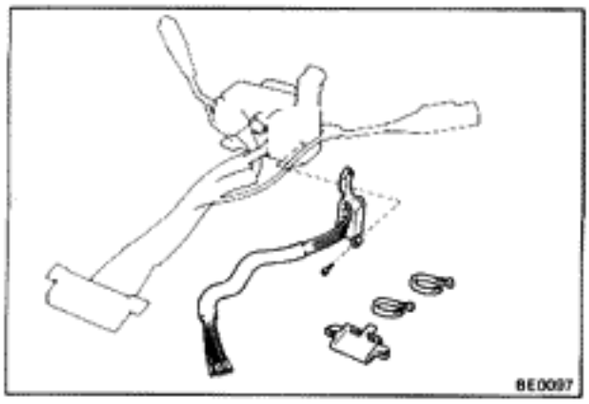

REPLACEMENT OF TURN SIGNAL AND HAZARD WARNING SWITCH

REPLACE TURN SIGNAL AND HAZARD WARNING SWITCH

(a) Remove the terminals from the connector. (See page BE-2)

(b) Remove the turn signal and hazard switch.

(c) Install the turn signal and hazard switch.

(d) Connect the terminals to the connector. (See pages BE-3 and 18)

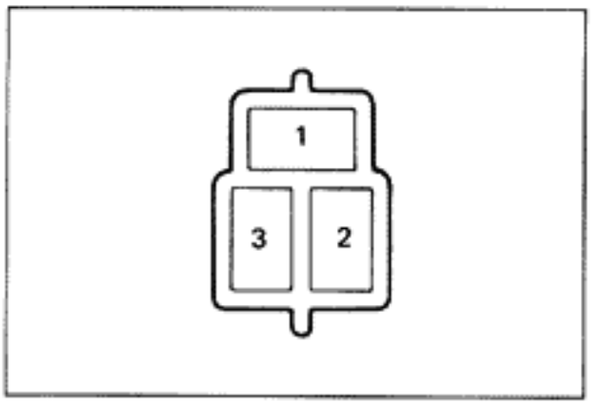

Turn Signal Flasher

INSPECTION OF TURN SIGNAL FLASHER

INSPECT FLASHER OPERATION

(a) Connect the positive (+) lead from the battery to terminal 3. Connect the negative (–) lead to terminal 2.

(b) Connect a 55W bulb between terminals 1 and 2, and check that the bulb goes on and off.

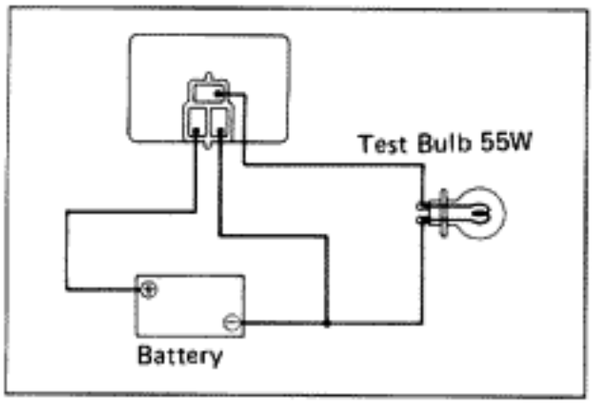

NOTE: The turn signal lights should flash 75 to 95 times per minute.

If one of the front or rear turn signal lights has an open circuit, the number of flashes will be more than 120 per minute.

If one of the side turn signal lights has an open circuit, the number of flashes will increase by about 10 per minute.

If operation is not as specified, replace the flasher.

Fade-Out Relay

INSPECTION OF FADE-OUT RELAY

1. INSPECT COURTESY SWITCH CIRCUIT OPERATION

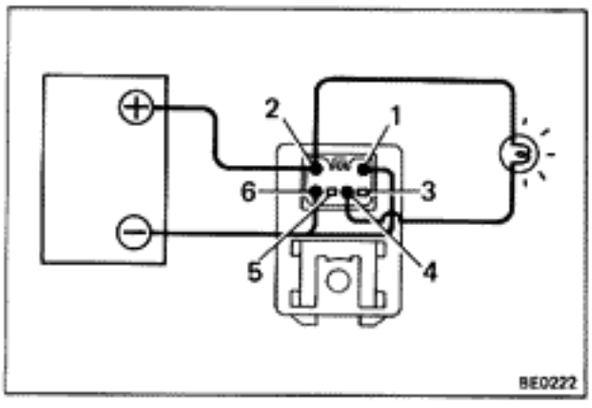

Connect the positive (+) lead from the battery to terminal 2. Connect the negative (–) lead to terminals 1 and 6. Connect a 3.4W test bulb between terminals 2 and 4.

(a) Check that the bulb lights.

(b) Disconnect the negative (–) lead from terminal 1, and check that the bulb fades out about 8.5 seconds later.

If operation is not as specified, replace the relay.

2. INSPECT OUTSIDE HANDLE SWITCH CIRCUIT OPERATION

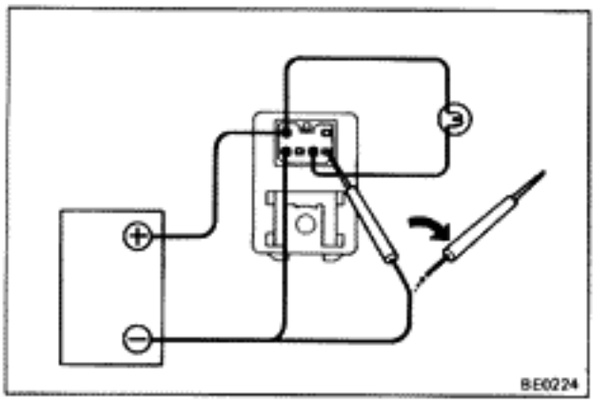

Connect the positive (+) lead from battery to terminal 2. Connect the negative (–) lead to terminals 3 and 6. Connect a 3.4 W test bulb between terminals 2 and 4.

Disconnect the negative (–) lead from terminal 3, and check that the bulb fades out about 8.5 seconds later.

If operation is not as specified, replace the relay.

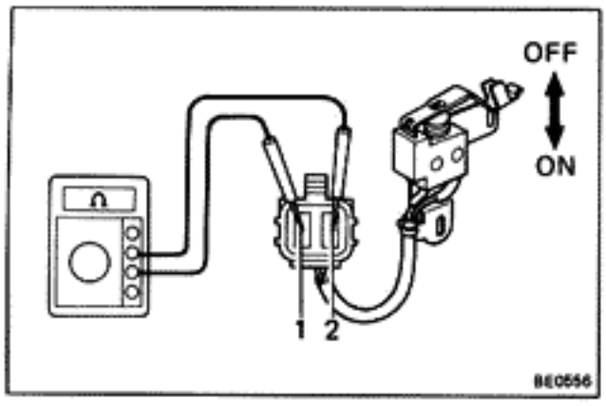

Outside Handle Switch

INSPECTION OF OUTSIDE HANDLE SWITCH

INSPECT SWITCH CONTINUITY

(a) Check that there is continuity between terminals 1 and 2 when the switch is on.

(b) Check that there is no continuity between terminals 1 and 2 when the switch is off.

If continuity is not as specified, replace the switch.

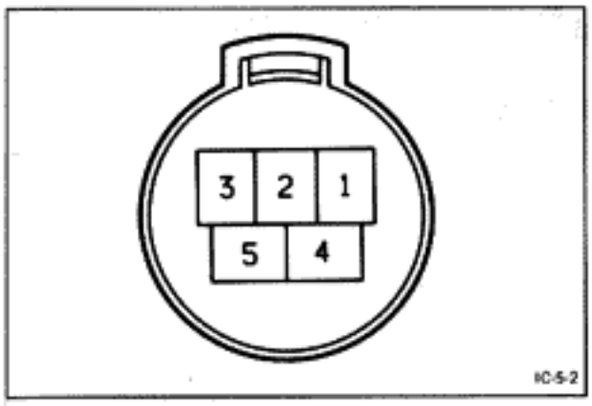

HEADLIGHT CLEANER

Headlight Cleaner Control Relay

ON-VEHICLE INSPECTION OF HEADLIGHT CLEANER CONTROL RELAY

INSPECT RELAY OPERATION

(a) Check that there is continuity between terminal 2 and body ground with the washer switch "ON".

(b) Check that there is battery voltage between terminal 3 and body ground with the light control switch at "TAIL" or "HEAD".

(c) Check that there is continuity between terminal 5 and body ground for about 0.5 seconds when the light control switch is at "TAIL" or "HEAD" and the washer switch is pushed twice in succession.

If operation is not as specified, replace the relay.

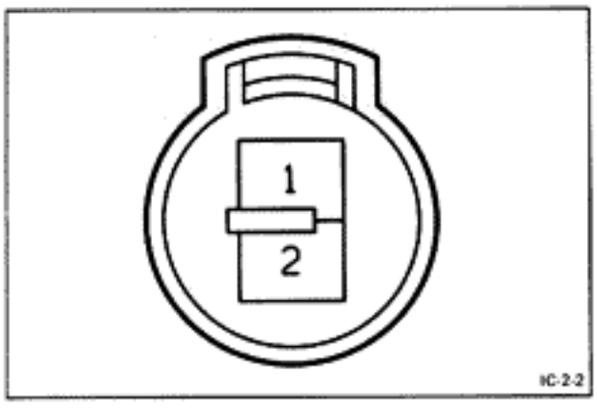

Cleaner Motor

INSPECTION OF CLEANER MOTOR

INSPECT MOTOR OPERATION

(a) Connect the positive (+) lead from the battery to terminal 1. Connect the negative (–) lead to terminal 2.

(b) Check that the motor operates.

CAUTION: These tests must be performed quickly (within 3 – 5 seconds) to prevent the coil from burning out.

If operation is not as specified, replace the motor.

WIPERS AND WASHERS

Troubleshooting

Problem	Possible cause	Remedy	Page	
			Front	Rear
Wipers do not operate or return to off position	WIPER fuse blown	Replace fuse and check for short	BE-4	BE-4
	Wiper motor faulty	Check motor	BE-24	BE-25
	Wiper switch faulty	Check switch	BE-22	BE-25
	Wiring or ground faulty	Repair as necessary		
Wipers do not operate in INT position	Wiper relay faulty	Check relay	BE-23	BE-25
	Wiper switch faulty	Check switch	BE-22	BE-25
	Wiper motor faulty	Check motor	BE-24	BE-25
	Wiring or ground faulty	Repair as necessary		
Washers do not operate	Washer hose or nozzle clogged	Repair as necessary		
	Washer motor faulty	Replace motor		
	Wiper switch faulty	Check switch	BE-22	BE-25
	Wiring faulty	Repair as necessary		

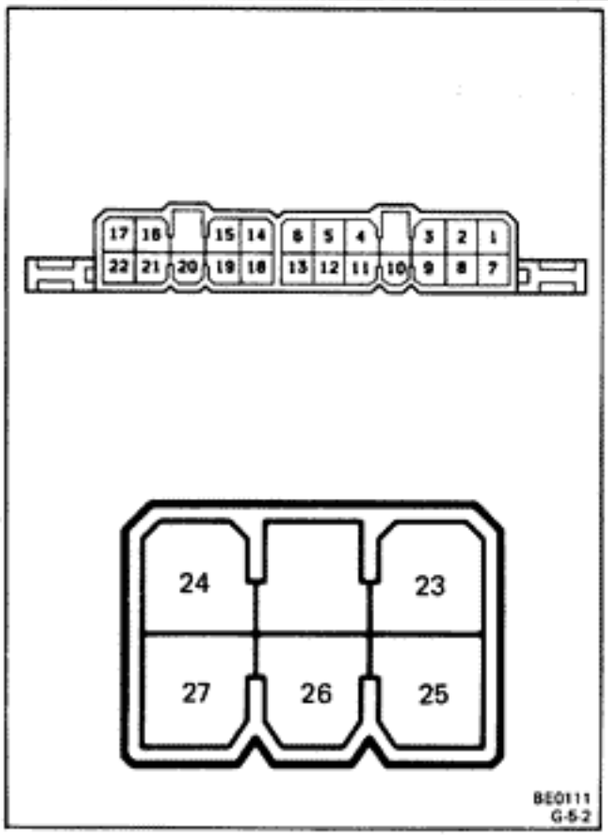

Front Wiper and Washer Switch

INSPECTION OF FRONT WIPER AND WASHER SWITCH

INSPECT FRONT WIPER AND WASHER SWITCH CONTINUITY

Switch	Terminal (Wire color) / Switch position	15 W (L)	19 C_1 (LG-R)	14 Ew (B)	16 -S (LG)	20 +S (L-R)	26 C_2 (LG-B)	21 +1 (L-B)	17 +B (L-W)	22 +2 (L-O)	25 VR_1 (Y)	27 VR_2 (Y)
Wiper	OFF			○—○		○—○						
	INT		○—○				○—○					
	LO							○—○				
	HI								○—○			
Washer	OFF											
	ON	○—○		○								
INT Time Control	SLOW	50 kΩ									○—○	
	•	34.75 kΩ									○—○	
	•	15.75 kΩ									○—○	
	FAST	0 kΩ									○—○	

If continuity is not as specified, replace the switch.

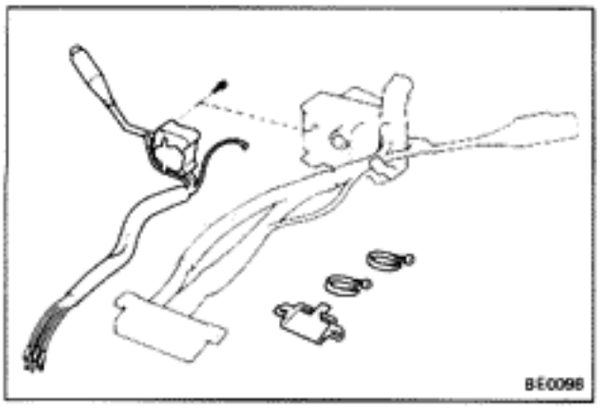

REPLACEMENT OF FRONT WIPER AND WASHER SWITCH

REPLACE WIPER AND WASHER SWITCH

(a) Remove the terminals from the connector. (See page BE-2)

(b) Remove the wiper control switch and washer switch.

(c) Install the wiper control switch and washer switch.

(d) Connect the terminals to the connector. (See pages BE-3 and 22)

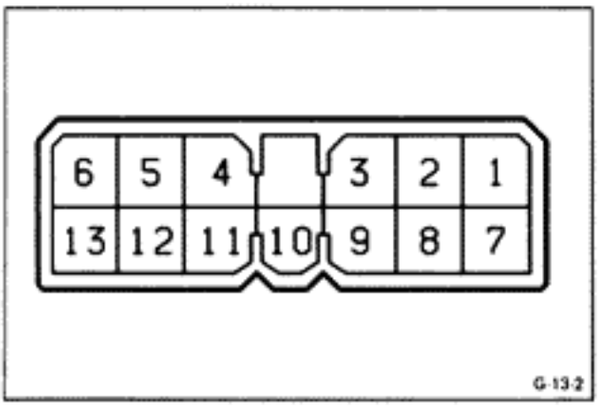

Front Wiper and Washer Relay

INSPECTION OF FRONT WIPER AND WASHER RELAY

1. INSPECT INTERMITTENT OPERATION OF RELAY

(a) Connect the positive (+) lead from the battery to terminal 12. Connect the negative (–) lead to terminals 10 and 11.

(b) Inspect continuity between terminals 6 and 12 as follows.

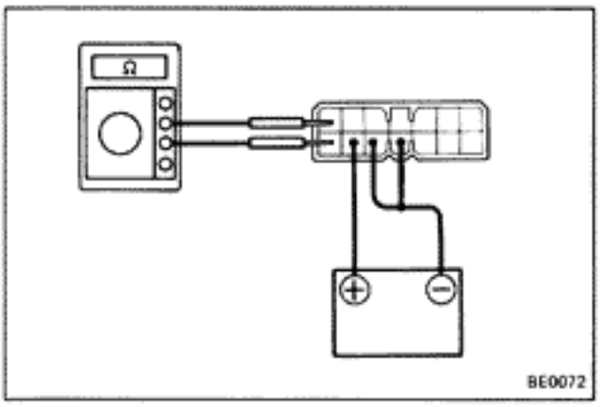

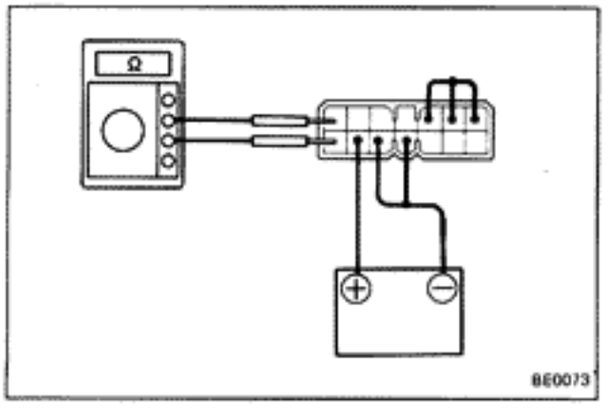

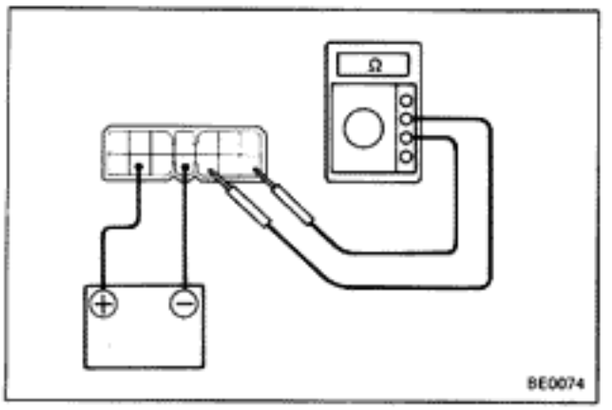

Disconnect terminals 1, 2 and 3		Connect terminals 1, 2 and 3	
Time (seconds)	Between terminals 6 and 12	Time (seconds)	Between terminals 6 and 12
Connect terminals 10 and 11		Connect terminals 10 and 11	
$1.2\ ^{+0.3}_{-0.2}$	Continuity	$1.2\ ^{+0.3}_{-0.2}$	Continuity
4.3 ± 1	Continuity	2 ± 0.6	Continuity
$0.7\ ^{+0.4}_{-0.5}$	Continuity	$0.7\ ^{+0.4}_{-0.5}$	Continuity
4.3 ± 1	Continuity	2 ± 0.6	Continuity

2. INSPECT WASHER CIRCUIT OF RELAY

(a) Connect the positive (+) lead from the battery to terminal 12. Connect the negative (–) lead to terminal 10.

(b) Inspect continuity between terminals 7 and 9 as follows.

Time (seconds)	Between terminals 7 and 9	Time (seconds)	Between terminals 7 and 9
Connect terminals 4 and 10		Disconnect terminals 4 and 10	
over 1	Continuity → No Continuity	3.7 ± 1	Continuity → No Continuity

If continuity is not as specified, replace the relay.

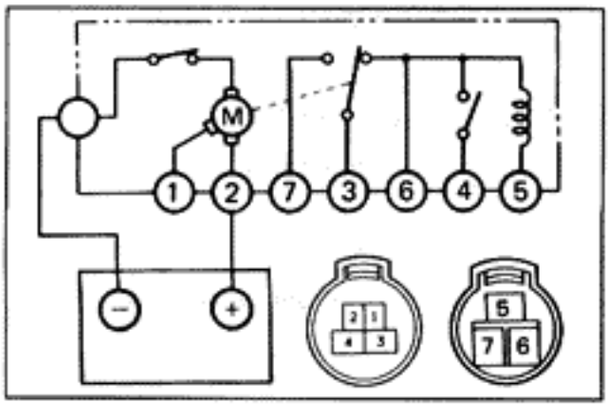

Front Wiper Motor

INSPECTION OF FRONT WIPER MOTOR

1. INSPECT THAT MOTOR OPERATES AT LOW SPEED

(a) Disconnect the connector from the wiper motor.

(b) Connect the positive (+) lead from the battery to terminal 2. Connect the negative (–) lead to the motor body.

(c) Check that the motor operates at low speed.

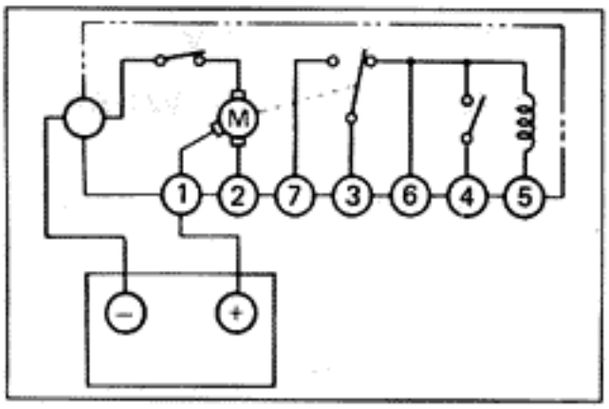

2. INSPECT THAT MOTOR OPERATES AT HIGH SPEED

(a) Disconnect the connector from the wiper motor.

(b) Connect the positive (+) lead from the battery to terminal 1. Connect the negative (–) lead to the motor body.

(c) Check that the motor operates at high speed.

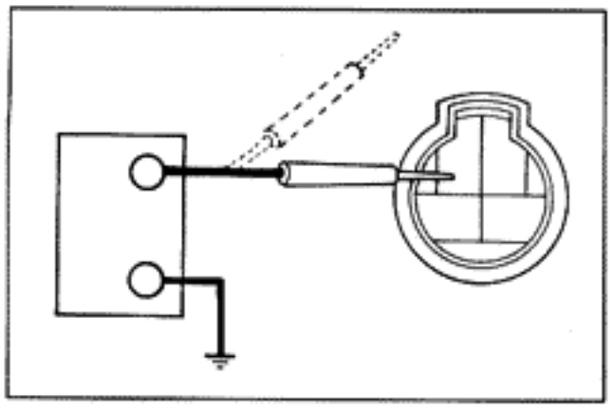

3. INSPECT THAT MOTOR OPERATES, STOPPING AT RAISED POSITION

(a) Connect the positive (+) lead from the battery to terminal 2. Connect the negative (–) lead to the motor body.

(b) Operates the motor at low speed.

(c) Stop the motor operation to disconnect the battery terminals except at the raised position.

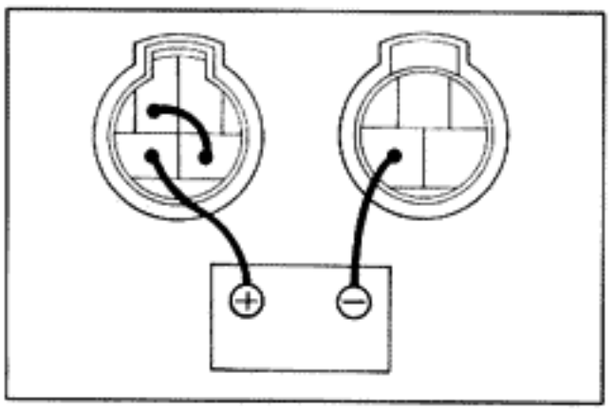

(d) Connect terminals 2 and 3.

(e) Connect the positive (+) lead from the battery to terminal 4. Connect the negative (–) lead to terminal 7.

(f) Inspect that the motor stops running at raised position after the motor operate again.

If operation is not as specified, replace the motor.

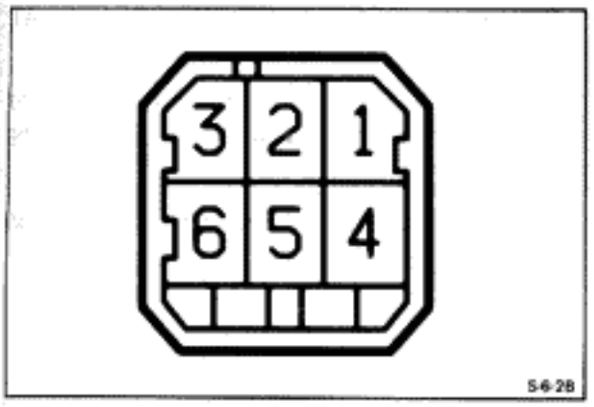

Rear Wiper and Washer Switch

INSPECTION OF REAR WIPER AND WASHER SWITCH

INSPECT SWITCH CONTINUITY

Inspect the continuity between terminals for each switch position shown in the table below.

Switch position \ Terminal	5	4	3	2	6	1
Washer (INT side)	○—○		○—○		○—○	
INT	○—○		○—○			
OFF	○—○					
ON		○——	——	——	——○	
Washer (ON side)		○——	——	——	——○	○

If continuity is not as specified, replace the switch.

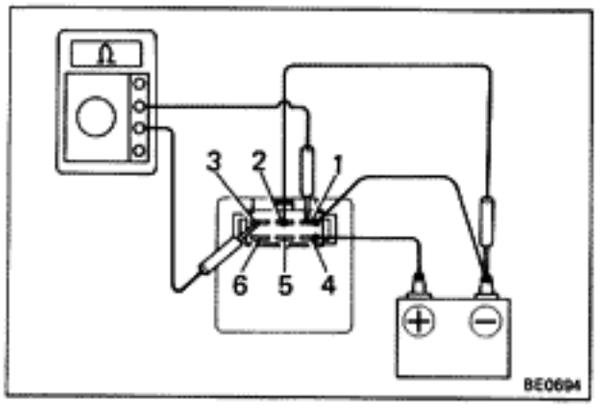

Rear Wiper Relay

INSPECTION OF REAR WIPER RELAY

INSPECT RELAY OPERATION

Connect the positive (+) lead from the battery to terminal 1. Connect the negative (–) lead to terminal 4.

(a) With connect the positive (+) lead from the battery to terminal 2, check that there is no continuity between terminals 1 and 3.

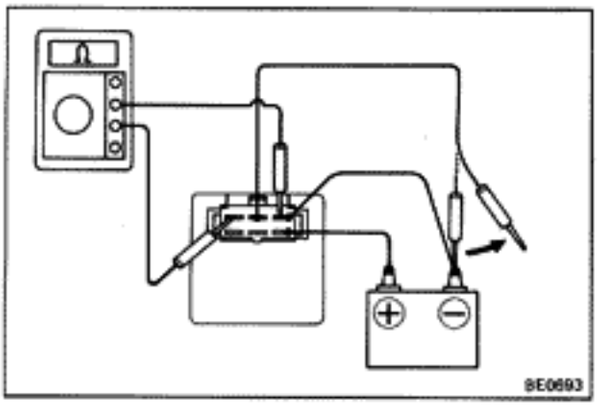

(b) With disconnect terminal 2, check that there is no continuity between terminals 1 and 3 for 9 – 15 seconds.

If operation is not as specified, replace the relay.

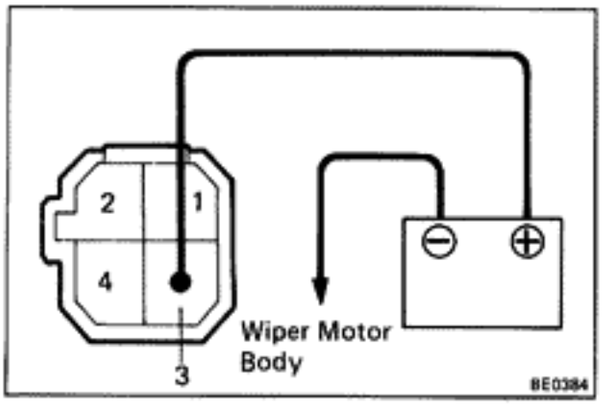

Rear Wiper Motor

INSPECTION OF REAR WIPER MOTOR

1. INSPECT THAT MOTOR OPERATES

(a) Connect the positive (+) lead from the battery to terminal 3. Connect the negative (–) lead to the motor body.

(b) Check that the motor operates.

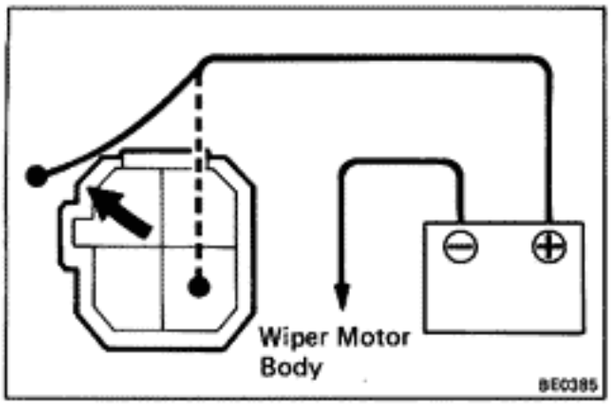

2. **INSPECT THAT MOTOR OPERATES, STOPPING AT STOP POSITION**

(a) Connect the positive (+) lead from the battery to terminal 3. Connect the negative (–) lead to the motor body. Operates the motor.

(b) Stop motor operation anywhere except stop position by disconnecting terminal 3.

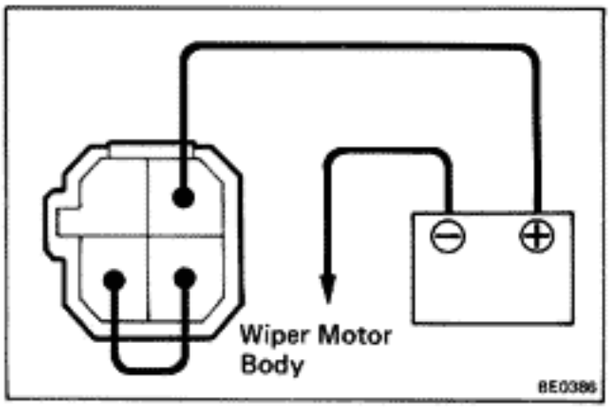

(c) Connect terminals 3 and 4.

(d) Connect the positive (+) lead from the battery to terminal 1.

(e) Check that the motor stops running at stop position after the motor operates again.

If operation is not as specified, replace the motor.

INSTRUMENTS AND SENDER GAUGES

Troubleshooting

Problem	Possible cause	Remedy	Page
Voltmeter does not work	Fuses blown	Replace in-line fuses and check for short	BE-4
	Faulty	Check voltmeter	BE-29
	Wiring faulty	Repair as necessary	
Tachometer does not work	GAUGE fuse blown	Replace fuse and check for short	BE-4
	Tachometer faulty	Check tachometer	BE-29
	Wiring faulty	Repair as necessary	
Fuel receiver gauge does not work	GAUGE fuse blown	Replace fuse and check for short	BE-4
	Fuel receiver gauge faulty	Check receiver gauge	BE-30
	Sender gauge faulty	Check sender gauge	BE-30
	Wiring or ground faulty	Repair as necessary	
Water temperature receiver gauge does not work	GAUGE fuse blown	Replace fuse and check for short	BE-4
	Water temperature receiver gauge faulty	Check receiver gauge	BE-31
	Water temperature sender gauge faulty	Check sender gauge	BE-31
	Wiring or ground faulty	Repair as necessary	
Oil pressure receiver gauge does not work	GAUGE fuse blown	Replace fuse and check for short	BE-4
	Oil pressure receiver gauge faulty	Check receiver gauge	BE-32
	Oil pressure sender gauge faulty	Check sender gauge	BE-32
	Wiring or ground faulty	Repair as necessary	
Brake warning light does not light	GAUGE fuse blown	Replace fuse and check for short	BE-4
	Bulb burned out	Replace bulb	
	Brake fluid level warning switch faulty	Check switch	BE-32
	Parking brake switch faulty	Check switch	BE-32
	Wiring or ground faulty	Repair as necessary	
Discharge warning light does not light	IGN fuse blown	Replace fuse and check for short	BE-4
	Bulb burned out	Replace bulb	
	Wiring faulty	Repair as necessary	

Combination Meter and Gauge (Analog Type)

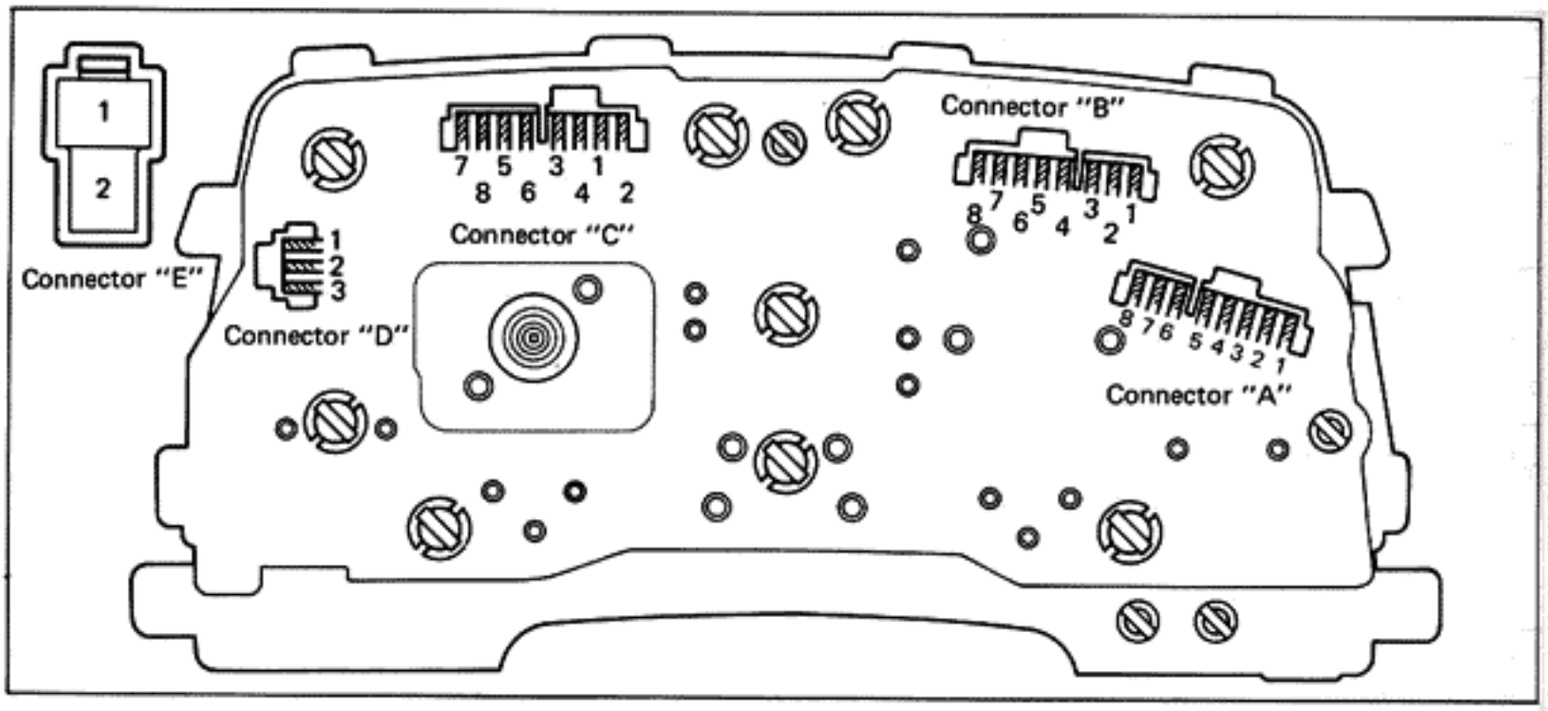

COMBINATION METER CIRCUIT

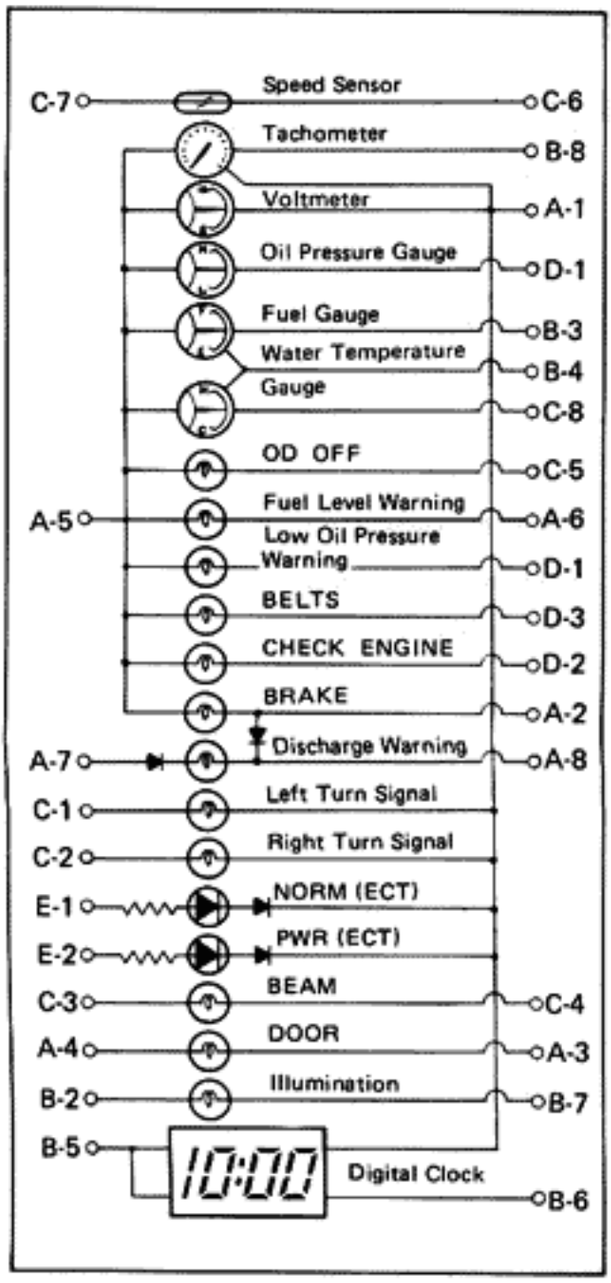

No.		Wiring Connector Sides
A	1	Ground
	2	Parking Brake Switch Terminal 1 and Fluid Level Warning Switch Terminal 1
	3	Door Courtesy Switch
	4	DOME Fuse
	5	GAUGE Fuse
	6	Fuel Level Warning Switch Terminal 1
	7	IGN Fuse
	8	CHARGE Fuse
B	2	TAIL Fuse
	3	Fuel Sender Gauge Terminal 2
	4	Ground
	5	DOME Fuse
	6	CIG Fuse
	7	Light Control Rheostat Terminal 2
	8	Ignition Coil
C	1	Turn Signal Switch Terminal 9
	2	Turn Signal Switch Terminal 8
	3	Dimmer Switch Terminal 5
	4	Ground
	5	OD Relay
	6	Ground
	7	ECU and Cruise Control Computer Terminal 6
	8	Water Temperature Sender Gauge
D	1	Oil Pressure Sender Gauge or Oil Pressure Switch
	2	CPU
	3	Seat Belt Warning Relay
E	1	Pattern Select Switch
	2	Pattern Select Switch

Speedometer

ON-VEHICLE INSPECTION OF SPEEDOMETER

(a) Using a speedometer tester, inspect the speedometer for allowable indicating error and check the operation of the odometer.

NOTE: Tire wear and tire over or under inflation will increase the indicating error.

(b) Check the speedometer for pointer vibration and abnormal noises.

NOTE: Pointer vibration can be caused by a loose speedometer cable.

Standard indication (km/h)	Allowable range (km/h)
20	18 – 23
40	20 – 44
60	60 – 64.5
80	80 – 85
100	100 – 105
120	120 – 125.5
140	140 – 146
160	160 – 167

Standard indication (mph)	Allowable range (mph)
20	20 – 23
40	40 – 43.5
60	60 – 64
80	80 – 84.5
100	100 – 105
120	120 – 125.5

Tachometer

ON-VEHICLE INSPECTION OF TACHOMETER

(a) Connect a tune-up test tachometer and start the engine.

(b) Compare the tester and tachometer indications.

If the error is excessive, replace the tachometer.

CAUTION:

- **Reversing the connection of the tachometer will damage the transistors and diodes inside.**
- **When removing or installing the tachometer, be careful not to drop or subject it to severe shock.**

Temp. \ rpm	1000	3000	5000	7000
25°C DC13V	±100	±200	±200	±300

Voltmeter

INSPECTION OF VOLTMETER

Compare the tester and voltmeter indications.

If the error is excessive, replace the voltmeter.

Fuel Gauge

INSPECTION OF FUEL GAUGE

1. INSPECT RECEIVER GAUGE OPERATION

(a) Disconnect the connector from the fuel sender gauge. Turn the ignition switch on and check that the receiver gauge needle moves to the empty position.

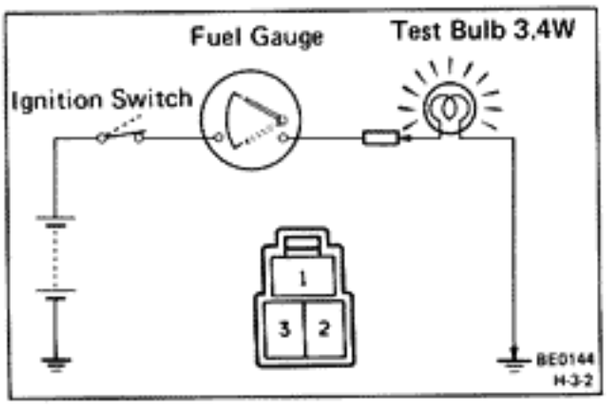

(b) Connect the 3.4W test bulb between terminal 2 and body ground. Check that the bulb lights and the receiver gauge needle operates.

NOTE: Because of the silicon oil in the gauge, it will take about 90 seconds for the needle to stabilize.

If indications are not as specified, remove and test the receiver gauge.

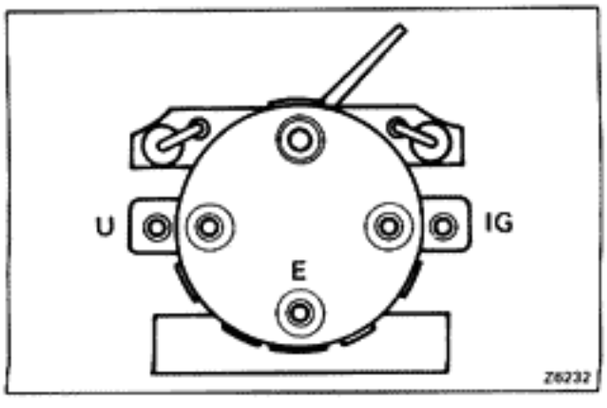

2. MEASURE RECEIVER GAUGE RESISTANCE BETWEEN TERMINALS

Between terminals	Resistance (Ω)
IG – U	Approx. 101.9
U – E	Approx. 101.3
IG – E	Approx. 203.2

If each resistance value is not as shown in the table above, replace the receiver gauge.

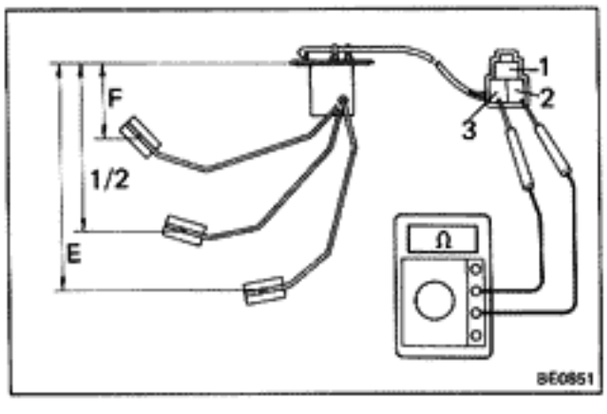

3. MEASURE RESISTANCE OF SENDER GAUGE

(a) Check that the resistance changes as the float is moved from the top to bottom position.

(b) Measure the resistance between terminals 2 and 3 for each float position.

	Float position mm (in.)	Resistance (Ω)
F	43.7 – 49.7 (1.720 – 1.957)	3 ± 2.1
½	135.1 (5.319)	32.5 ± 4.8
E	200.2 – 206.2 (7.882 – 8.118)	110 ± 7.7

If each resistance value is not as shown in the table above, replace the sender gauge.

Fuel Level Warning

INSPECTION OF FUEL LEVEL WARNING

1. INSPECT WARNING LIGHT OPERATION

(a) Disconnect the connector from the switch. Connect the switch terminal 1 and body ground.

(b) Turn the ignition switch on. Check that the bulb lights.

If operation is not as specified, remove and test the bulb.

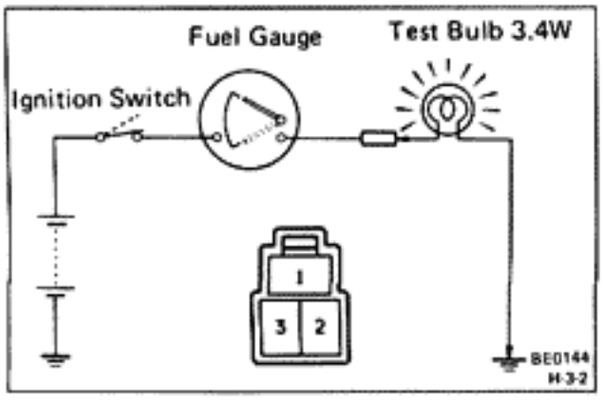

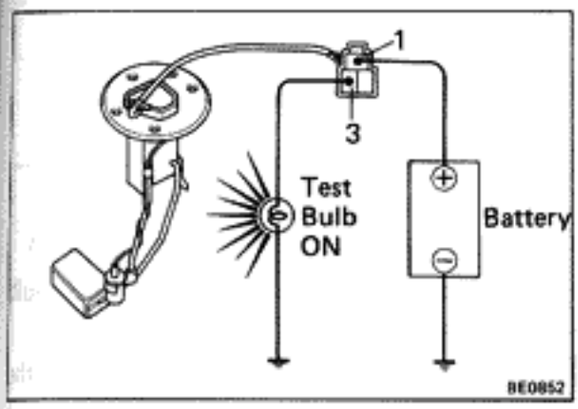

2. INSPECT LEVEL WARNING SWITCH OPERATION

(a) Apply battery voltage between terminals 1 and 3 through a 3.4W bulb. Check that the bulb lights.

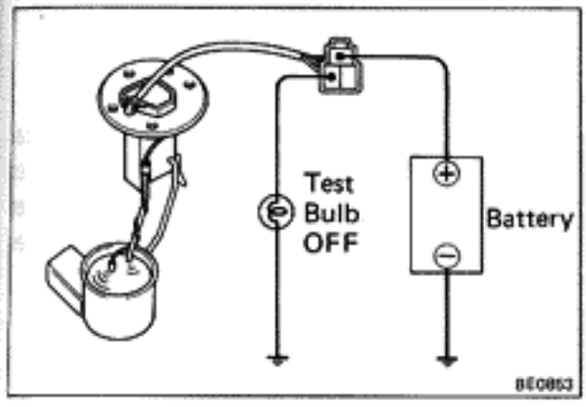

(b) Submerge the switch in gasoline or water. Check that the bulb goes out.

If operation is not as specified, replace the sender gauge.

Water Temperature Gauge

INSPECTION OF WATER TEMPERATURE GAUGE

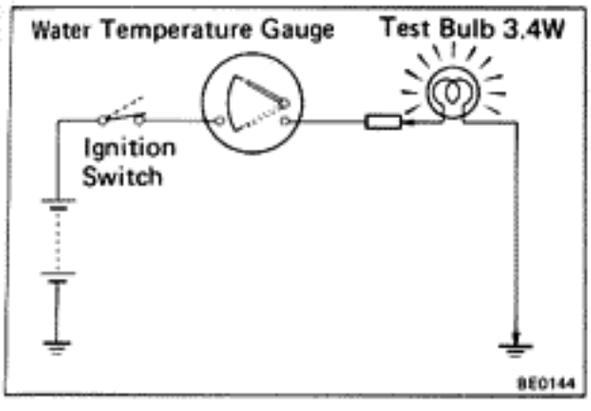

1. INSPECT RECEIVER GAUGE OPERATION

(a) Disconnect the connector from the sender gauge. Ground the terminal through a 3.4W bulb as shown.

(b) Turn the ignition switch on. Check that the bulb lights up and that the receiver gauge needle rises to the upper position.

If indications are not as specified, remove and test the receiver gauge.

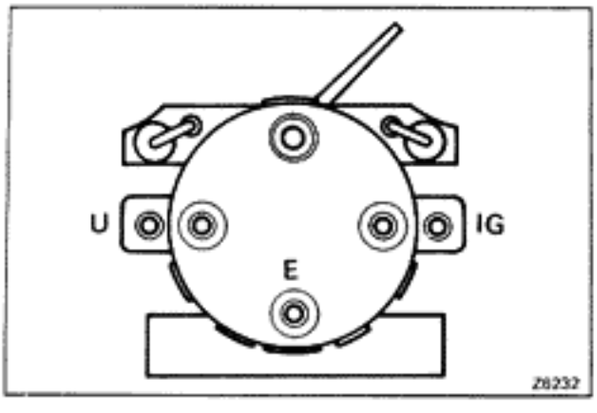

2. MEASURE RESISTANCE OF RECEIVER GAUGE

Using an ohmmeter, measure the resistance between terminals.

If each resistance value is not as shown in the table below, replace the receiver gauge.

Between terminals	Resistance (Ω)
IG – U	Approx. 56
U – E	Approx. 201.8
IG – E	Approx. 145.8

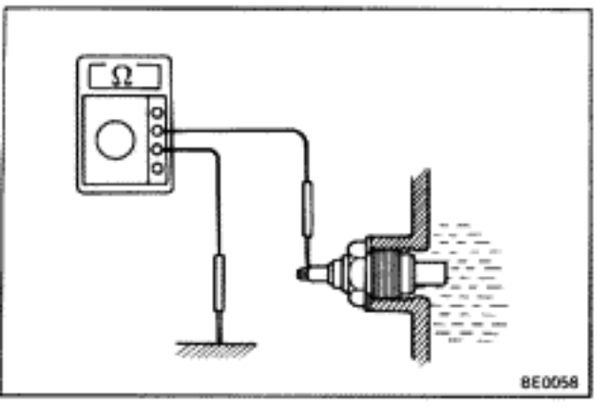

3. MEASURE RESISTANCE OF SENDER GAUGE

Using an ohmmeter, measure the resistance between the terminal and ground.

If each resistance value is not as shown in the table below, replace the sender gauge.

Water temperature °C (°F)	Resistance (Ω)
50 (122)	$226.0\ ^{+33.6}_{-36.6}$
115 (239)	$26.4\ ^{+1.71}_{-2.21}$

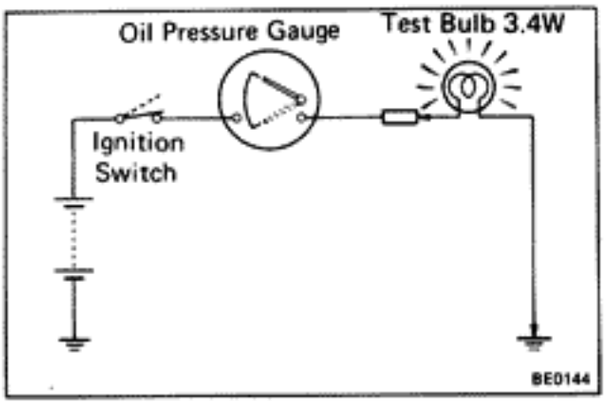

Oil Pressure Gauge

INSPECTION OF OIL PRESSURE GAUGE

1. INSPECT RECEIVER GAUGE OPERATION

(a) Disconnect the connector from the sender gauge. Ground the terminal through a 3.4W bulb as shown.

(b) Turn the ignition switch on. Check that the bulb starts flashing and the gauge pointer deflects.

If indications are not as specified, remove and test the receiver gauge.

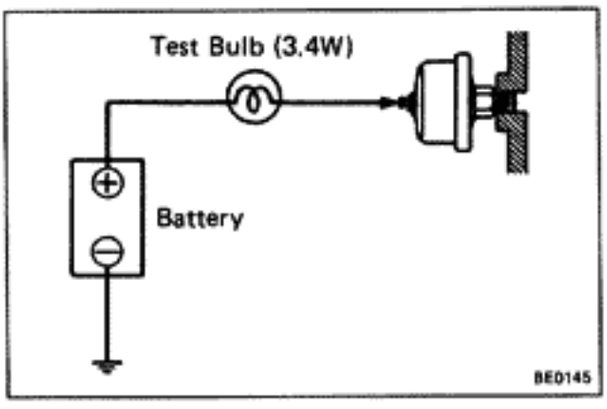

2. INSPECT SENDER GAUGE OPERATION

(a) Disconnect the connector from the sender gauge.

(b) Connect a 12V battery to the sender gauge terminal in series with a 3.4W bulb. Check that the bulb does not light when the engine is stopped, and flashes when the engine is running. The number of flashes should vary with engine speed.

If operation is not as specified, replace the sender gauge.

Brake Warning

INSPECTION OF BRAKE WARNING

1. INSPECT WARNING LIGHT OPERATION

(a) Disconnect the connector from the brake fluid level warning switch. Connect the switch terminal 1 and body ground.

(b) Turn the ignition switch on. Check that the bulb lights.

If operation is not correct, remove and test the bulb.

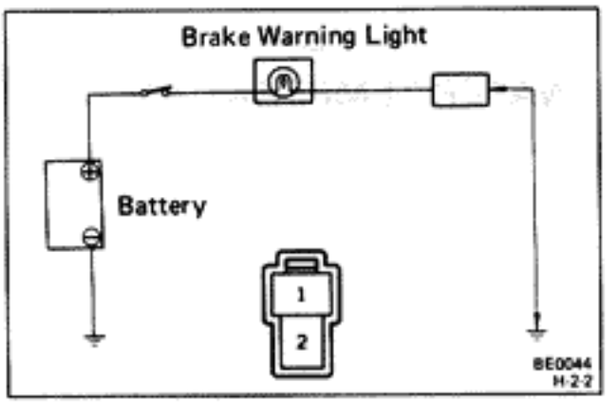

2. INSPECT OPERATION OF BRAKE FLUID LEVEL WARNING SWITCH

Inspect the switch operation when the switch is OFF (float up) and when the switch is ON (float down).

If operation is not as specified, replace the switch.

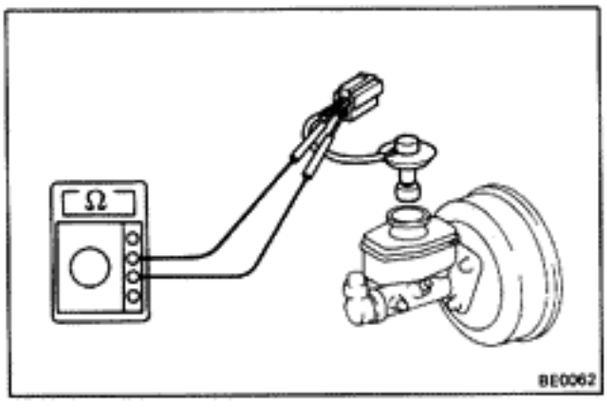

3. INSPECT OPERATION OF PARKING BRAKE SWITCH

Using an ohmmeter, inspect the continuity between the terminals 1 and 2.

(a) Check that there is continuity when the switch is free (parking brake lever up).

(b) Check that there is no continuity when the switch pin is pushed (parking brake lever down).

If operation is not as specified, replace the switch.

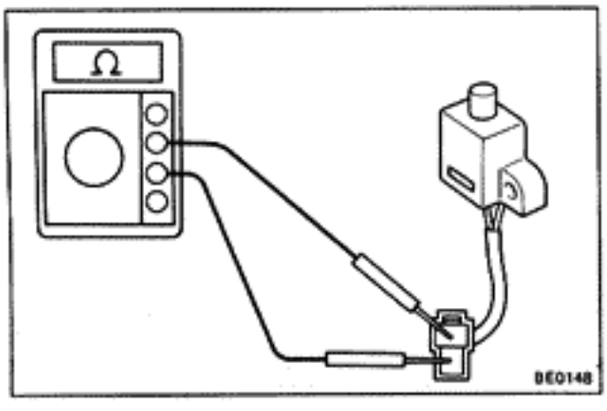

Combination Meter and Gauge (Digital Type)

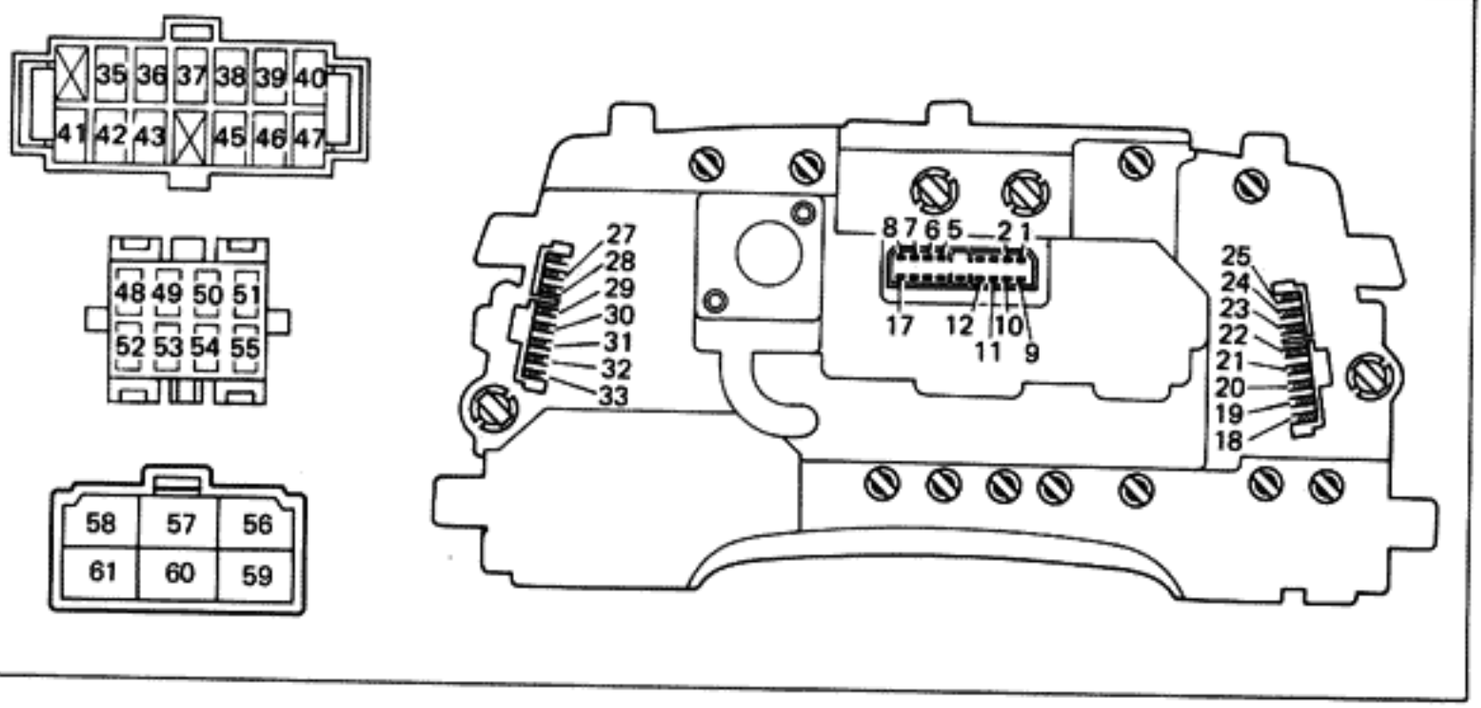

COMBINATION METER CIRCUIT

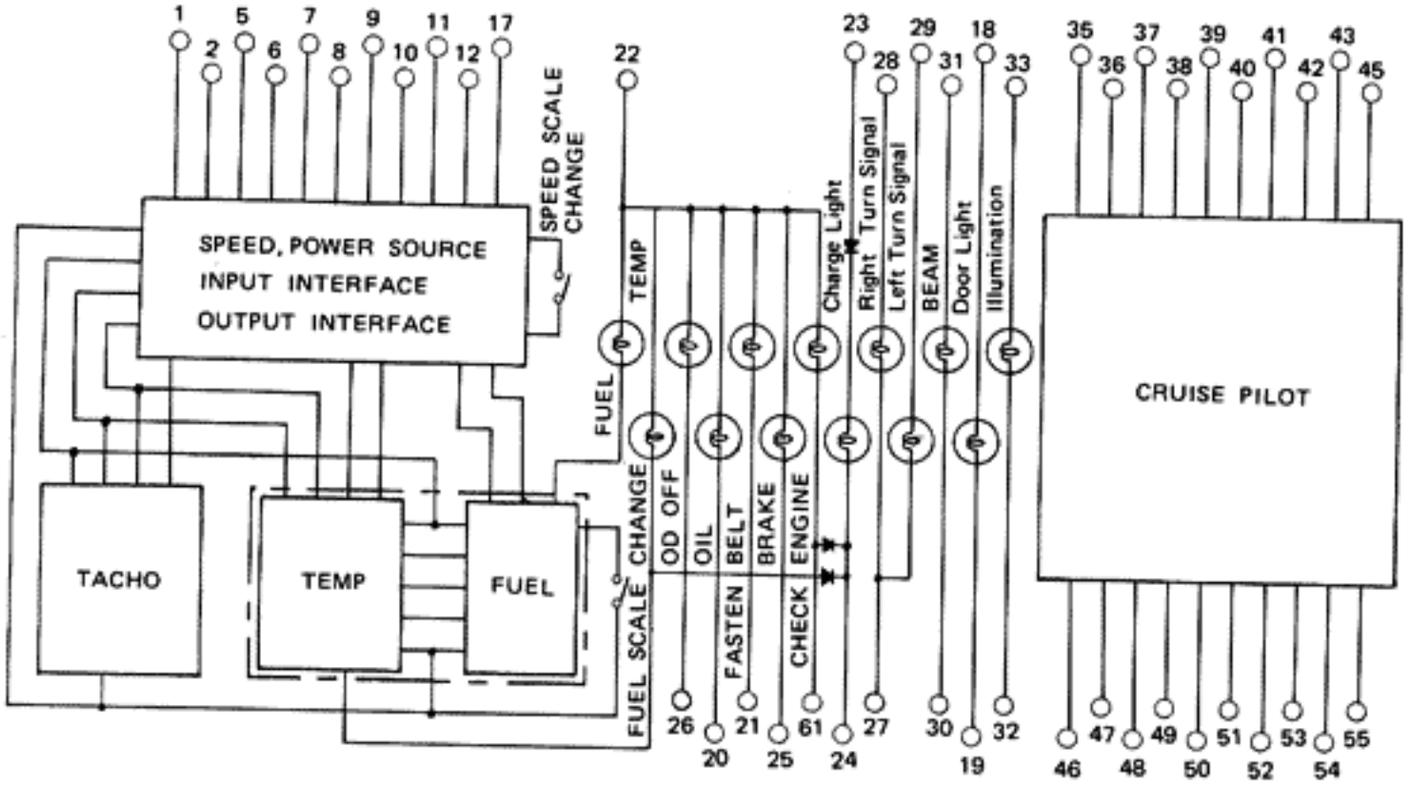

No.	Wiring connector sides	No.	Wiring connector sides
1	Ignition Switch (+)	33	Light Control Relay (Tail)
2	Body Ground of Power Source	35	Trip Computer Terminal GND
5	Remaining Fuel Quantity Signal	36	Trip Computer Terminal F
6	Starting Signal	37	Trip Computer Terminal RST
7	TEMP Signal	38	Trip Computer Terminal TAU
8	Dim Signal	39	Trip Computer Terminal ACC
9	RPM Signal	40	Trip Computer Terminal IG
10	Signal Ground	41	Trip Computer Terminal DIM
11	Power Source of Fuel Sender Gauge	42	Trip Computer Terminal 12V
12	4-pulse Signal	43	Trip Computer Terminal 5V
17	Dim Restriction Signal	45	Trip Computer Terminal DIM (12V)
18	Door (+)	46	Trip Computer Terminal VF (12V)
19	Door (–)	47	Trip Computer Terminal CK
20	Oil Pressure Sender Gauge	48	Trip Computer Terminal SET
21	Fasten Belts Relay	49	Trip Computer Terminal FUL
22	Ignition Switch (+)	50	Trip Computer Terminal CLK
23	Battery Terminal (+)	51	Trip Computer Terminal KML
24	Changing Regulator Terminal L	52	Trip Computer Terminal ARR
25	Parking Brake Switch	53	Trip Computer Terminal JST
26	OD Switch	54	Trip Computer Terminal DIM (12V)
27	Ground	55	Trip Computer Terminal GND
28	Turn Signal Switch Terminal TR	57	Pattern Select Switch 4
29	Turn Signal Switch Terminal TL	58	Pattern Select Switch 3
30	Ground	59	Ground
31	Dimmer Switch Terminal HU	61	EFI Computer Terminal W
32	Rheostat		

Combination Meter (Digital Type)

PRECAUTIONS

1. When checking voltage, resistance, etc., use a high-impedance type tester (It is impossible with a simple tester).
2. Do not attempt to disassemble or repair individual components.
3. Do not attempt to make checks with an external power (battery etc.) applied directly to the component.
4. When the ignition switch is turned ON, indications other than the speedometer will be slightly delayed but this is normal.
5. When the ignition switch is placed at ST, all meters will go out but this is normal.
6. Do not touch circuit components as there is danger of circuit damage due to static electricity. Never reverse battery connections as it could result in instant damage to the interior of the components.
7. Do not disconnect the battery while the engine is running as this would cause an instant reverse charge (100V), resulting in damage to the interior of the components.
8. Always disconnect the battery terminals before pulling apart connectors or terminals.
9. To prevent damage, handle meters with care.

Troubleshooting

WIRING DIAGRAM

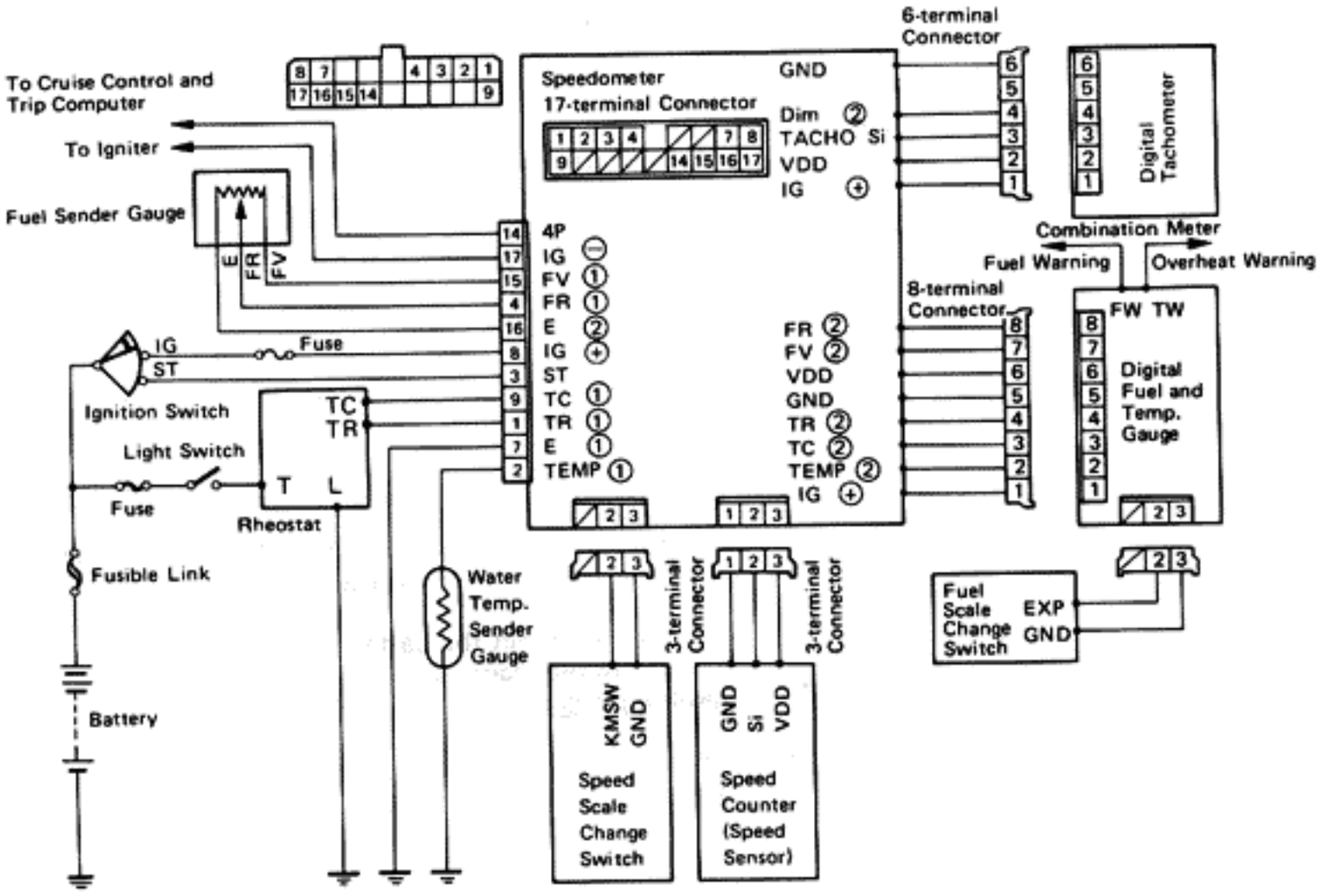

Dim	:	Dim signal
E ①	:	Body ground of power source
E ②	:	Signal ground
EXP	:	Magnifier signal
4P	:	4-pulse signal
FR	:	Remaining fuel quantity signal
FV	:	Power source of fuel sender gauge
GND	:	Circuit ground
IG ⊕	:	Power source
IG ⊖	:	RPM signal
KMSW	:	Conversion signal
Si	:	Speed sensor signal (20-pulse)
ST	:	Starting signal
TACHO Si	:	Wave form rectification signal of IG ⊖
TEMP	:	TEMP signal
TC	:	Dim restriction signal
TR	:	Dim signal
VDD	:	Power source of receiver gauge

Trouble			Refer to
Speedometer	No display at all		A
	Speedometer displays [0] while driving.		B
	Flickers or fluctuates		Check cable
	Abnormal display	Difficult to comprehend	Replace speedometer
	Lights do not dim when light and rheostat S/W turned ON.		C
	Display disappears when rheostat is turned with light S/W ON.		D
	Brightness does not change even when rheostat is turned.		E
	Abnormal speedometer signal		F
	No speed unit conversion		G
Tachometer	No display at all		H
	Zero indication even with engine running.		I
	Abnormal display	Wrong display, no display change or constant display change from correct to "0" or no display at all.	Replace tachometer
	Lights do not dim when light and rheostat S/W turned ON.		J
Fuel Gauge	No display at all		K
	Fuel scale change display (magnifier) does not illuminate.		L
	Fuel warning light does not light.		M
	Fuel warning light always lit.		N
	Abnormal display	No display segment or intermediate segment illumination. No figure or symbol indication.	Replace fuel and temp. gauges
	Defective display		O
	Lights do not dim when light and rheostat S/W turned ON.		P
Water Temp. Gauge	No display at all		K
	Top segment does not flash.		M
	Abnormal display	Both indicator segments lit. No figure or symbol indication, etc.	Replace fuel and temp. gauges
	Wrong display	Display segment does not rise. Top segment flashes always. Unstable display, etc.	Q
	Lights do not dim when light and rheostat S/W turned ON.		P

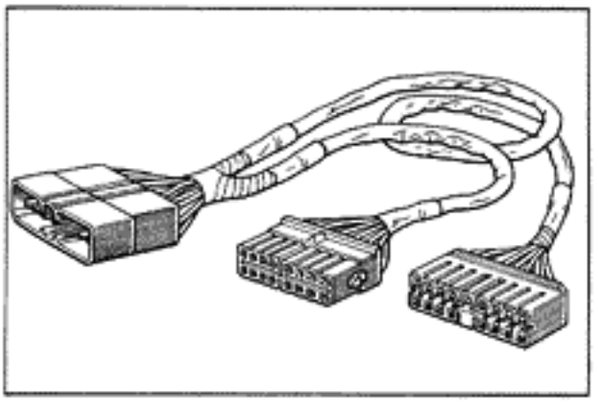

NOTE: The "sub-harness (SST)" appearing in the following pages of the Troubleshooting Section refer to SST 09082-00100, Digital Meter Check Sub-Harness.

SECTION	TROUBLE	
A	Speedometer	No display at all

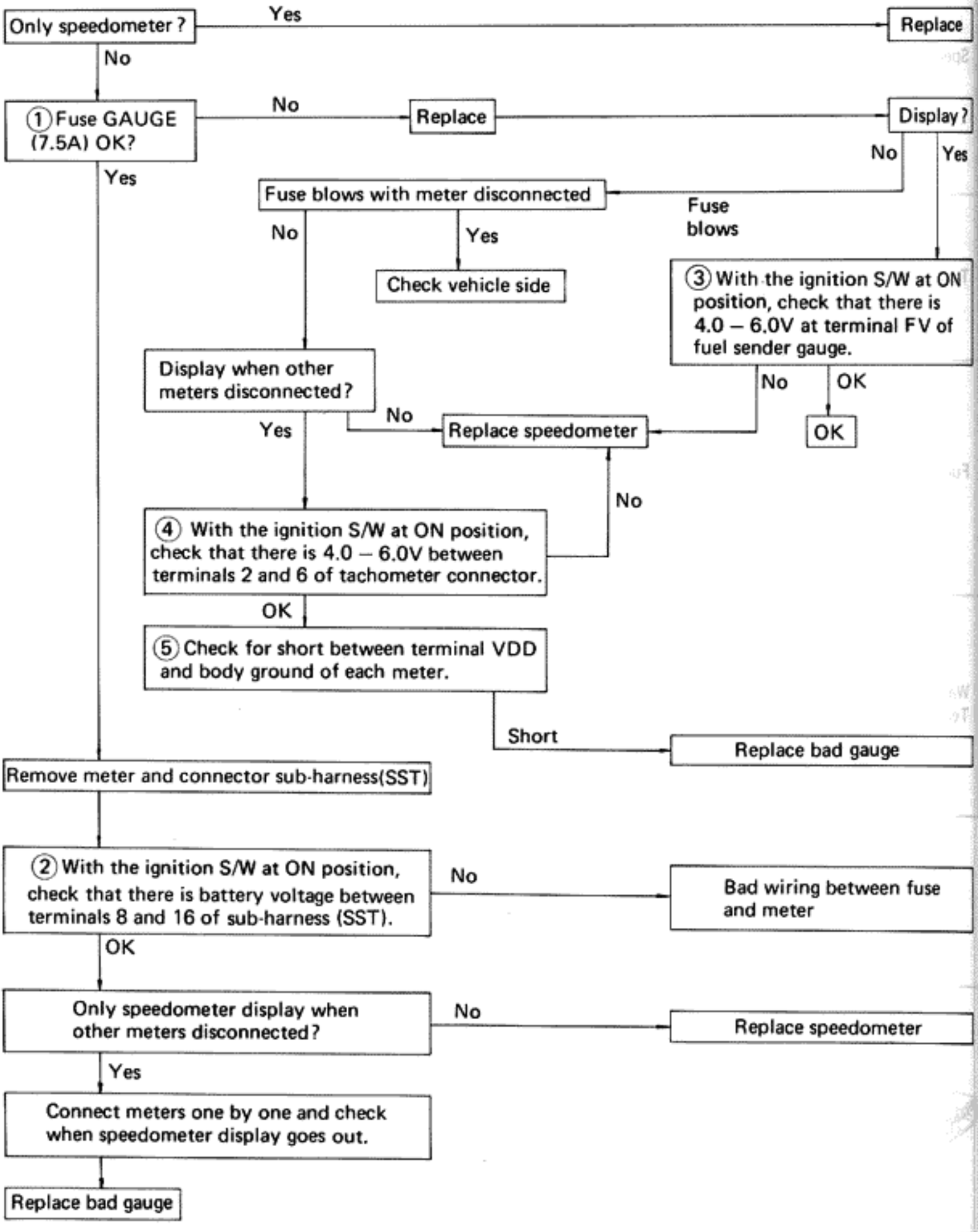

1

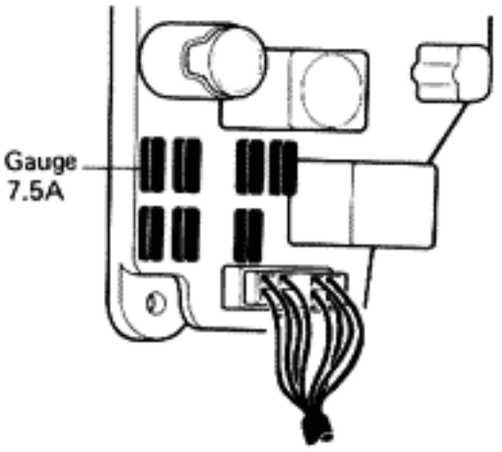

In LH cowl side

2

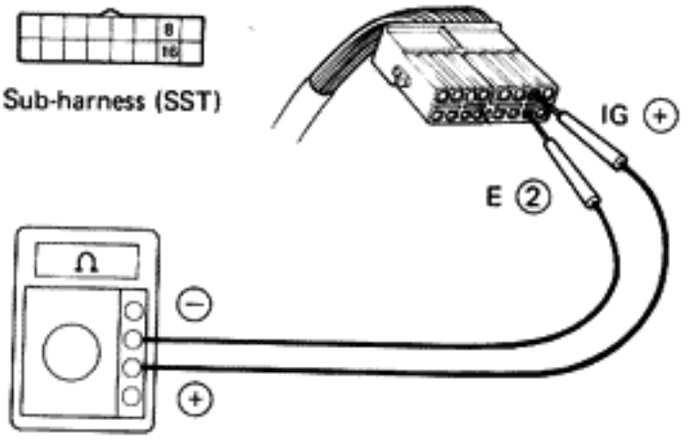

BE0419

3

Wiring Connector of Fuel Sender Gauge

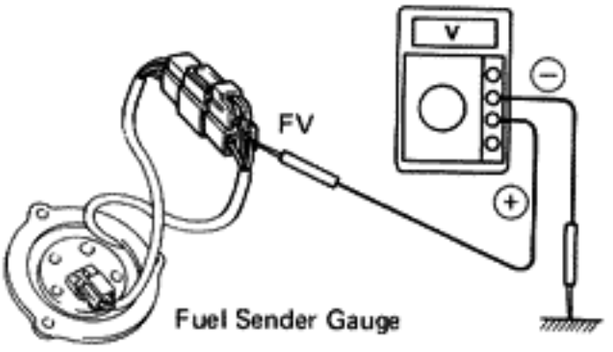

CAUTION: Never short circuit terminal FV.

BE0056

4

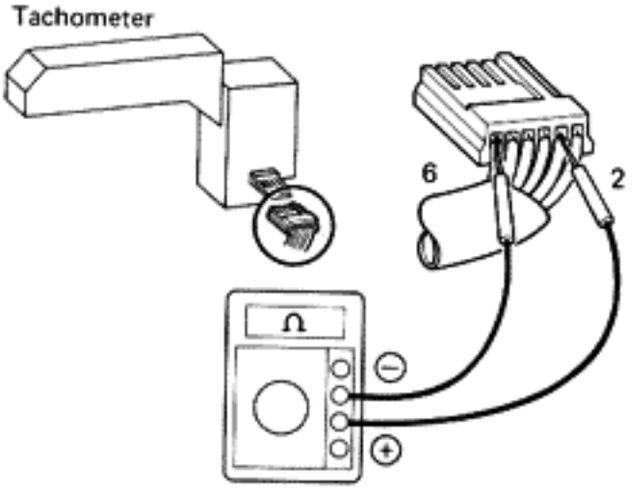

5

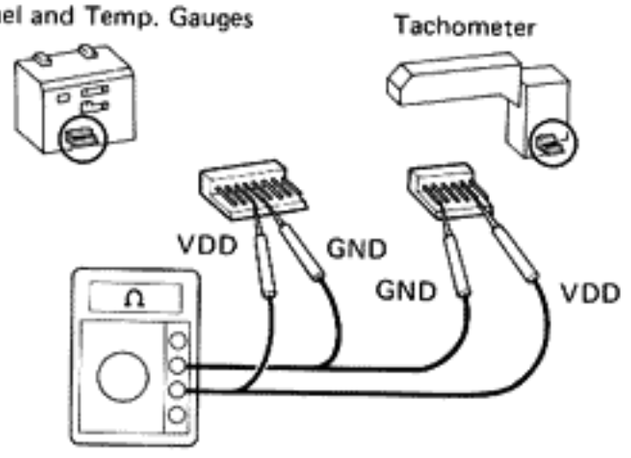

SECTION	TROUBLE	
B	Speedometer	Speedometer displays [0] while driving

Does trip meter operate?

No → Does trip meter operate with meter disconnected and cable turned?

- Yes → • Check cable • Check drive and driven gears
- No → Check total counter

Yes → Remove meter and connect sub-harness (SST)

① With the ignition S/W at ON position, check that there is 4.0 – 6.0V between terminals 1 and 3 of connector for speed sensor (total counter).

No → ④ With the ignition S/W at ON position, check that there is 4.0 – 6.0V between terminals 1 and 3 of speedometer with connector removed.

- No → Replace speedometer
- OK → Replace speed sensor

OK → ② With the ignition S/W at ON position, does voltage between terminals 1 and 2 of speed sensor connector fluctuate between 0 – 5.0V when meter cable is turned?



Yes → Replace speedometer

No → ③ With the ignition S/W at ON position, and speed sensor disconnected, does display appear when terminals 1 and 2 of speedometer are connected and disconnected?

No → Replace speedometer

Yes → Replace speed sensor

1

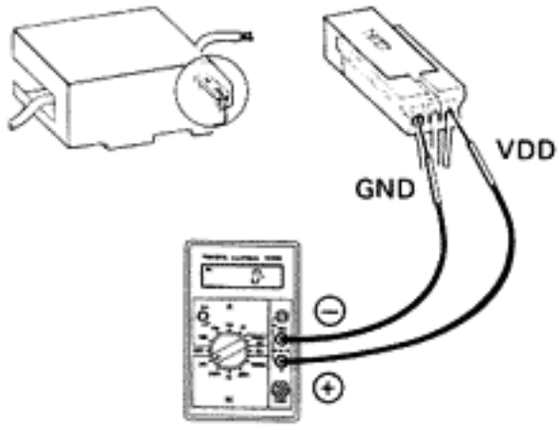
Speedometer
VDD
GND

2

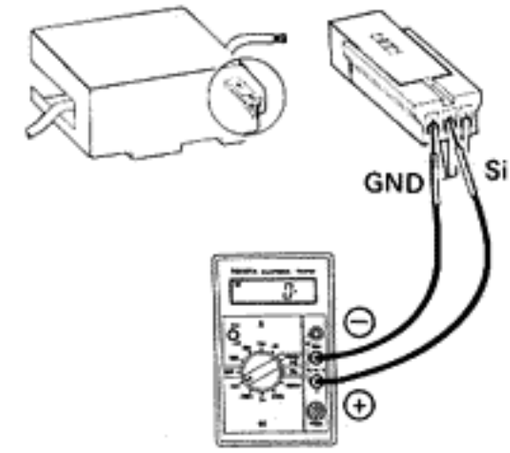
Speedometer
GND
Si

3

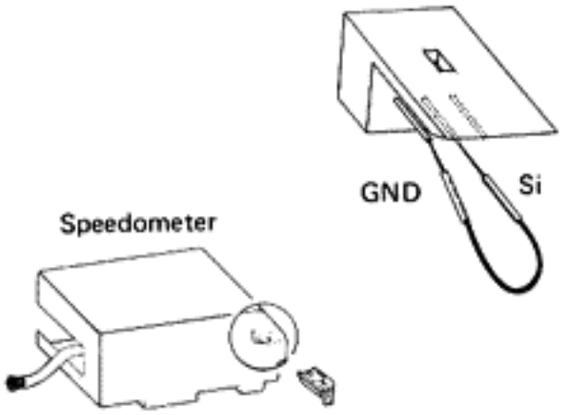
GND
Si
Speedometer

4

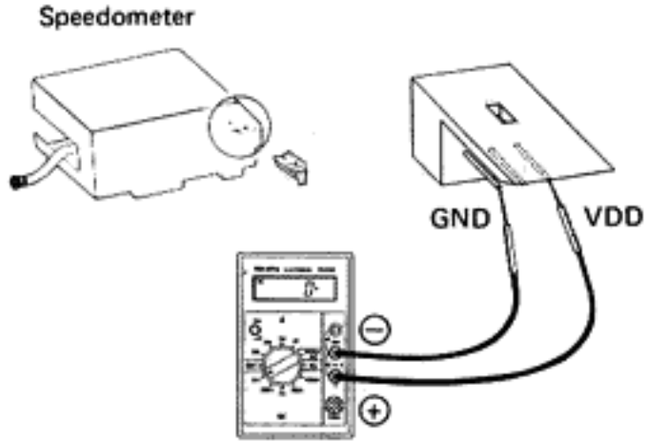
Speedometer
GND
VDD

SECTION	TROUBLE	
C	Speedometer	Lights do not dim when light and rheostat S/W turned ON.

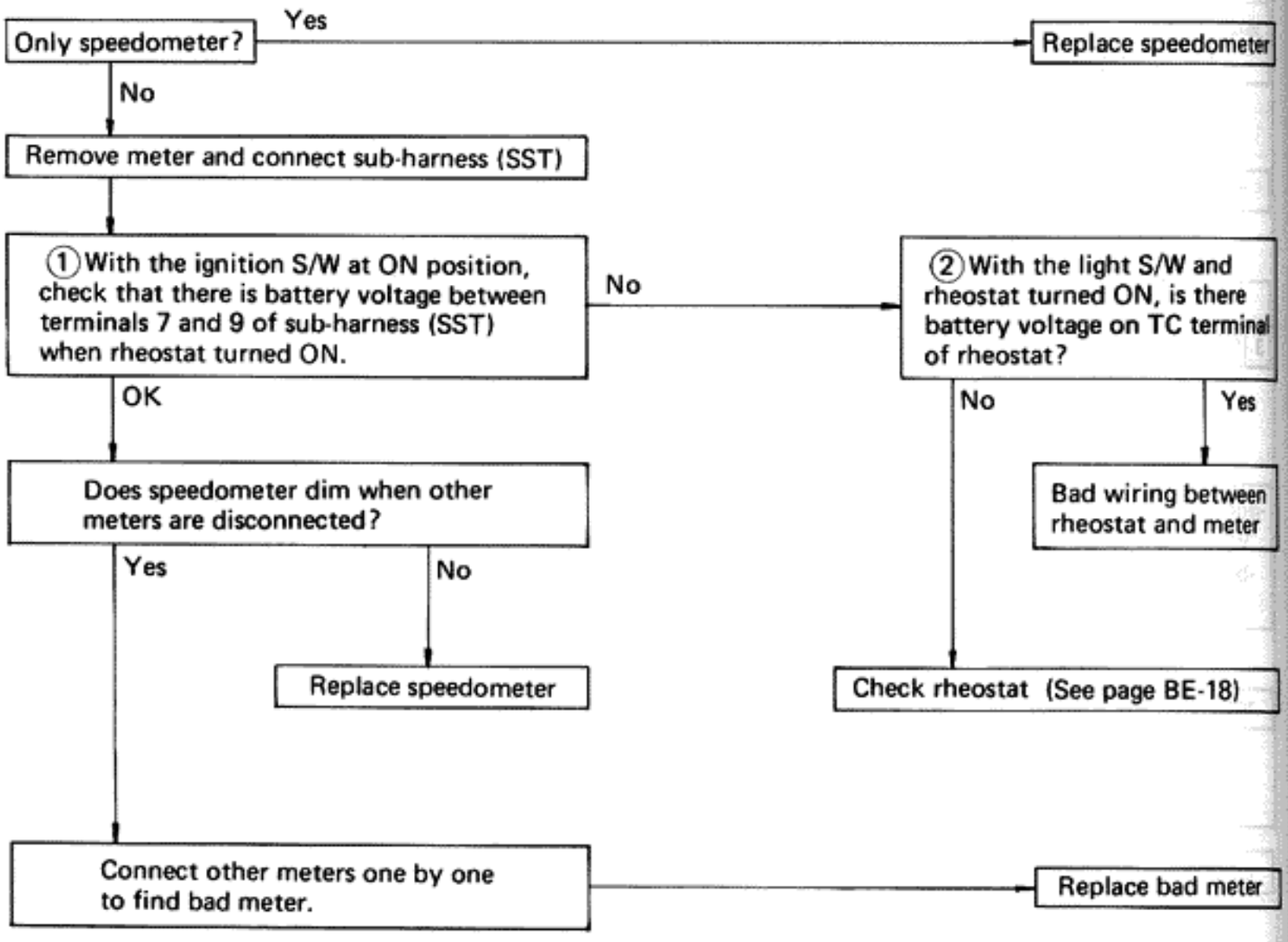

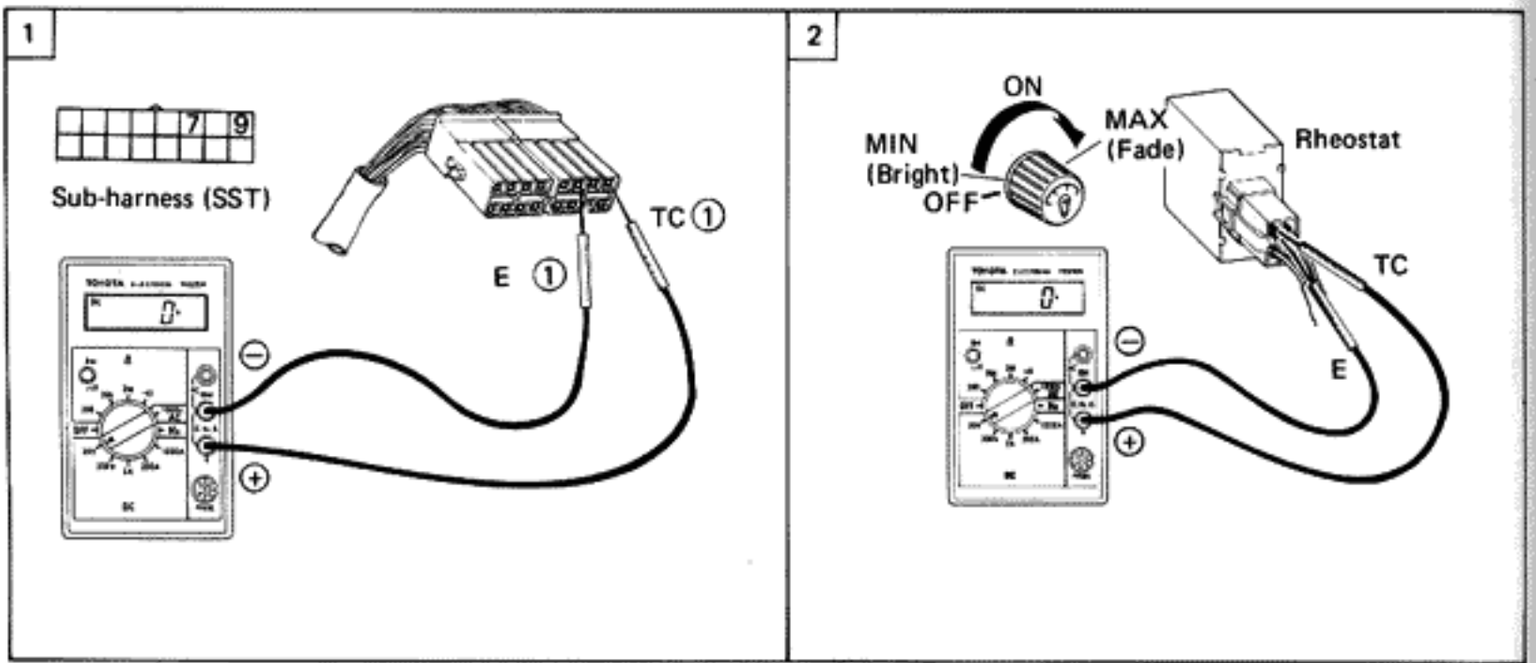

SECTION	TROUBLE	
D	Speedometer	Display disappears when rheostat is turned with light S/W ON

Only speedometer? — Yes → Replace speedometer

No →

Remove meter and connect sub-harness (SST)

① With the ignition S/W at ON position, does voltage between terminals 1 and 16 of sub-harness vary from 0 to 9V when rheostat is turned?

- No → ② With the light S/W turned ON, does voltage between terminals TR and E of rheostat vary when rheostat is operated?
  - No → Check rheostat (See page BE-18)
  - Yes → Bad wiring between rheostat and meter
- Yes → Is speedometer normal with other meters disconnected?
  - No → Replace speedometer
  - Yes → Connect other meters one by one to find faulty one. → Replace bad meter

1

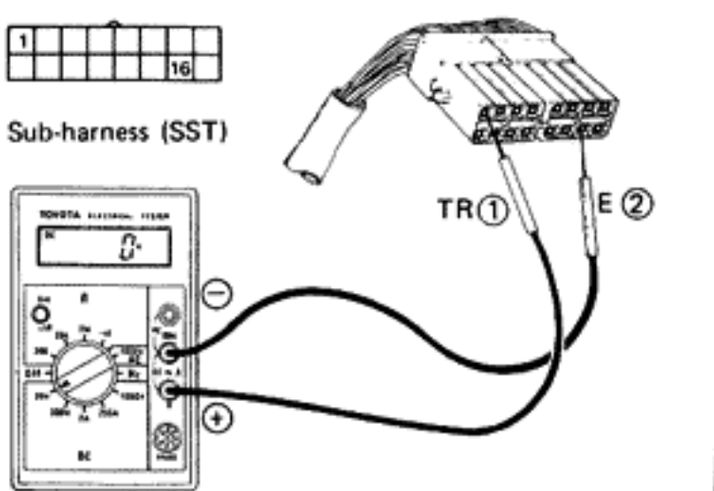

2

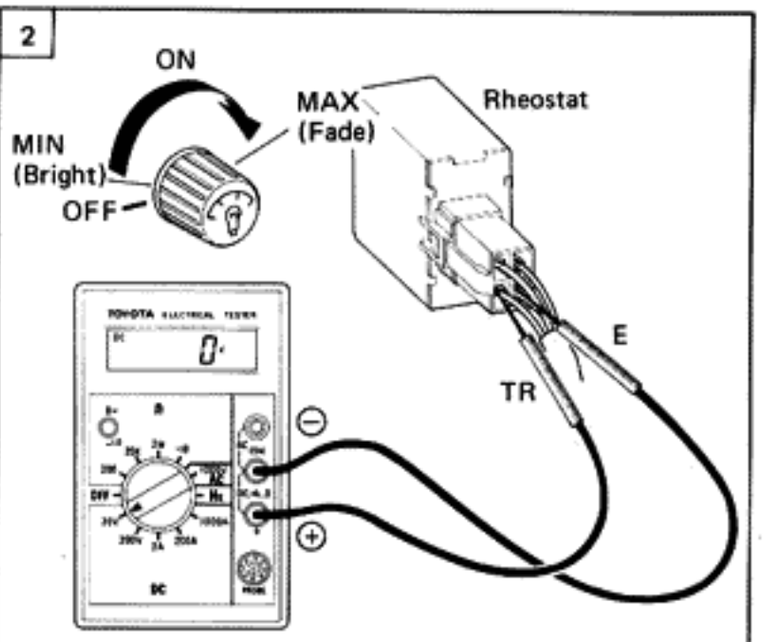

SECTION	TROUBLE	
E	Speedometer	Brightness does not change when rheostat is turned

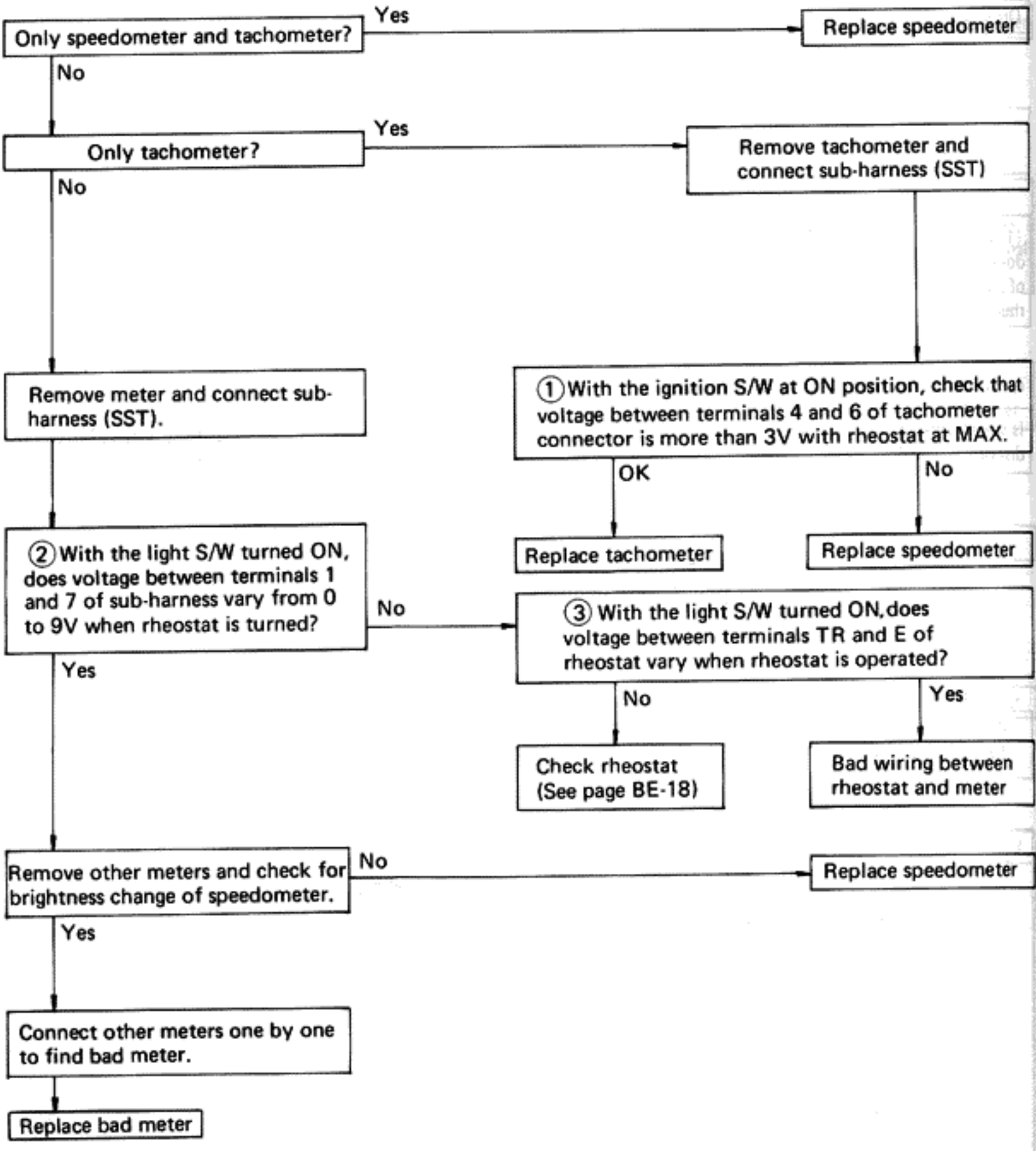

1

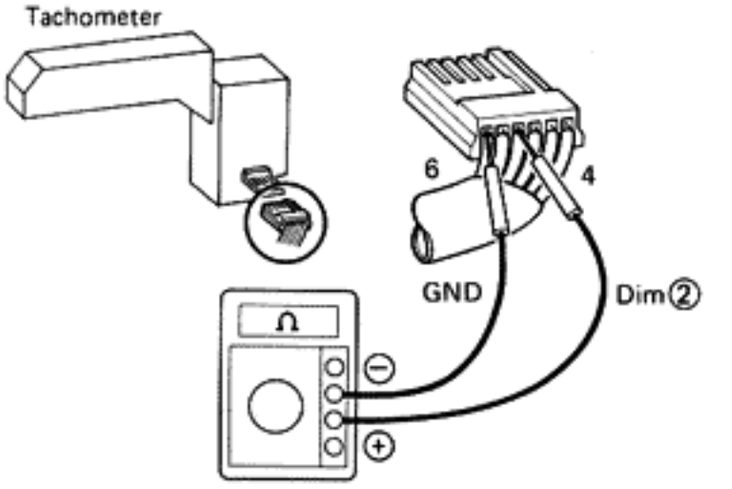
Tachometer
6
4
GND
Dim ②

2

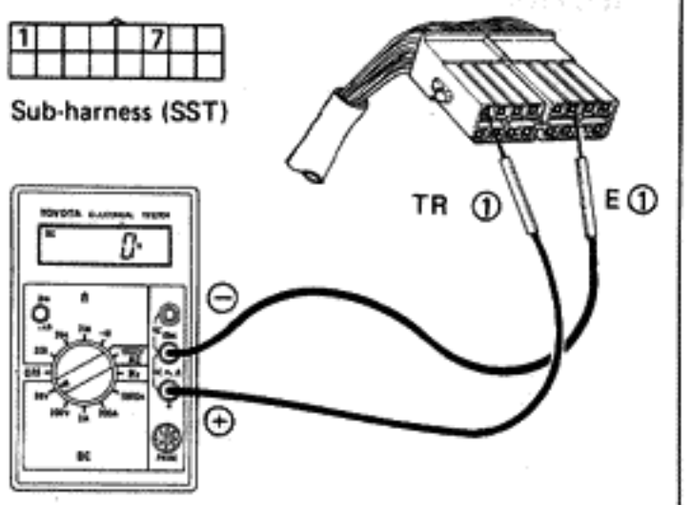
1
7
Sub-harness (SST)
TR ①
E ①

3

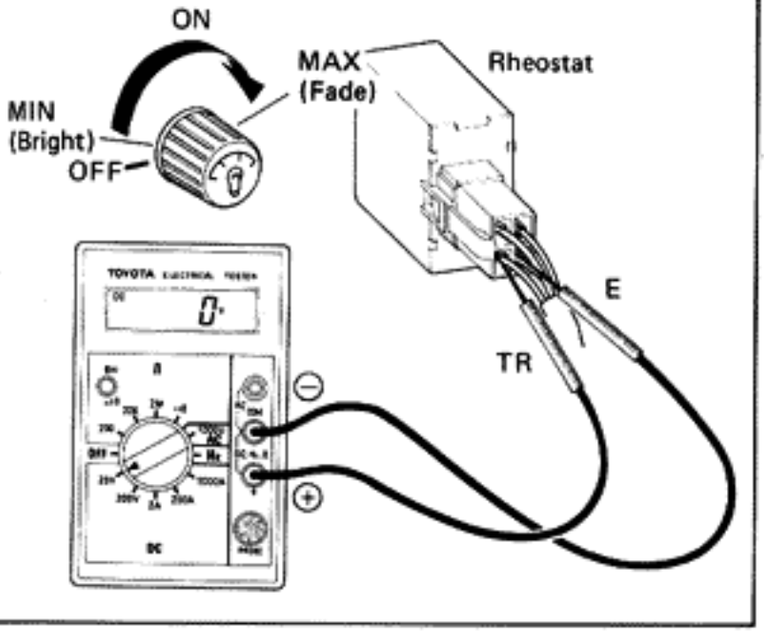
ON
MAX
(Fade)
Rheostat
MIN
(Bright)
OFF
E
TR

SECTION	TROUBLE	
F	Speedometer	Abnormal speedometer signal

IG S/W ON, CRUISE CONTROL MAIN S/W ON

① With the ignition S/W at ON position, is there battery voltage on terminal 14 of connector with wiring meter connector disconnected?

No → Defective control parts for CRUISE CONTROL

Yes

Connect sub-harness (SST)

② With the ignition S/W at ON position, does voltage between terminals 14 and 16 of sub-harness (SST) change from 10 to 0V when the magnet shaft is turned?



No → Replace speedometer

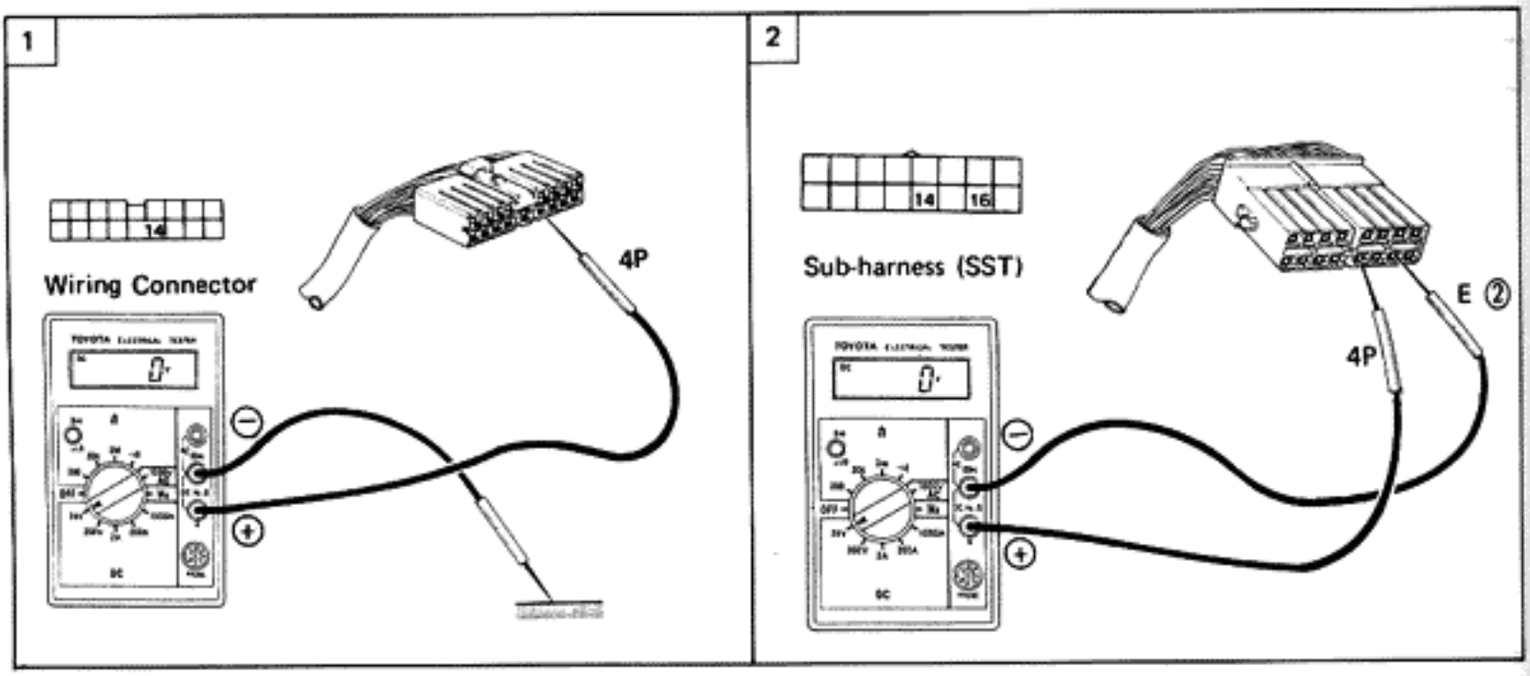

SECTION	TROUBLE	
G	Speedometer	No speed unit conversion

Remove meter and connect sub-harness (SST)

↓

① With the ignition S/W at ON position, is there speed unit conversion when rear terminals are short-circuited?

No → Replace speedometer

Yes → Replace speed scale change S/W

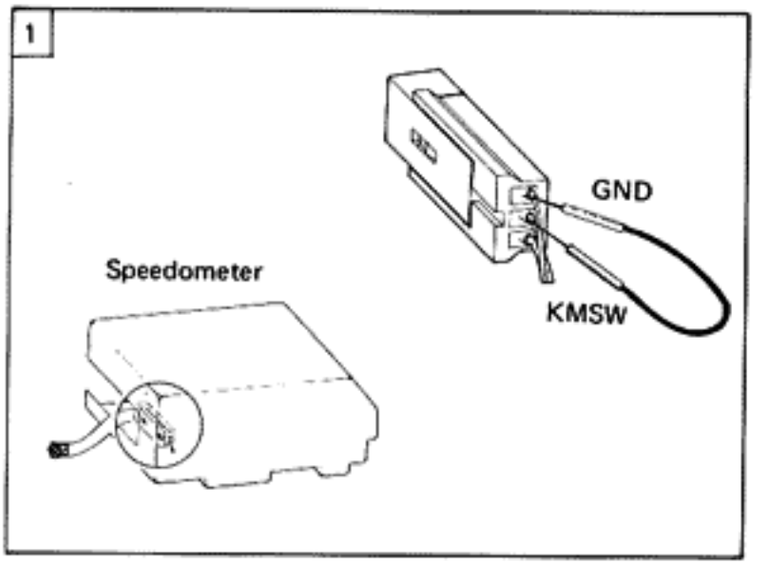

SECTION	TROUBLE	
H	Tachometer	No display at all

Only tachometer? — No → Refer to section A

Yes

Remove meter and connect sub-harness (SST)

① With the ignition S/W at ON position, check that voltage between terminals of tachometer connector is as follows:
- Terminals 1 – 6 Battery voltage
- Terminals 2 – 6 4.0 – 6.0V
- Terminals 4 – 6 0 – 1.5V

No → Replace speedometer

OK

Replace tachometer

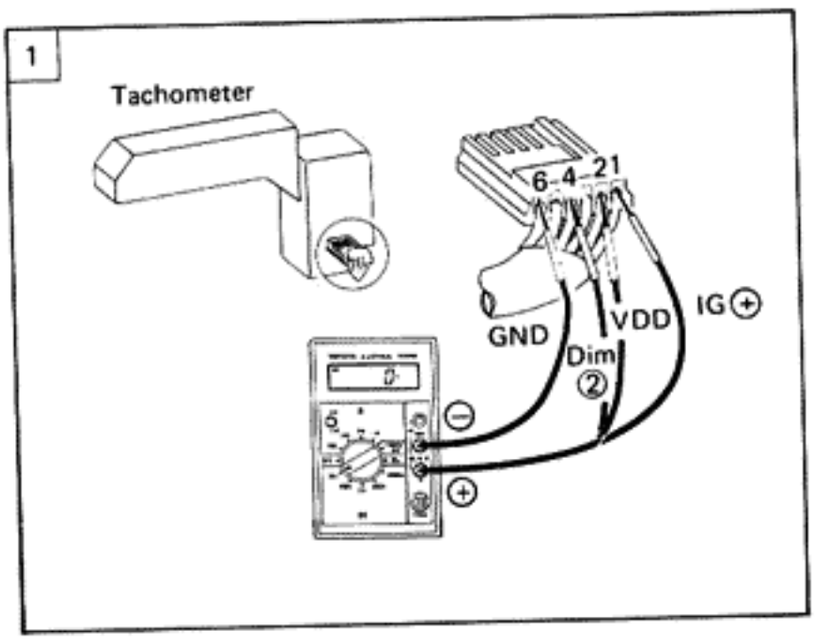

SECTION	TROUBLE	
I	Tachometer	Zero indication even with engine running

Remove meter and connect sub-harness (SST)

↓

① With the ignition S/W at ON position, does voltage between terminals 16 and 17 of sub-harness fluctuate with variations in engine rpm?

No → Bad wiring between igniter and meter

Yes ↓

② With the ignition S/W at ON position, does voltage between terminals 3 and 6 of tachometer connector fluctuate between 0 and 1.5V when engine speed increases from 2,000 to 3,000 rpm?

No → Replace speedometer

Yes ↓

Replace tachometer

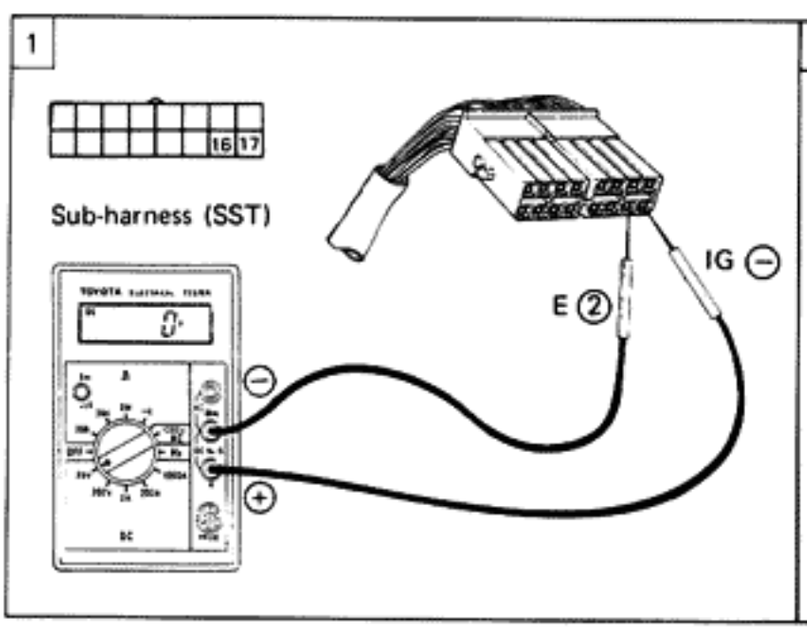

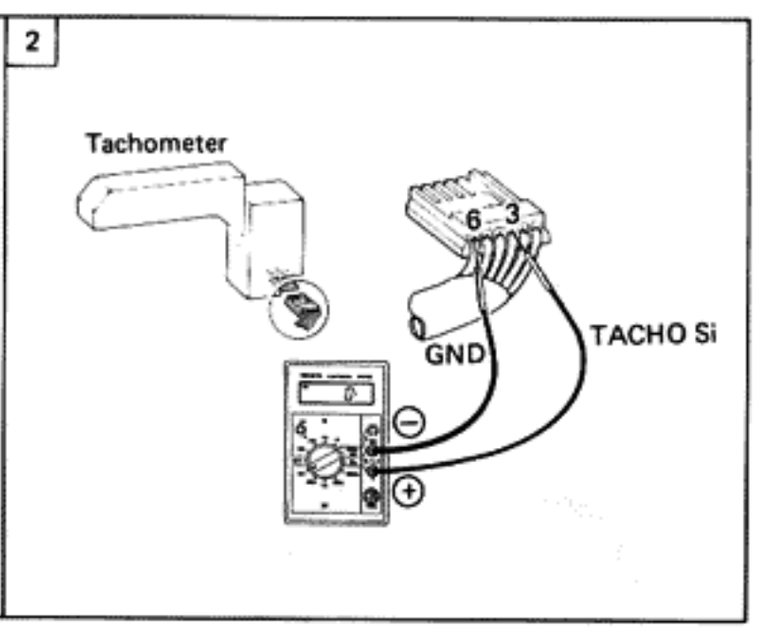

SECTION	TROUBLE	
J	Tachometer	Lights do not dim when light and rheostat S/W turned ON.

Only tachometer? — No → Refer to section C

Yes

Remove meter and connect sub-harness (SST)

① With the ignition S/W at ON position, light S/W turned ON and rheostat turned to MAX, is there 3 to 5V between terminals 4 and 6 of tachometer connector? — No → Replace speedometer

Yes

Replace tachometer

NOTE:
Connector dimming is performed by the dim signal (Dim②) of the speedometer.

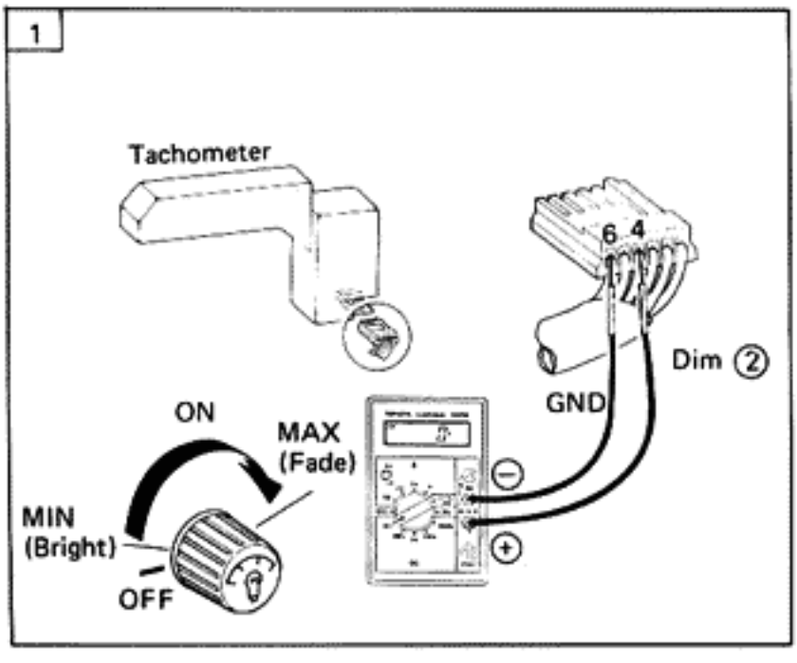

SECTION	TROUBLE	
K	Fuel gauge Temp. gauge	No display at all

For Fuel Gauge

For Temp. Gauge

Only fuel gauge? (Temp. gauge OK?) — Yes → Replace fuel and temp. gauges ← Yes — Only temp. gauge? (Fuel gauge OK?)

No

No

Only fuel and temp. gauges? (Speedometer and Tachometer OK?)

Yes

No

Remove meter and connect sub-harness (SST)

Refer to section A

With the ignition S/W at ON position, check the voltage between terminals of fuel and temp. gauges connector is as follows:

①	6 – 5		4.0 – 6.0V
	3 – 5	Light S/W turned OFF	0 – 2.0V
		Light S/W turned ON	4.0 – 6.0V
②	4 – 5	Light S/W turned ON	
		Rheostat turned OFF	3.0 – 6.0V
		Rheostat operate (MIN — MAX)	0 – 3.8V

No → Replace speedometer

OK → Replace fuel and temp. gauges

1

Fuel and Temp. Gauges

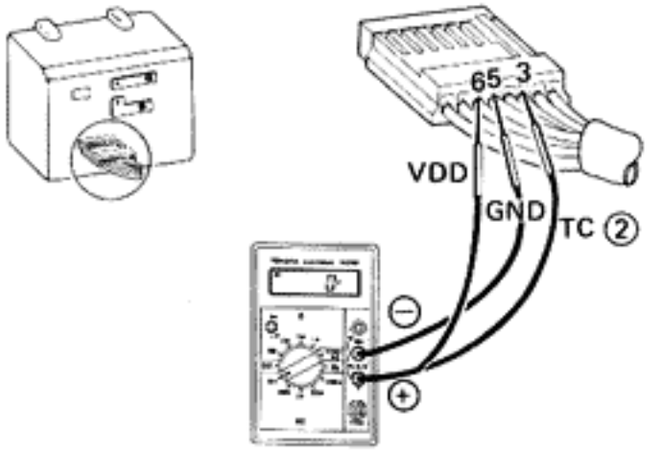

2

Fuel and Temp. Gauges

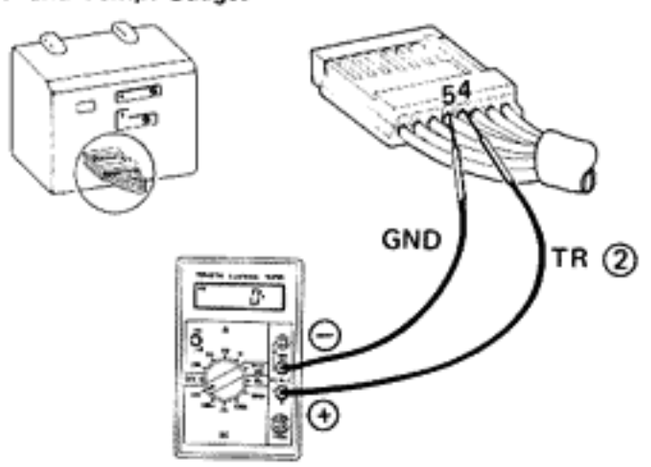

SECTION	TROUBLE	
L	Fuel gauge	Fuel scale change display (magnifier) does not illuminate

Remove meter and connect sub-harness (SST)

↓

① With the ignition S/W at ON position, does magnifier illuminate when rear terminals are short-circuited? — Yes → Replace FUEL SCALE CHANGE S/W

↓ No

Replace fuel and temp. gauges

1

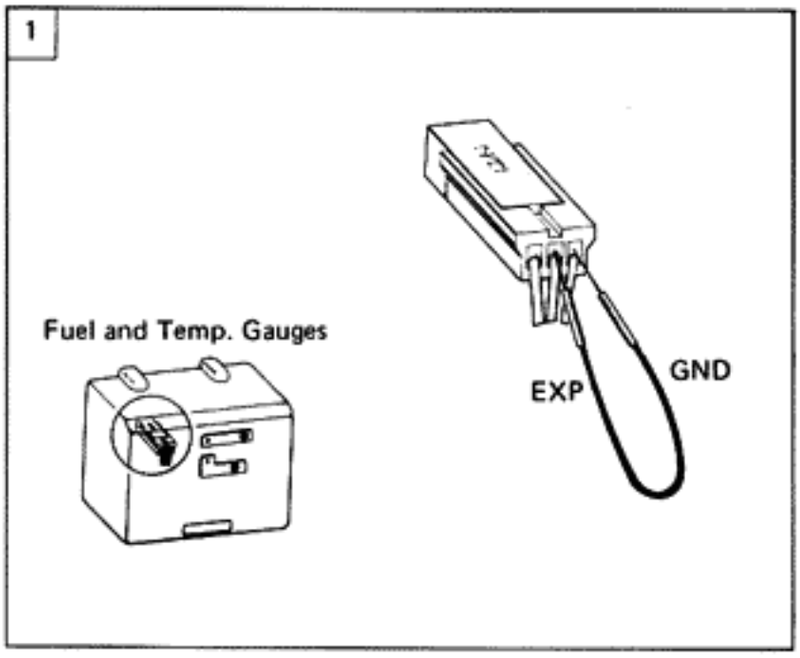

SECTION	TROUBLE	
M	**Fuel gauge**	**Warning light does not light**

Is bulb OK? — No → Replace bulb

Yes

① Is circuit plate open-circuited? — Yes → Replace circuit plate

No

Is terminal set nut loose? — Yes → Retighten

No

Replace fuel and temp. gauges

SECTION	TROUBLE	
N	**Fuel gauge**	**Warning light always lit**

① Is circuit plate short-circuited? — Yes → Replace circuit plate

No

Replace fuel and temp. gauges

M-① N-①

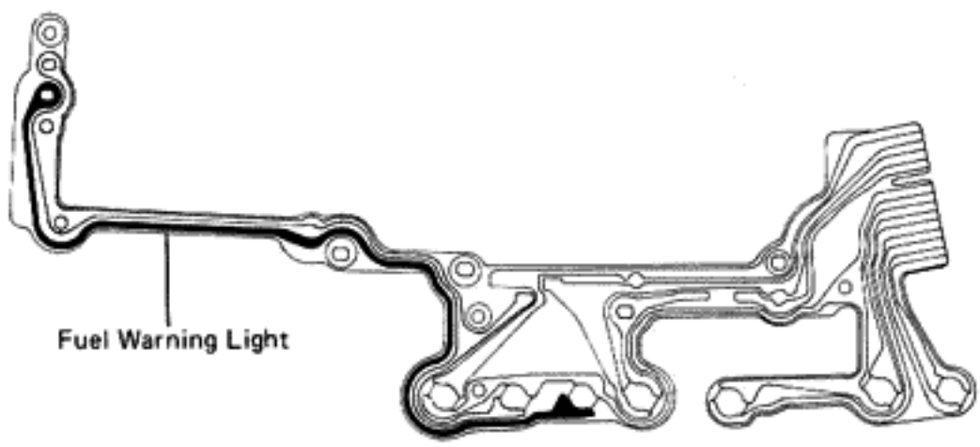

SECTION	TROUBLE	
O	Fuel gauge	Defective display

Is fuel sender gauge OK? (See page BE-59)
- No → Replace fuel sender gauge
- Yes ↓

Remove meter and connect sub-harness (SST)

↓

① With the ignition S/W at ON position and fuel and temp. gauges removed, is there voltage between terminals 5 and 8 of speedometer?
- Yes → Replace speedometer
- No ↓

Replace fuel and temp. gauges

1

Fuel and Temp. Gauges

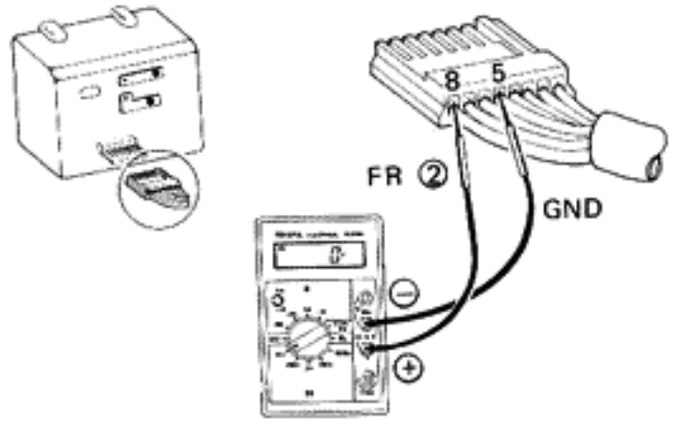

SECTION	TROUBLE	
P	Fuel gauge Water temp. gauge	Lights do not dim when light and rheostat S/W turned ON.

For Fuel Gauge

For Temp. Gauge

Only fuel gauge? (Does temp. gauge dim?) — Yes → Replace fuel and temp. gauges ← Yes — Only temp. gauge? (Does temp. gauge dim?)

No ↓ (from left)

No ↓ (from right)

Only fuel and temp. gauges do not dim? (Speedometer OK?)

Yes ↓

No → Refer to Section C

Remove meter and connect sub-harness (SST)

① With the ignition S/W at ON position and connector of fuel and temp. gauges disconnected, check that there is voltage between terminals of the connector as follows:

3 – 5	Light S/W ON	4.0 – 6.0V
	Light S/W OFF	0 – 1.0V
4 – 5	Light S/W turned ON	
	Rheostat turned OFF	3.0 – 6.0V
	Rheostat operate (MIN — MAX)	0 – 3.8V

No → Replace speedometer

OK → Replace fuel and temp. gauges

1

Fuel and Temp. Gauges

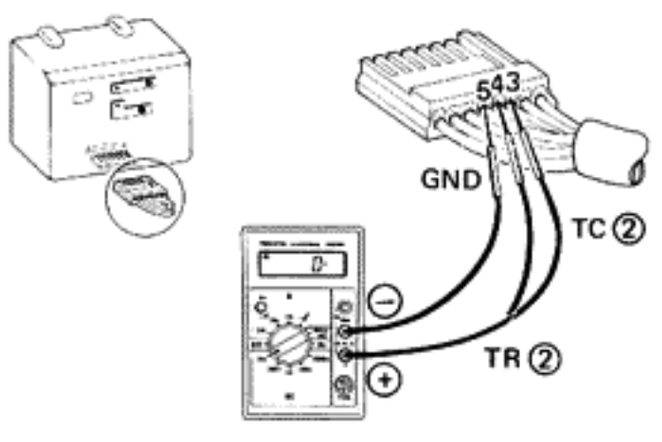

SECTION	TROUBLE	
Q	Water temp. gauge	Defective indication

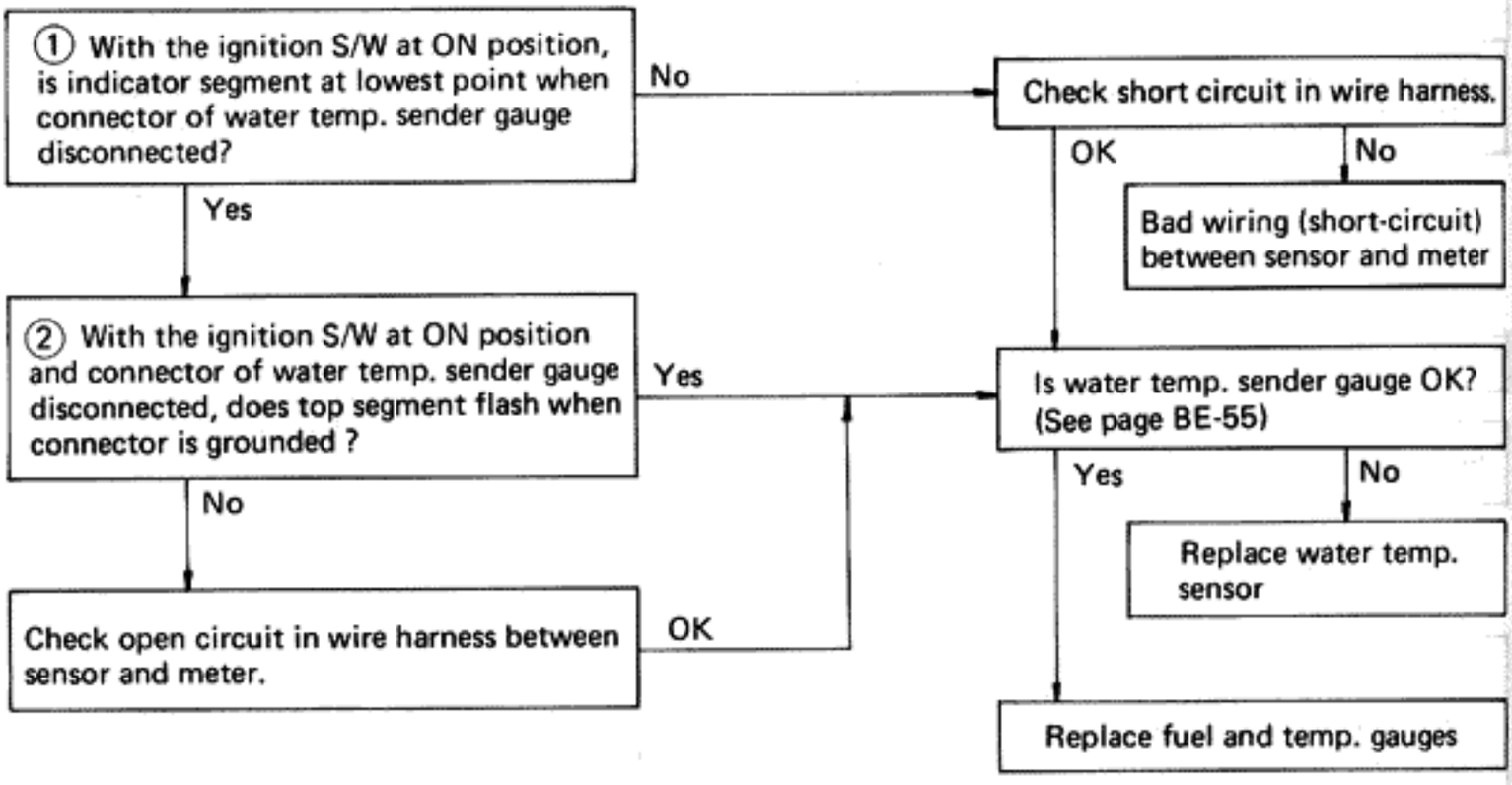

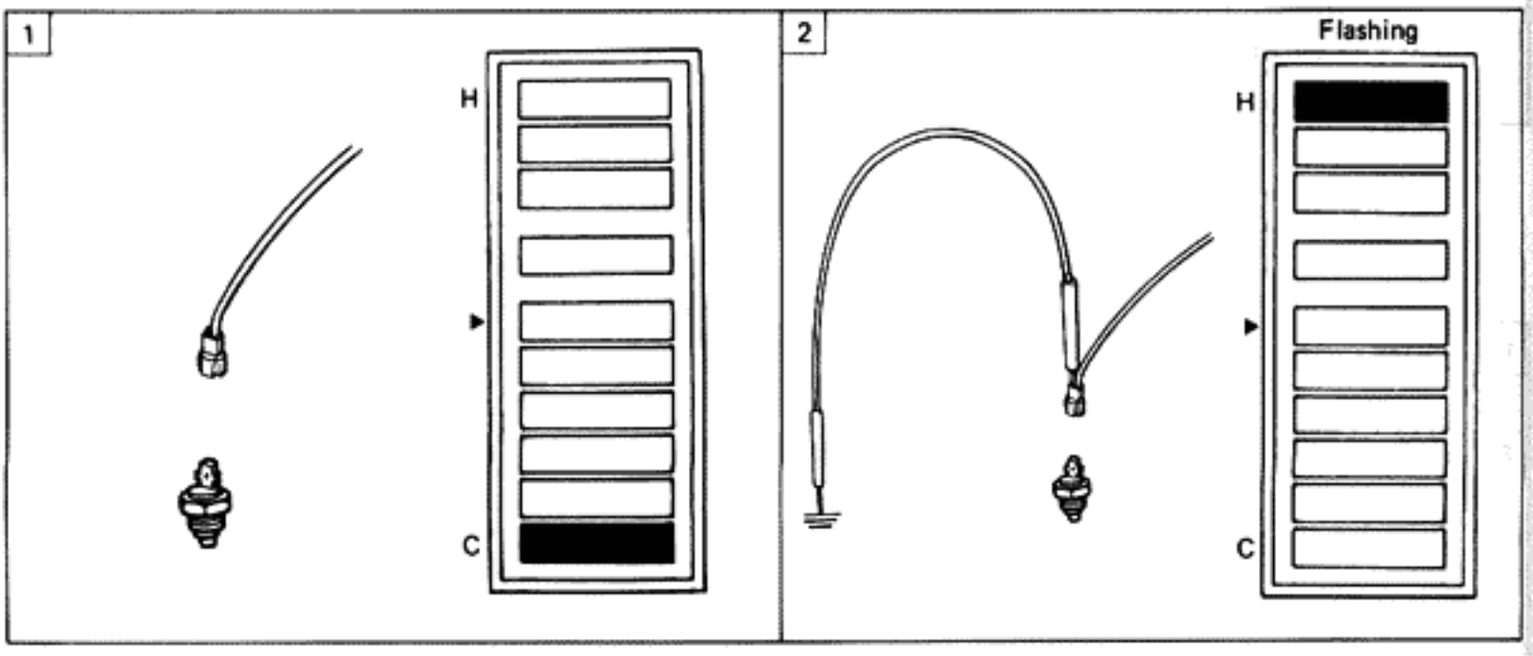

ON-VEHICLE INSPECTION OF COMBINATION METER (Digital Type)

1. REMOVE COMBINATION METER AND CONNECT SUB-HARNESS (SST)

   SST 09082-00100

2. INSPECT CIRCUIT AND PARTS OPERATION

Terminals of sub-harness	Specification
E① – Body ground E② – Body ground	Continuity Zero Ω
IG⊕ – E①	Battery voltage (Ignition switch ON)
ST – E①	8 – 11V (Cranking)
TC – E①	Battery voltage (Light switch and rheostat turned ON.) 0 V (Light switch turned ON and rheostat turned OFF.)
TR – E①	0 – 1.0V (Light switch turned OFF.) 0 – 1.0V (Light switch turned ON and rheostat MIN) 6 – 9V (Light switch turned ON and rheostat MAX)
4P – E①	 about 10V about 0V 4 times/revolution of magnet shaft (Ignition switch ON)
FV – E②	4.0 – 6.0V (Ignition switch ON)
FR – E②	4.4 – 4.8V (F level) (Ignition switch ON) 3.27V (1/2 level) (Ignition switch ON) 2.3 – 2.7V (1/4 level) (Ignition switch ON) 0.3 – 0.5V (E level) (Ignition switch ON)
IG⊖ – E①	11 – 13V (Idling) 10 – 12V (3,000 rpm)
TEMP – E②	1.7V (No. 6 segment is lighted) (Ignition switch ON)

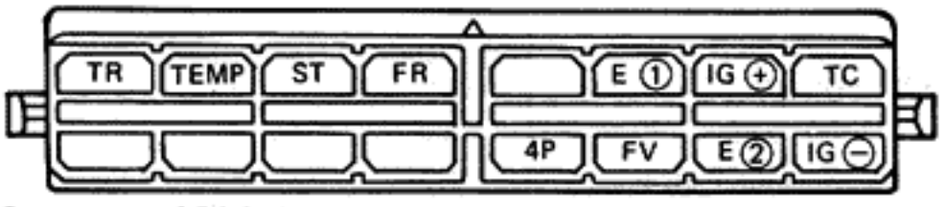

Connector of Digital Meter Check Sub-harness (SST 09082-00100)

Speedometer

ON-VEHICLE INSPECTION OF SPEEDOMETER

(a) Using a speedometer tester, inspect the speedometer for allowable indicating error and check operation of the odometer.

NOTE: Tire wear and tire over or under inflation will increase indication error.

(b) Check the speedometer for pointer vibration and abnormal noises.

NOTE: Pointer vibration can be caused by a loose speedometer cable.

(km/h)

Standard indication	Allowable range
20	18 – 22
40	38 – 42
60	58 – 62
80	78 – 82
100	97 – 103
120	117 – 123

(mph)

Standard indication	Allowable range
20	19 – 21
40	39 – 41
60	59 – 61
80	78 – 82

Tachometer

ON-VEHICLE INSPECTION OF TACHOMETER

(a) Connect a tune-up test tachometer and start the engine.

(b) Compare the tester and tachometer indications.

If the error is excessive, replace the tachometer.

CAUTION:

- **Reversing the connection of the tachometer will damage the transistors and diodes inside.**
- **When removing or installing the tachometer, be careful not to drop it or subject it to heavy shocks.**

(rpm)

Standard indication	Allowable range	Standard indication	Allowable range
1,000	950 ± 30	5,000	4,900 ± 150
2,000	1,950 ± 60	6,000	5,900 ± 180
3,000	2,900 ± 90	7,000	6,900 ± 210
4,000	3,900 ± 120	8,000	7,900 ± 240

Fuel Gauge

INSPECTION OF FUEL GAUGE

1. INSPECT RECEIVER GAUGE OPERATION

Disconnect the connector from the fuel sender gauge.

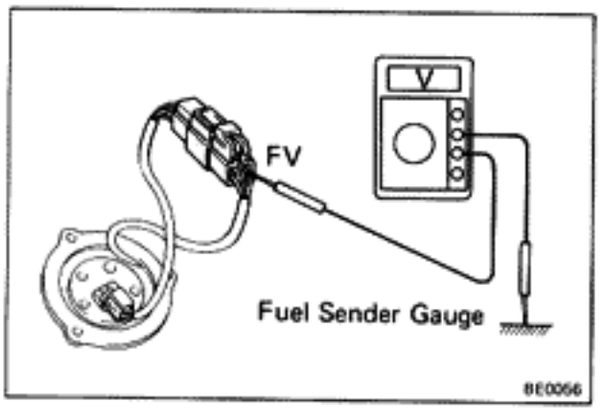

2. INSPECT POWER SOURCE LINE TO CONNECTOR

Inspect the power source line between terminal FV and body ground of the sender gauge connector.

Voltage: 4.0 – 6.0V

CAUTION: Never short circuit terminal FV.

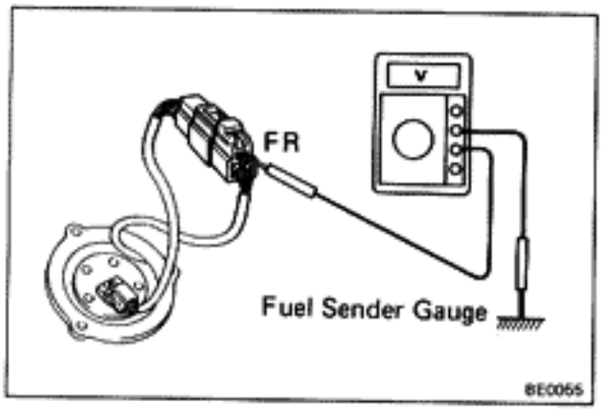

3. INSPECT OUTPUT SIGNAL VOLTAGE

Inspect the output signal voltage between terminal FR and body ground of the sender gauge connector.

Voltage:	**4.4 – 4.8V**	**at F level**
	3.27V	**at 1/2 level**
	2.3 – 2.7V	**at 1/4 level**
	0.3 – 0.5V	**at E level**

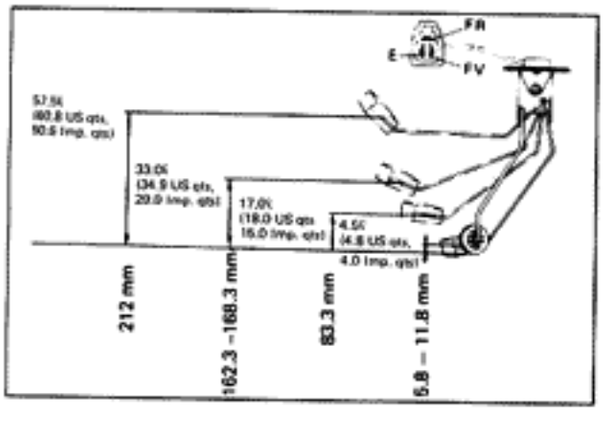

4. INSPECT SENDER GAUGE OPERATION

Inspect the resistance between terminals FR and E.

Resistance:	**270 – 310Ω**	**212 mm (8.35 in.)**
	186 – 226Ω	**162.3 – 168.3 mm (6.390 – 6.626 in.)**
	140 – 180Ω	**83.3 mm (3.280 in.)**
	17 – 33Ω	**5.8 – 11.8 mm (0.228 – 0.465 in.)**

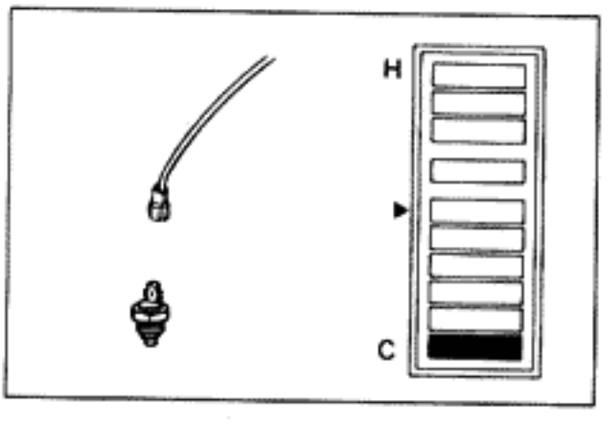

Water Temperature Gauge

INSPECTION OF WATER TEMPERATURE GAUGE

1. INSPECT RECEIVER GAUGE OPERATION

(a) Warm up the engine.

(b) Disconnect the connector from the sender gauge.

(c) Check that the indicator segment is at the lowest (dimmest) point with the ignition switch at ON position.

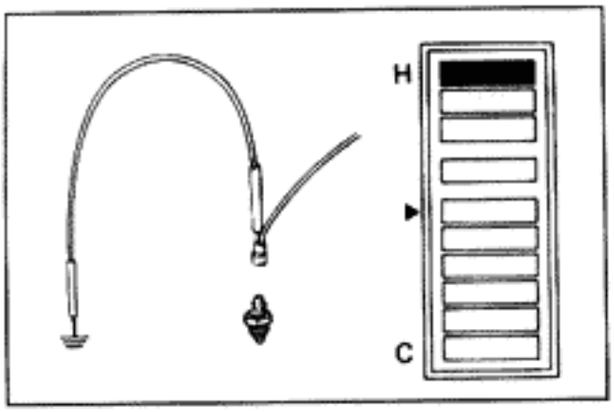

(d) Ground the connector of the sender gauge with the connector disconnected.

(e) Check that the top segmeter flashes with the ignition switch at ON position.

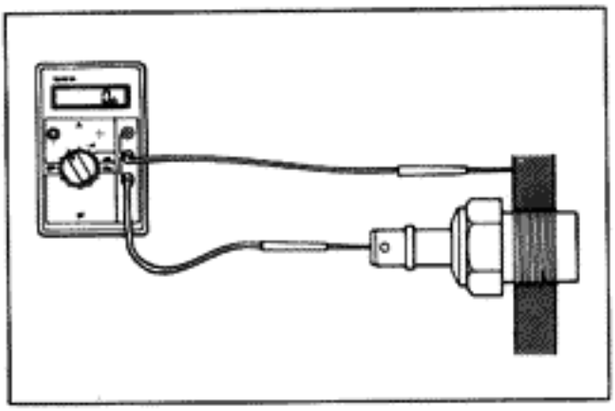

2. **INSPECT SENDER GAUGE OPERATION**

Inspect the resistance between the terminals of the sender gauge and body ground.

Resistance: **192 – 260 Ω 50°C (122°F)**
65 – 89 Ω 80°C (176°F)

REAR WINDOW DEFOGGER

Troubleshooting

Problem	Possible cause	Remedy	Page
Rear window defogger does not work	Circuit breaker OFF	Reset breaker and check for short	BE-4
	Defogger relay faulty	Check relay	BE-61
	Defogger switch faulty	Check switch	BE-61
	Defogger wire broken	Check wires	BE-62
	Wiring and ground faulty	Repair as necessary	

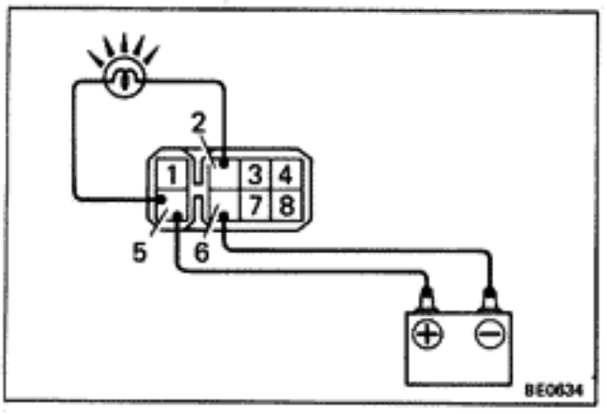

Rear Window Defogger Switch

INSPECTION OF REAR WINDOW DEFOGGER SWITCH

INSPECT SWITCH OPERATION

(a) Connect the positive (+) lead from the battery to terminal 5. Connect the negative (–) lead to terminal 6.

(b) Connect an ohmmeter between terminals 2 and 6.

(c) Check that there is continuity between terminals for 10 – 20 minutes with the switch turned on.

If operation is not as specified, replace the switch.

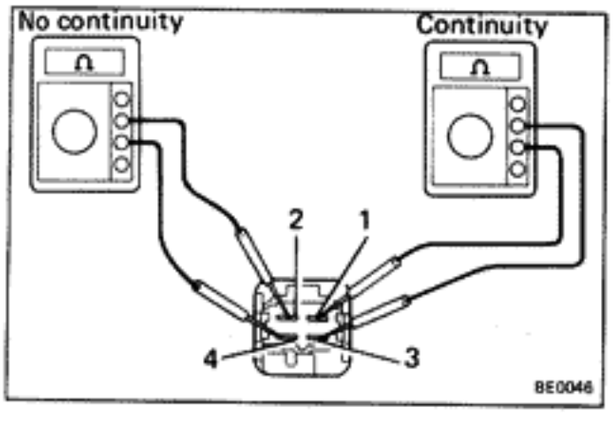

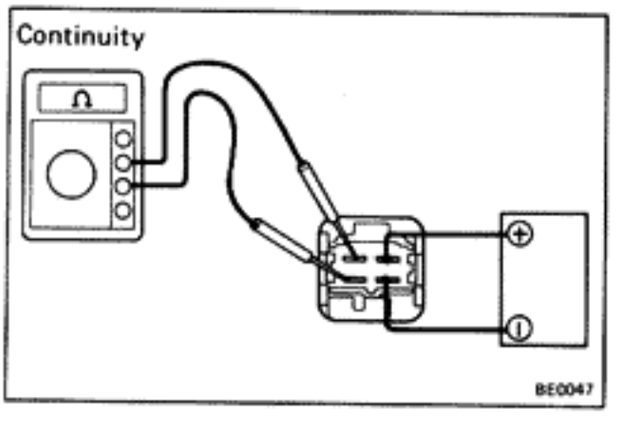

Rear Window Defogger Relay

INSPECTION OF REAR WINDOW DEFOGGER RELAY

1. INSPECT RELAY CONTINUITY

(a) Check that the there is continuity between terminals 1 and 3.

(b) Check that there is no continuity between terminals 2 and 4.

If continuity is not as specified, replace the relay.

2. INSPECT RELAY OPERATION

Connect the positive (+) lead from the battery to terminal 1 and connect the negative (–) lead from the battery to terminal 3. Then, check that there is continuity between terminals 2 and 4.

If operation is not as specified, replace the relay.

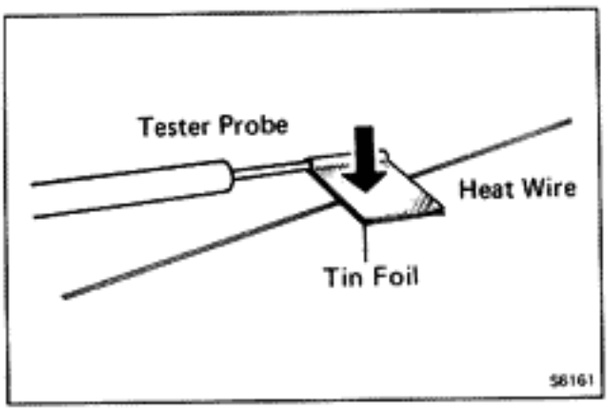

Rear Window Defogger Wires

CAUTION:

- **When cleaning the glass, use a soft, dry cloth, and wipe the glass in the direction of the wire. Take care not to damage the wires.**
- **Do not use detergents or glass cleaners with abrasive ingredients.**
- **When measuring voltage, wind a piece of tin foil around the tip of the negative probe and press the foil against the wire with your finger as shown.**

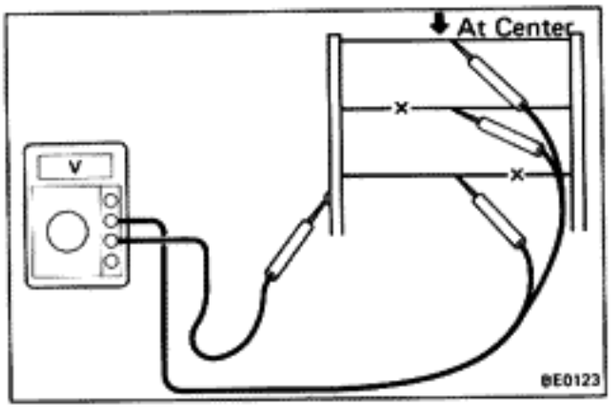

INSPECTION OF REAR WINDOW DEFOGGER WIRES

1. INSPECT FOR WIRE BREAKAGE

(a) Turn the defogger switch to ON.

(b) Inspect the voltage at the center of each heat wire.

Voltage	Criteria
Approx. 5V	Okay (No break in wire)
Approx. 10V or 0V	Broken wire

NOTE: If there is 10V, the wire is broken between the center of the wire and positive (+) end. If there is no voltage, the wire is broken between the center of the wire and ground.

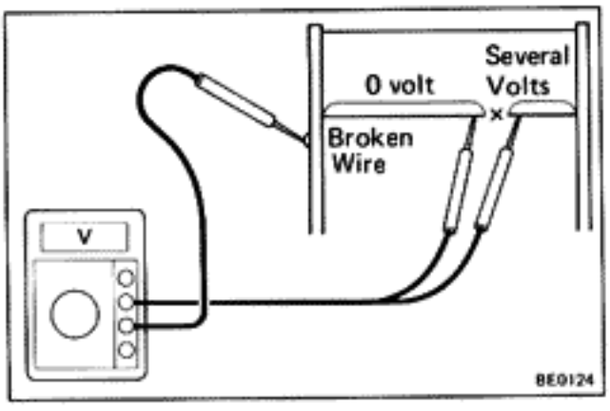

2. INSPECT FOR WIRE BREAKAGE POINT

(a) Place the voltmeter positive (+) lead against the defogger positive (+) terminal.

(b) Place the voltmeter negative (–) lead with the foil strip against the heat wire at the positive (+) terminal end and shift it toward the negative (–) terminal end.

(c) The point where the voltmeter deflects from zero to several volts is the place where the heat wire is broken.

NOTE: If the heat wire is not broken, the voltmeter will indicate 0V at the positive (+) end of the heat wire but gradually increase to about 12V as the meter probe is moved to the other end.

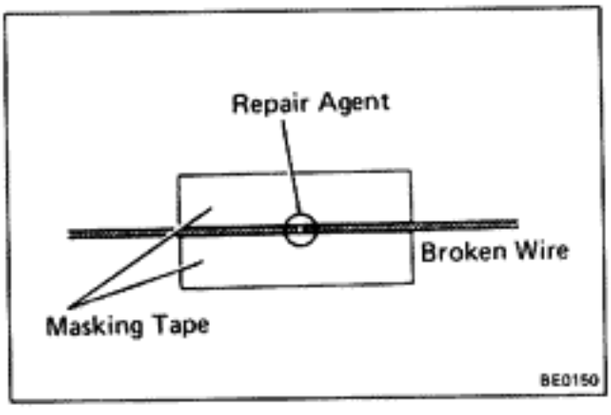

REPAIR OF REAR WINDOW DEFOGGER WIRES

1. CLEAN BROKEN WIRE TIPS WITH WHITE GASOLINE

2. PLACE MASKING TAPE ALONG BOTH SIDES OF WIRE TO BE REPAIRED

(a) Thoroughly mix the repair agent (Dupont paste No. 4817).

(b) Using a fine tip brush, apply a small amount to the wire.

(c) After a couple of minutes, remove the masking tape.

(d) Allow to stand at least 24 hours.

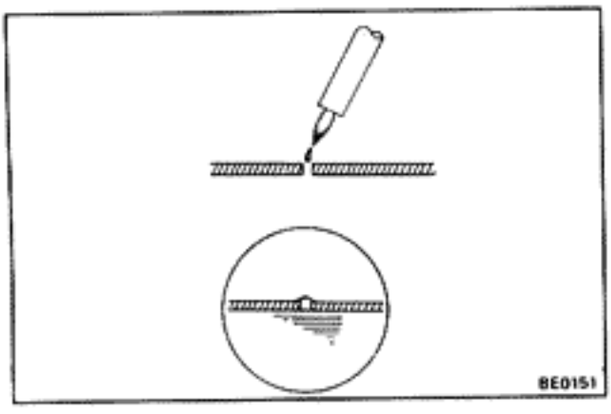

HEATER

Troubleshooting

Problem	Possible cause	Remedy	Page
Blower does not work when fan switch is on	Circuit breaker OFF	Reset breaker and check for short	BE-4
	Heater main relay faulty	Check relay	BE-63
	Heater blower switch faulty	Check switch	BE-63
	Heater blower resistor faulty	Check resistor	BE-64
	Heater blower motor faulty	Replace motor	
	Wiring or ground faulty	Repair as necessary	
Incorrect temperature output	Control cables broken or binding	Check cables	BE-64
	Heater hoses leaking or clogged	Replace hose	
	Water valve faulty	Replace valve	
	Air dampers broken	Repair dampers	
	Air ducts clogged	Repair ducts	
	Heater radiator leaking or clogged	Replace radiator	
	Heater control unit faulty	Repair control unit	

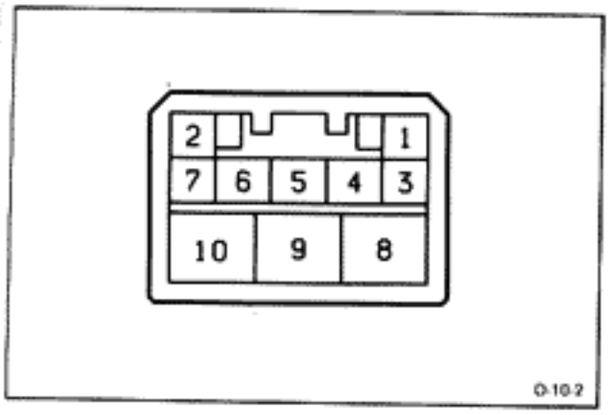

Heater Blower Switch

INSPECTION OF HEATER BLOWER SWITCH

INSPECT SWITCH CONTINUITY

Inspect heater blower switch continuity.

Switch position \ Terminal	10	4	9	5	8	6 *	7 *
OFF						○	○
I	○	○				○	○
II	○	○	○			○	○
III	○	○		○		○	○
IV	○	○			○	○	○

* For illumination light

If continuity is not as specified, replace the switch.

Heater Relay

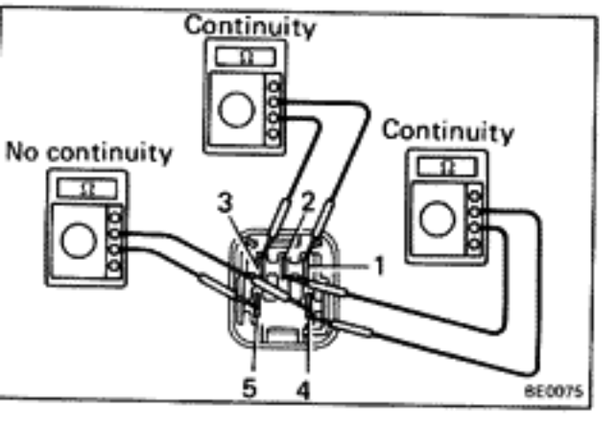

INSPECTION OF HEATER MAIN RELAY

1. INSPECT RELAY CONTINUITY

(a) Check that there is continuity between terminals 1 and 3.

(b) Check that there is continuity between terminals 2 and 4.

(c) Check that there is no continuity between terminals 4 and 5.

If continuity is not as specified, replace the relay.

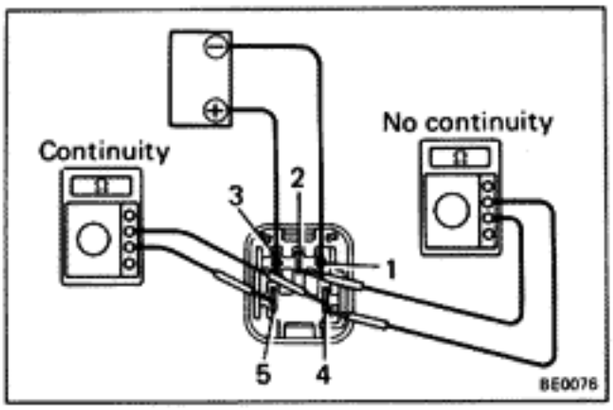

2. INSPECT RELAY OPERATION

(a) Apply battery voltage across terminals 1 and 3.

(b) Check that there is continuity between terminals 4 and 5.

(c) Check that there is no continuity between terminals 2 and 4.

If operation is not as specified, replace the relay.

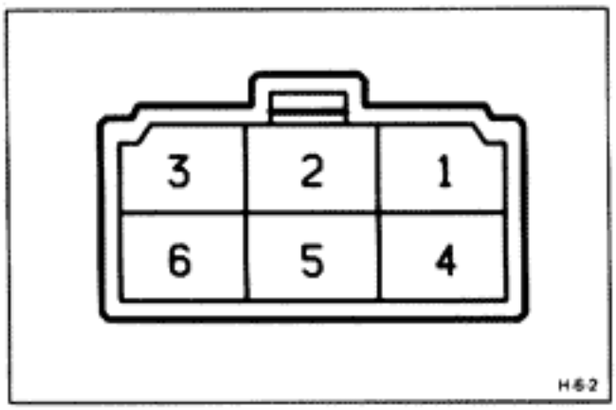

Heater Blower Resistor

INSPECTION OF HEATER BLOWER RESISTOR

INSPECT RESISTOR CONTINUITY

Check that there is continuity between terminals 1 and 3.

If there is no continuity, replace the resistor.

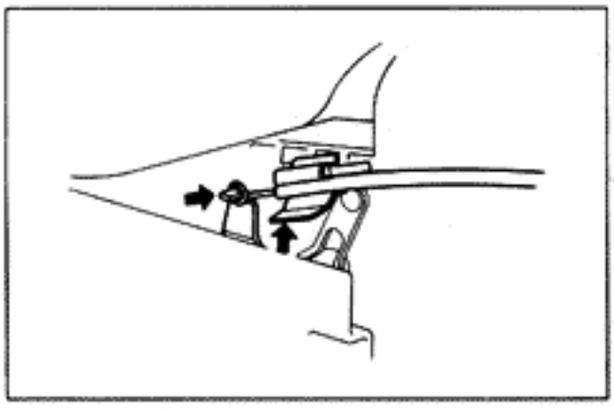

Heater Control

ADJUSTMENT OF HEATER CONTROL

SET AIR INLET DAMPER

Set the air inlet damper and control lever to "FRESH".

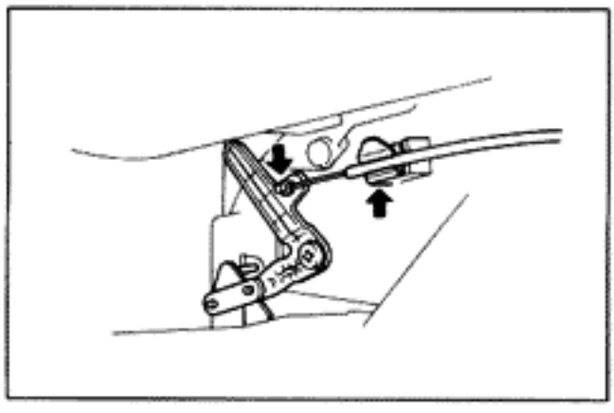

SET MODE SELECTOR DAMPER

Set the mode selector damper and control lever to "VENT".

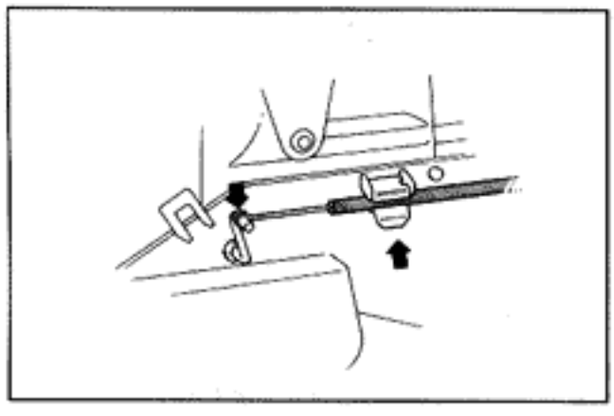

SET BALANCE DAMPER

Set the balance damper and control lever to the center position.

TEST CONTROL CABLE OPERATION

Move the control levers left and right and check for stiffness and binding through full range of the levers.

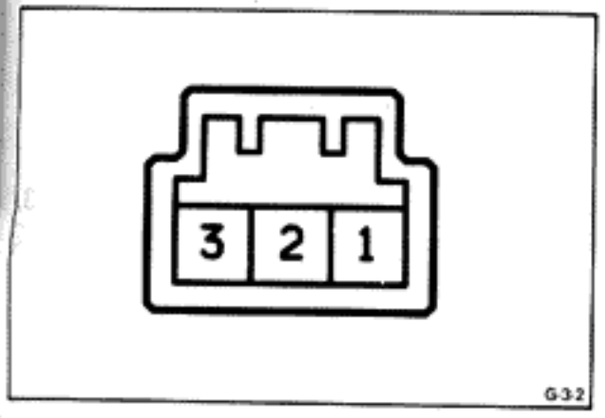

POWER WINDOW

Power Window Lock Switch

INSPECTION OF POWER WINDOW LOCK SWITCH

INSPECT SWITCH CONTINUITY

Inspect the switch continuity between terminals.

Switch position \ Terminal	1	2	3
LOCK	○—○		
OFF			
UNLOCK		○—○	

If continuity is not as specified, replace the switch.

Power Window Master Switch

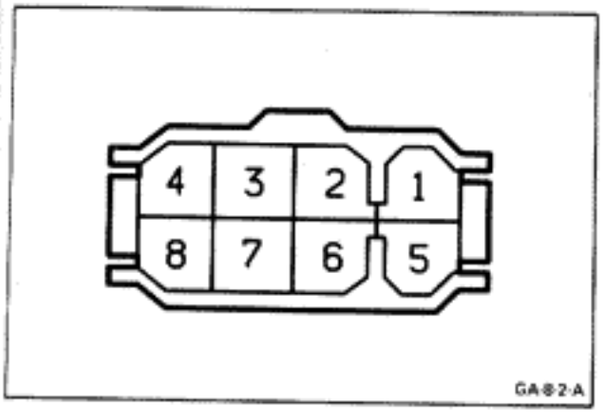

INSPECTION OF POWER WINDOW MASTER SWITCH

INSPECT SWITCH CONTINUITY

Switch	Left			Right			
Switch position \ Terminal	2	3	7	6	2	1	5
UP	○—○		○—○	○—○	○—○		
OFF		○—○—○		○—○—○			
DOWN	○—○	○—○		○—○		○—○	

If continuity is not as specified, replace the switch.

Power Window Door Switch

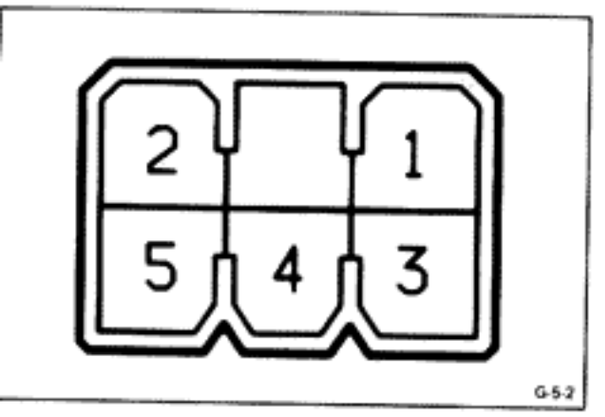

INSPECTION OF POWER WINDOW DOOR SWITCH

INSPECT SWITCH CONTINUITY

Switch position \ Terminal	2	1	5	4	3
UP	○—○		○—○		
OFF		○—○—○	○—○		○—○
DOWN	○—○	○—○			○—○

If continuity is not as specified, replace the switch.

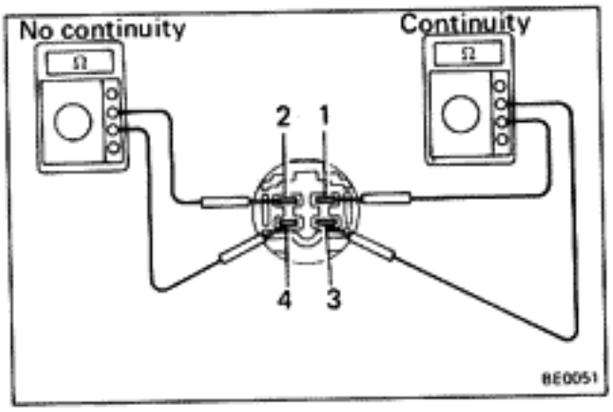

Power Main Relay

INSPECTION OF POWER MAIN RELAY

1. INSPECT RELAY CONTINUITY

Inspect that there is continuity between terminals 1 and 3. Inspect that there is no continuity between terminals 2 and 4.

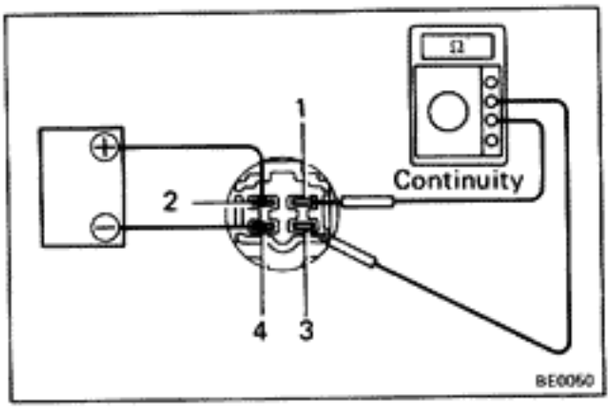

2. INSPECT RELAY OPERATION

Inspect the continuity between terminals 2 and 4 with battery voltage applied between terminals 1 and 3.

If continuity is not as specified, replace the relay.

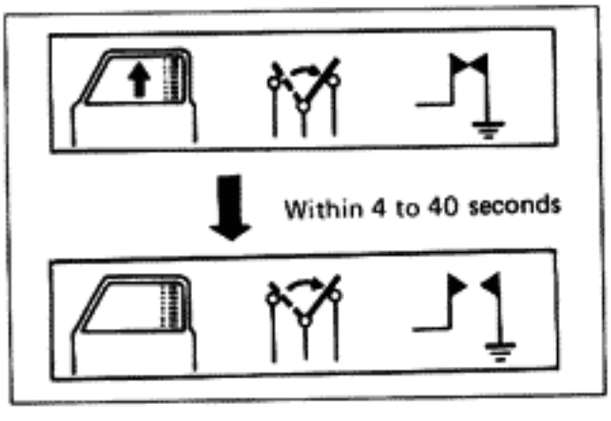

Power Window Motor

INSPECTION OF POWER WINDOW MOTOR

1. INSPECT CIRCUIT BREAKER OPERATION

(a) With the window in the full closed position, hold the power window switch at "UP" and check that there is a circuit breaker operation noise within 4 to 40 seconds.

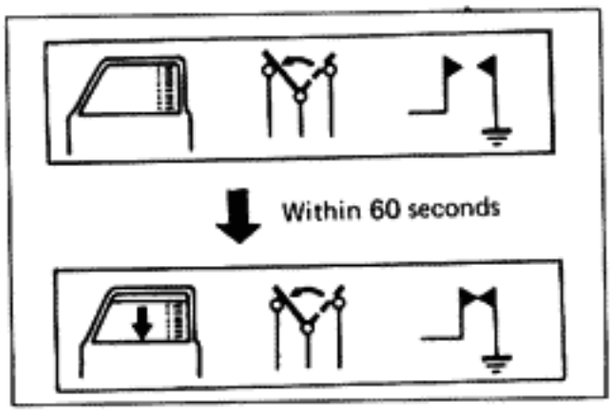

(b) With the window in the fully closed position, hold the switch at "DOWN" and check that the window begins to descend within 60 seconds.

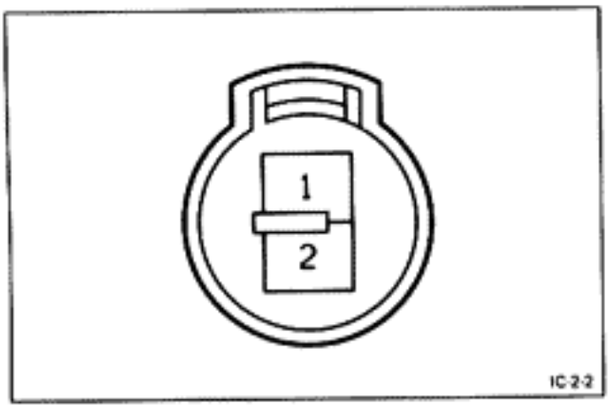

2. INSPECT MOTOR OPERATION

(a) Connect the positive (+) lead from the battery to terminal 1 and connect the negative (–) lead to the terminal 2, and check that the motor turns clockwise.

(b) Connect the positive (+) lead from the battery to terminal 2 and connect the negative (–) lead to the terminal 1, and check that the motor turns counter-clockwise.

If operation is not as specified, replace the motor.

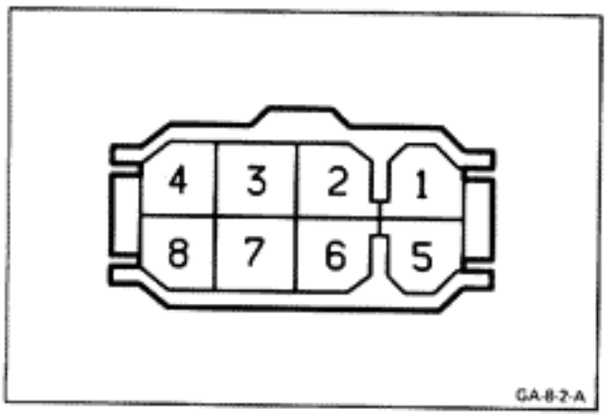

DOOR LOCK CONTROL SYSTEM

Door Lock Control Switch

INSPECTION OF DOOR LOCK CONTROL SWITCH

INSPECT SWITCH CONTINUITY

Switch position \ Terminal	8	6	4
LOCK	○——	——○	
OFF			
UNLOCK		○——	——○

If continuity is not as specified, replace the switch.

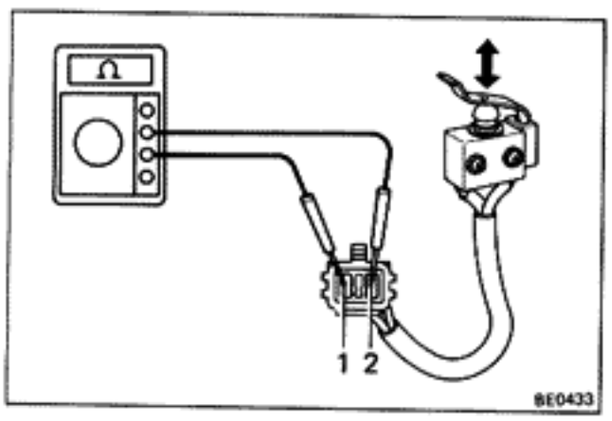

Key Unlock Switch

INSPECTION OF KEY UNLOCK SWITCH

INSPECT SWITCH OPERATION

(a) Check that there is continuity between terminals when the switch pin is pushed.

(b) Check that there is no continuity between terminals when the switch is free.

If operation is not as specified, replace the switch.

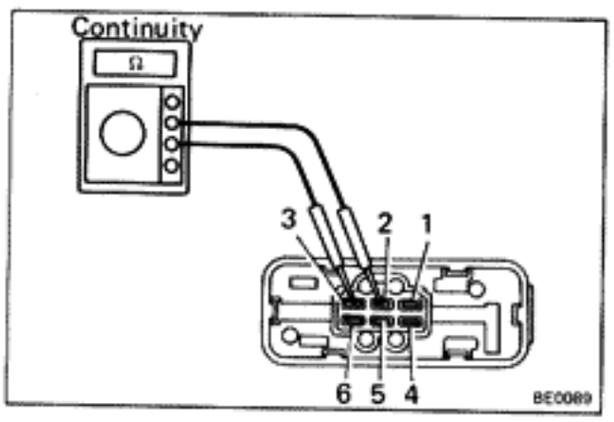

Door Lock Relay

INSPECTION OF DOOR LOCK RELAY

1. INSPECT RELAY CONTINUITY

(a) Check that there is continuity between terminals 2, 3 and 4.

(b) Check that there is no continuity between terminals 1, 2 and 6.

If continuity is not as specified, replace the relay.

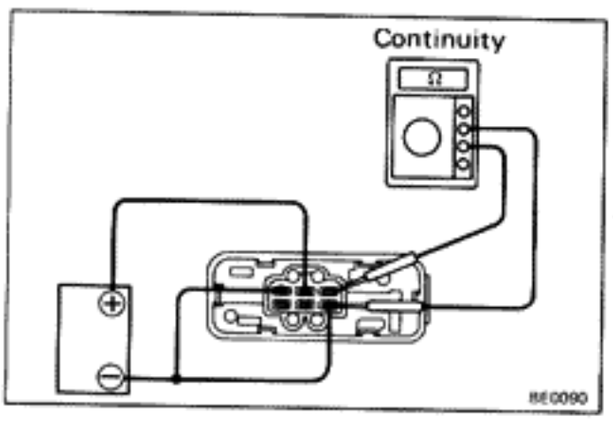

2. INSPECT RELAY OPERATION

(a) Connect the positive (+) lead from the battery to terminal 2. Connect the negative (−) lead to terminals 3 and 4.

(b) Check that there is continuity between terminals 1 and 4.
Check that there is continuity between terminals 3 and 6.

If there is no continuity, replace the relay.

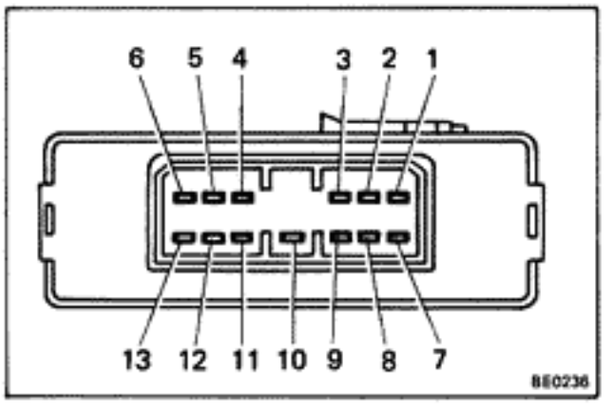

Door Lock Control Relay

INSPECTION OF DOOR LOCK CONTROL RELAY

INSPECT DOOR LOCK CONTROL RELAY CIRCUIT

Disconnect the relay and inspect the connector on wire harness side as shown in the chart below.

Terminal	Check Item	Tester Connection	Condition	Voltage or Continuity
2	Voltage	2-Body ground	–	Battery voltage
3	Continuity	3-4	–	Continuity
6	Continuity	6-Body ground	Turn door lock control switch to LOCK.	Continuity
			Turn door lock control switch to UNLOCK or OFF.	No continuity
7	Continuity	7-Body ground	Turn LH key unlock switch on.	Continuity
			Turn LH key unlock switch off.	No continuity
9	Continuity	9-Body ground	LH door lock knob pushed.	No continuity
			LH door lock knob pulled.	Continuity
10	Continuity	10-Body ground	–	Continuity
11	Continuity	11-Body ground	RH door lock knob pushed.	No continuity
			RH door lock knob pulled.	Continuity
12	Continuity	12-Body ground	Turn unlock warning switch and LH door courtesy switch off.	Continuity
			Turn unlock warning switch and/or door LH door courtesy switch off.	No continuity
13	Continuity	13-Body ground	Turn RH key unlock switch on and/or door lock control switch to UNLOCK.	Continuity
			Turn RH key unlock switch off and/or door lock control switch to LOCK or OFF.	No continuity

If circuit is correct as specified, replace the relay.

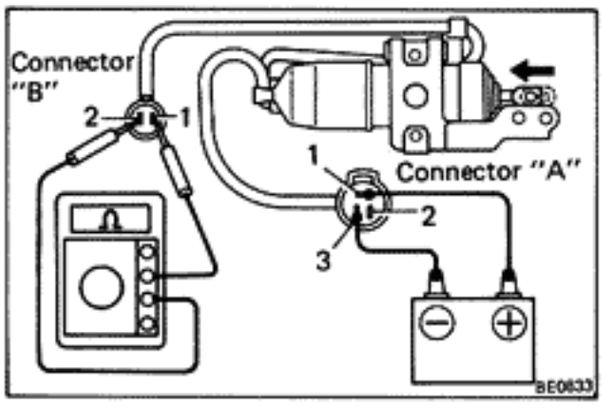

Door Lock Solenoid

INSPECTION OF DOOR LOCK SOLENOID

INSPECT SOLENOID OPERATION

(a) Connect the positive (+) lead from the battery to terminal A-1. Connect the negative (–) lead to terminal A-3. Check that the solenoid operates locks direction.

(b) Check that there is no continuity between terminals B-1 and B-2.

(c) Connect the positive (+) lead from the battery to terminal 2. Connect the negative (–) lead to terminal A-3. Check that the solenoid operates locks direction.

(d) Check that there is continuity between terminals B-1 and B-2.

If there is no solenoid operation, replace the solenoid.

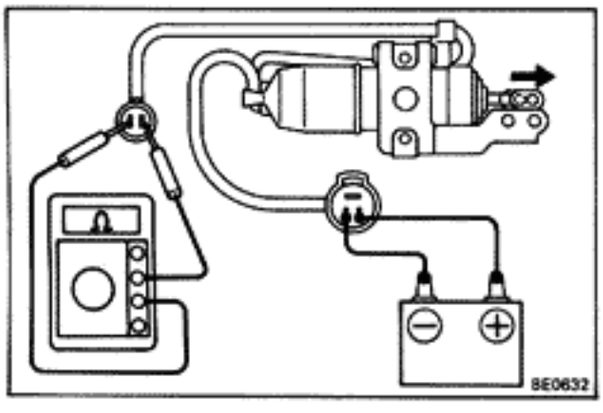

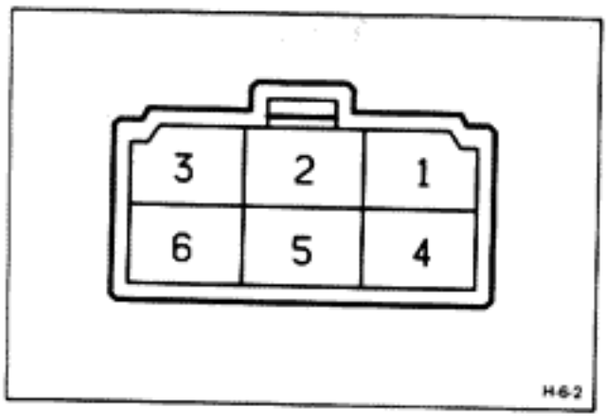

SUN ROOF

Sun Roof Switch

INSPECTION OF SUN ROOF SWITCH

INSPECT SWITCH CONTINUITY

Switch position \ Terminal	3	1	4	5
OPEN	○—○		○—○	
OFF		○—○	○—○	
CLOSE	○	○—○		○

If continuity is not as specified, replace the switch.

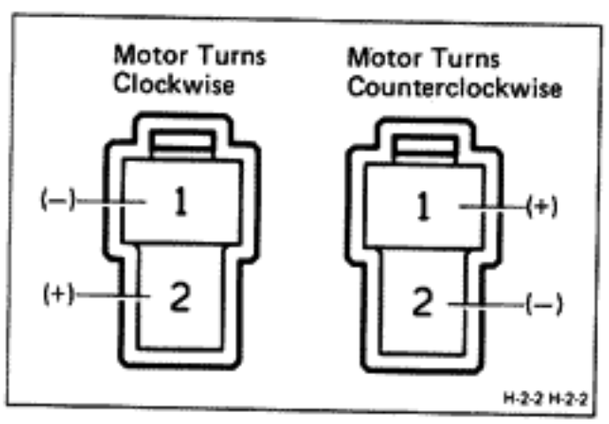

Sun Roof Motor

INSPECTION OF SUN ROOF MOTOR

INSPECT MOTOR OPERATION

(a) Connect the positive (+) lead from the battery to terminal 2 (red wire) and the negative (–) lead to terminal 1 (green wire), and check that the motor turns clockwise.

(b) Connect the positive (+) lead from the battery to terminal 1 (green wire) and the negative (–) lead to terminal 2 (red wire), and check that the motor turns counterclockwise.

If operation is not as specified, replace the motor.

Power Main Relay

INSPECTION OF POWER MAIN RELAY

INSPECT RELAY CONTINUITY AND OPERATION

(See Power Main Relay on page BE-66)

CRUISE CONTROL SYSTEM
Wiring Diagram

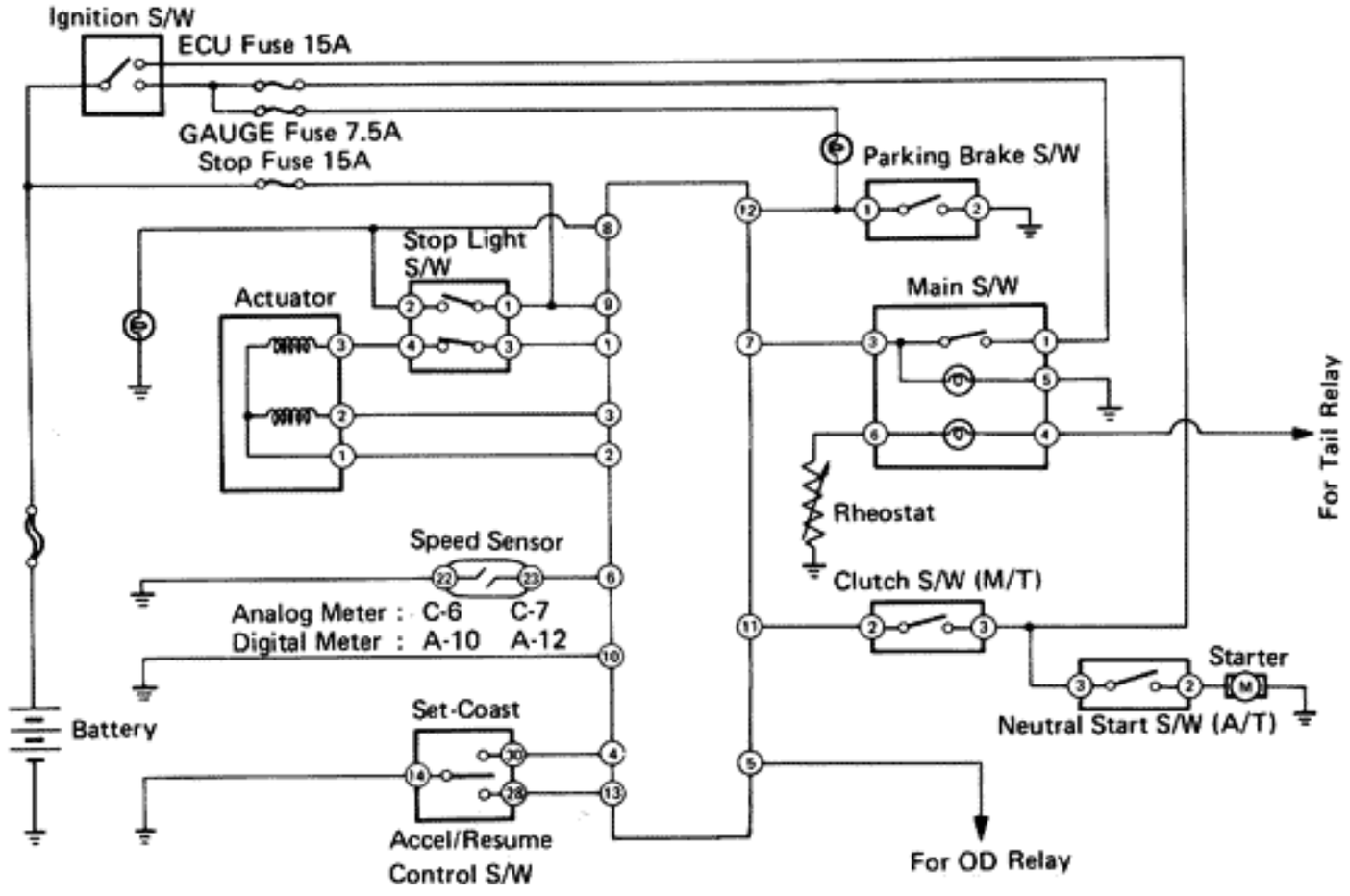

Parking Brake Switch



Clutch Switch



Stop Light Switch



Cruise Control Computer

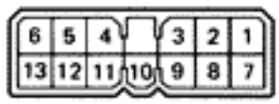

Main Switch





Speed Sensor (Analog Meter)



Control Switch



Actuator



Neutral Start Switch



Speed Sensor (Digital Meter)

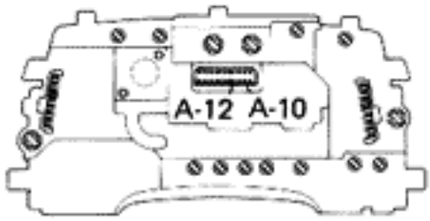

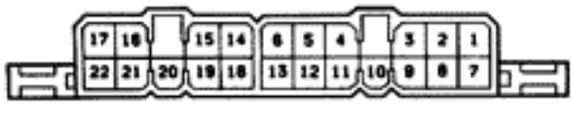

Troubleshooting

Problem	Inspection Item	No.
Cruise control does not operate.	Inspection of power source circuit	A
Vehicle speed does not reduce when coast switch turned on.	Inspection of control switch and circuit.	B
Vehicle does not accelerate when accel switch turned on.		
Vehicle speed does not return to memorized speed when resume switch turned on.		
Set speed deviates on high side.	Inspection of actuator and circuit	C
Set speed deviates on low side.		
Vehicle speed does not fluctuate when set switch turned on.	Inspection of actuator and circuit Inspection of speed sensor and circuit	C H
Setting speed does not cancel when brake pedal depressed.	Inspection of stop light switch and circuit	D
Setting speed does not cancel when parking brake pulled.	Inspection of parking brake switch and circuit	E
Setting speed does not cancel when clutch pedal depressed (M/T only).	Inspection of clutch switch and circuit	F
Setting speed does not cancel when shifted to "N" range (A/T only).	Inspection of neutral start switch and circuit	G
Speed can be set below 20 km/h (12 mph).	Inspection of speed sensor and circuit	H
Cruise control will not disengage even below 20 km/h (12 mph).		

A INSPECTION OF SOURCE CIRCUIT

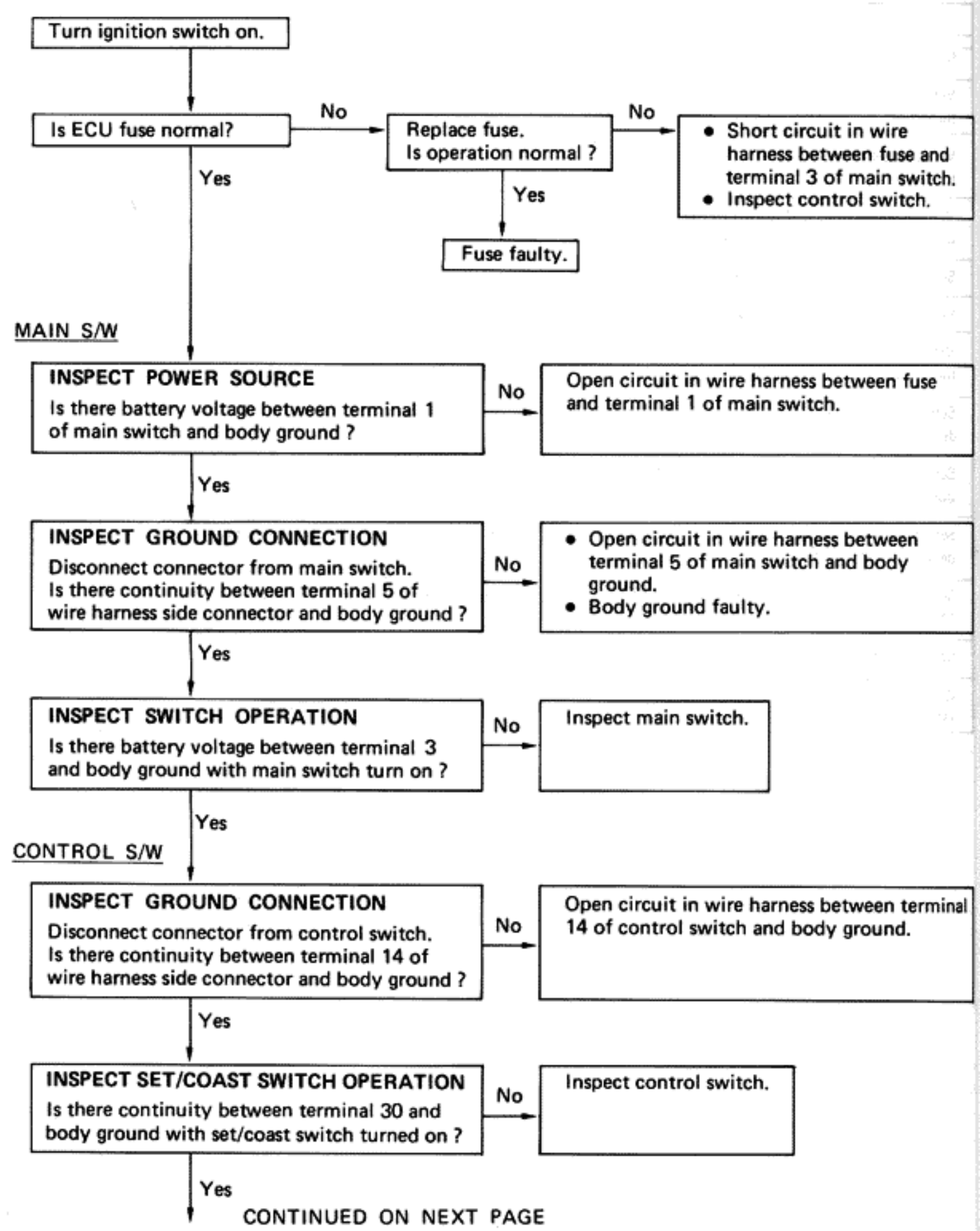

CONTINUED ON NEXT PAGE

CONTINUED FROM PREVIOUS PAGE

Yes

Is there continuity between terminal 30 and body ground with set/coast switch turned off ?

Yes → Inspect control switch.

No

INSPECT ACCEL/RESUME SWITCH OPERATION

Is there continuity between terminal 28 and body ground when accel/resume switch turned on ?

No → Inspect the control switch.

Yes

STOP LIGHT S/W

INSPECT RELEASE VALVE CIRCUIT

Disconnect connector from computer.
Is resistance value about 68 Ω between terminal 1 and terminal 2 of computer with brake pedal returned ?

No →
- Open or short circuit in wire harness between terminal 4 of stop light switch and terminal 3 of actuator.
- Open circuit in wire harness between terminal 1 of actuator and terminal 2 of computer.
- Inspect stop light switch.
- Inspect actuator.

Yes

INSPECT STOP LIGHT SWITCH OPERATION

Is there continuity between terminals 1 and 2 with brake pedal depressed ?

No → Inspect stop light switch.

Yes

COMPUTER

Disconnect computer and inspect connector on wire harness side as follows.

INSPECT POWER SOURCE

Is there battery voltage between terminal 7 and body ground with main switch turned on ?

No → Open or short circuit in wire harness between terminal 7 of computer and terminal 3 of main switch.

Yes

INSPECT GROUND CONNECTION

Is there continuity between terminal 10 and body ground ?

No →
- Open circuit in wire harness between terminal 10 and body ground.
- Body ground faulty.

Yes

CONTINUED ON NEXT PAGE

CONTINUED FROM PREVIOUS PAGE

Yes

INSPECT SET/COAST SWITCH CIRCUIT

Is there continuity between terminal 4 and body ground with set/coast switch turned on ?

No →
- Open circuit in wire harness between terminal 4 of computer and terminal 30 of control switch.
- Inspect control switch.

Yes

Is there continuity between terminal 4 and body ground with set/coast switch turned off ?

Yes →
- Short circuit in wire harness between terminal 4 of computer and terminal 30 of control switch.
- Inspect control switch.

No

INSPECT ACCEL/RESUME SWITCH CIRCUIT

Is there continuity between terminal 13 and body ground with accel/resume switch turned on ?

No →
- Open circuit in wire harness between terminal 13 of computer and terminal 28 of control switch.
- Inspect control switch.

Yes

Is there continuity between terminal 13 and body ground with accel/resume switch turned off ?

Yes →
- Short circuit in wire harness between terminal 13 of computer and terminal 28 of control switch.
- Inspect control switch.

No

INSPECT CONTROL VALVE CIRCUIT

Is resistance value about 30 Ω between terminals 2 and 3 ?

No →
- Open or short circuit in wire harness between terminal 3 of computer and terminal 2 of actuator.
- Open circuit in wire harness between terminal 1 of actuator and terminal 2 of computer.
- Inspect actuator.

Yes

INSPECT RELEASE VALVE CIRCUIT

Is resistance value about 68 Ω between terminals 1 and 2 with brake pedal returned ?

No →
- Open or short circuit in wire harness between terminal 1 of computer and terminal 3 of actuator.
- Open circuit in wire harness between terminal 1 of actuator and terminal 2 of computer.
- Inspect stop light switch.

Yes

CONTINUED ON NEXT PAGE

CONTINUED FROM PREVIOUS PAGE

Yes

INSPECT CLUTCH SWITCH CIRCUIT (M/T)

Is there continuity between terminal 11 and body ground with clutch pedal returned ?

Yes → • Short circuit in wire harness between terminal 11 of computer and terminal 3 of clutch switch.
• Inspect clutch switch.

No

INSPECT NEUTRAL START SWITCH CIRCUIT (A/T)

Is there battery voltage between terminal 11 and body ground when shifting except to "N" range ?

Yes → • Short circuit in wire harness between terminal 11 of computer and terminal 3 of neutral start switch.
• Inspect neutral start switch.

No

INSPECT PARKING BRAKE SWITCH CIRCUIT

Is there battery voltage between terminal 12 and body ground with parking brake lever returned ?

No → • Short circuit in wire harness between terminal 12 of computer and terminal 1 parking brake switch.
• Inspect parking brake switch.

Yes

INSPECT SPEED SENSOR CIRCUIT

Disconnect connector from combination meter. Is there continuity between terminal C-7 (analog meter) or A-12 (digital meter) of wire harness side connector and terminal 6 of computer ?

No → Open circuit in wire harness between terminal C-7 (analog meter) or A-12 (digital meter) of combination meter and terminal 6 of computer.

Yes

Disconnect connector from combination meter. Is there continuity between terminal 6 and body ground ?

Yes → Short circuit in wire harness between terminal 6 of computer and terminal 20 of combination meter.

No

SPEED SENSOR

INSPECT GROUND CONNECTION

Disconnect connector from combination meter. Is there continuity between terminal C-6 (analog meter) or A-10 (digital meter) of wire harness side connector and body ground ?

No → • Open circuit in wire harness between terminal C-6 (analog meter) or A-10 (digital meter) and body ground.
• Body ground faulty.

Yes

INSPECT SPEED SENSOR OPERATION

Is speed sensor operation normal ?

(See page BE-83)

No → Speed sensor faulty.

Yes

CONTINUED ON NEXT PAGE

CONTINUED FROM PREVIOUS PAGE

ACTUATOR

Yes

INSPECT ACTUATOR OPERATION
Is actuator operation normal ?
(See page BE-84)

No → Replace actuator.

Yes

Replace computer.

B INSPECTION OF CONTROL SWITCH CIRCUIT

Turn ignition switch off.

CONTROL S/W

INSPECT SWITCH OPERATION
Is there continuity between terminal 28 and body ground with accel/resume switch turned on ?

No → Inspect control switch.

Yes

Is there continuity between terminal 28 and body ground with accel/resume switch turned off ?

Yes → Inspect control switch.

COMPUTER

No

INSPECT ACCEL/RESUME SWITCH CIRCUIT
Is there continuity between terminal 13 and body ground with accel/resume switch turned on ?

No → Open circuit in wire harness between terminal 13 of computer and terminal 28 of control switch.

ACTUATOR

Yes

INSPECT ACTUATOR OPERATION
Is actuator operation normal ?
(See page BE-84)

No → Replace actuator.

Yes

Replace computer.

C INSPECTION OF ACTUATOR CIRCUIT

Turn ignition switch off.

ACTUATOR

INSPECT CABLE FREEPLAY
Is control cable freeplay less than 10 mm (0.39 in.) ?

No → Adjust control cable freeplay.

Yes

INSPECT ACUTATOR OPERATION
Disconnect connector from actuator.
Inspect actuator operation. (See page BE-84)
Is actuator operation normal ?

No → Replace actuator.

Yes

COMPUTER

INSPECT ACTUATOR CIRCUIT
Is resistance value between computer terminals correct ?
Between terminals 1 and 2 about 68 Ω
Between terminals 2 and 3 about 30 Ω

No → Open or short circuit in wire harness between actuator and computer.

Yes

Replace computer.

D INSPECTION OF STOP LIGHT SWITCH CIRCUIT

Turn ignition switch on.

↓

Is stop fuse normal ?

No → • Short circuit in wire harness between terminal 8 of computer and fuse.
• Short circuit in wire harness between terminal 9 of computer and fuse.

Yes

COMPUTER

↓

Disconnect computer and inspect connector on wire harness side as follows.

↓

INSPECT RELEASE VALVE CIRCUIT
Is there continuity between terminal 1 and 2 with brake pedal depressed ?

Yes → Inspect stop light switch.

No

↓

INSPECT STOP FUSE CIRCUIT
Is there battery voltage between terminal 9 and body ground ?

No → Open circuit in wire harness between terminal 9 of computer and STOP fuse.

Yes

↓

INSPECT STOP LIGHT SWITCH CIRCUIT
Is there battery voltage between terminal 8 and body ground with brake pedal depressed ?

No → Open or short circuit in wire harness between terminal 8 of computer and terminal 2 of stop light switch.

Yes

↓

Replace computer.

E INSPECTION OF PARKING BRAKE SWITCH

Turn ignition switch on.

COMPUTER

INSPECT PARKING BRAKE SWITCH CIRCUIT
Disconnect connector from computer.
Is there battery voltage between terminal 12 of wire harness side connector and body ground ?

No →
- Open circuit in wire harness between terminal 12 of computer and terminal 1 parking brake switch.
- Inspect parking brake switch.

Yes ↓

Replace computer.

F INSPECTION OF CLUTCH SWITCH CIRCUIT

Turn ignition switch on.

CLUTCH S/W

INSPECT GROUND CONNECTION
Is there continuity between terminal 3 and body ground ?

No → Open circuit in wire harness between terminal 3 and body ground.

Yes ↓

COMPUTER

INSPECT CLUTCH SWITCH CIRCUIT
Disconnect connector from computer.
Is there continuity between terminal 11 of wire harness side connector and body ground with clutch pedal depressed ?

No →
- Open circuit in wire harness between terminal 11 of computer and terminal 2 of clutch switch.
- Inspect clutch switch.

Yes ↓

Replace computer.

G INSPECTION OF NEUTRAL START SWITCH CIRCUIT

Turn ignition switch on.

NEUTRAL START S/W

INSPECT GROUND CONNECTION
Is there continuity between terminal 2 and body ground ?

No → Open circuit in wire harness between terminal 2 and body ground.

Yes

COMPUTER

INSPECT NEUTRAL START SWITCH CIRCUIT
Disconnect connector from computer.
Is there continuity between terminal 11 of wire harness side connector and body ground when shifted to "N" range ?

No →
- Open circuit in wire harness between terminal 11 of computer and terminal 3 of neutral start switch.
- Inspect neutral start switch.

Yes

Replace computer.

H INSPECTION OF SPEED SENSOR CIRCUIT

Turn ignition switch on.

SPEED SENSOR

INSPECT GROUND CONNECTION
Disconnect connector from combination meter.
Is there continuity between terminal C-6 (analog meter) or A-10 (digital meter) of wire harness side connector and body ground ?

Yes → Short circuit in wire harness between terminal C-6 (analog meter) or A-10 (digital meter) and body ground.

No

COMPUTER

INSPECT SPEED SENSOR CIRCUIT
Disconnect connector from combination meter.
Is there continuity between terminal C-7 (analog meter) or A-12 (digital meter) of wire harness side connector and terminal 6 of computer ?

No → Open circuit in wire harness between terminal C-7 (analog meter) or A-12 (digital meter) of combination meter and terminal 6 of computer.

Yes

INSPECT SPEED SENSOR OPERATION
Is speed sensor operation normal?
(See page BE-83)

No → Speed sensor faulty.

Yes

Replace computer.

Cruise Control Computer Circuit

INSPECTION OF COMPUTER CIRCUIT

Disconnect the computer and inspect the connector on the wire harness side as shown in the chart below.

Terminal	Connection or Measure Item	Check Item	Tester Connection	Condition	Voltage or Resistance Value
1	Stop Light Switch and Release Valve	Resistance	1 – 2	Brake pedal returned	About 68 Ω
2	Release Valve and Control Valve	–	–	–	–
3	Control Valve	Resistance	3 – 2	–	About 30 Ω
4	Control Switch (Set/Coast)	Continuity	4 – Body Ground	Turn set/coast switch on Turn set/coast switch off	Continuity No continuity
5	OD Relay	–	–	–	–
6	Speed Sensor	–	–	–	–
7	Main Switch	Voltage	7 – Body Ground	Turn ignition switch and main switch on Turn ignition switch and main switch off	Battery voltage No voltage
8	Stop Light Switch	Voltage	8 – Body Ground	Brake pedal depressed Brake pedal returned	Battery voltage No voltage
9	STOP Fuse	Voltage	9 – Body Ground	–	Battery voltage
10	Body Ground	Continuity	10 – Body Ground	–	Continuity
11	Clutch Switch Neutral Switch	Continuity	11 – Body Ground	Clutch pedal depressed or shift into "N" range Clutch pedal returned or shift into except "N" range	Continuity No continuity
12	Parking Brake Switch	Voltage	12 – Body Ground	Parking brake pulled Parking brake returned	No voltage Battery voltage
13	Control Switch (Accel/Resume)	Continuity	13 – Body Ground	Turn accel/resume switch on Turn accel/resume switch off	Continuity No continuity

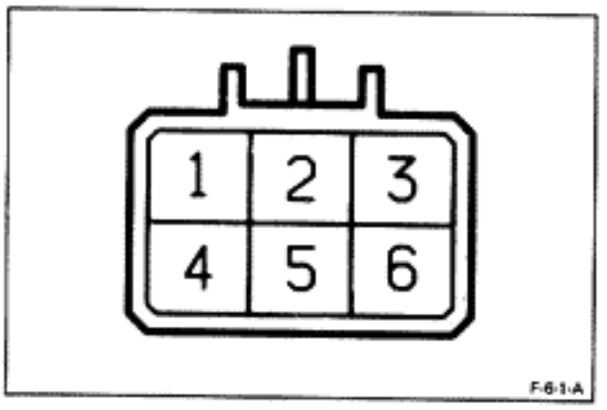

Main Switch

INSPECTION OF MAIN SWITCH

INSPECT SWITCH CONTINUITY

Switch position \ Terminal	1	2	3	4	5
OFF			○		○
ON	○	○	○		○

If continuity is not as specified, replace the switch.

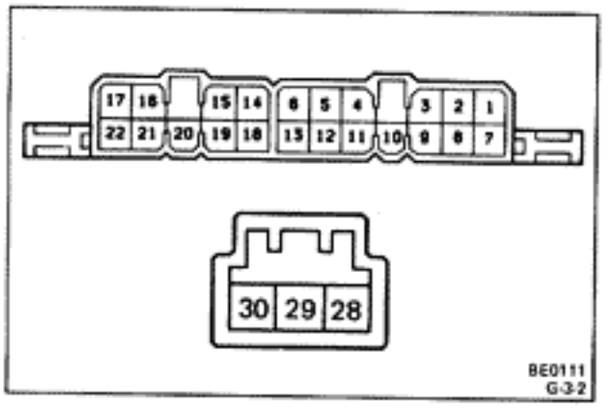

Control Switch

INSPECTION OF CONTROL SWITCH

INSPECT SWITCH CONTINUITY

Inspect the switch continuity between terminals.

Switch position \ Terminal	28 SR	30 SS	14 EW
SET/COAST		○	○
OFF			
ACCEL/RESUME	○		○

If continuity is not as specified, replace the switch.

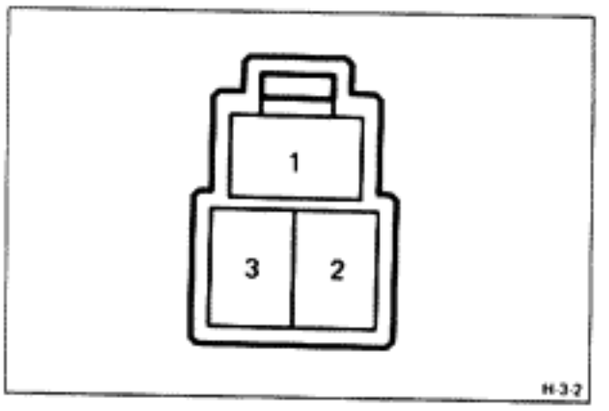

Clutch Switch

INSPECTION OF CLUTCH SWITCH

INSPECT SWITCH CONTINUITY

(a) Check that there is continuity between terminals 2 and 3 with the clutch pedal depressed.

(b) Check that there is no continuity between terminals 2 and 3 with the clutch pedal returned.

If continuity is not as specified, replace the switch.

Neutral Start Switch

(See page AT-104)

Parking Brake Switch

(See step 3 on page BE-30)

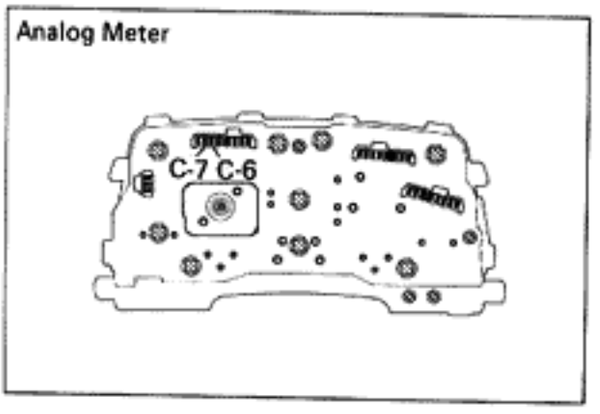

Speed Sensor

INSPECTION OF SPEED SENSOR

1. INSPECT SENSOR CONTINUITY (ANALOG METER)

Check that there is continuity between terminals C-6 and C-7 four times per each revolution of the shaft.

If continuity is not as specified, replace the sensor.

2. INSPECT SENSOR CONTINUITY (DIGITAL METER)
(See page BE-42)

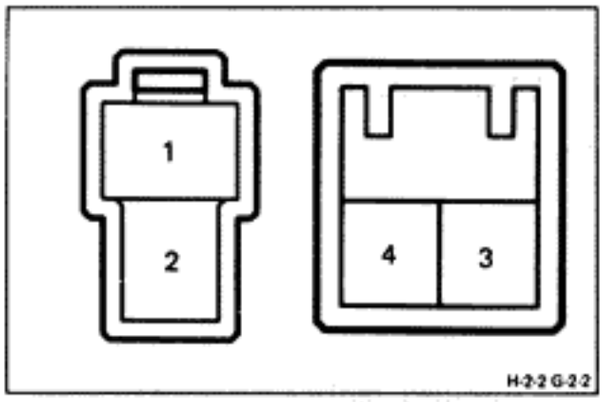

Stop Light Switch

INSPECTION OF STOP LIGHT SWITCH

INSPECT SWITCH CONTINUITY

Terminal / Brake pedal position	1	2	3	4
Brake pedal depressed	○	○		
Brake pedal returned			○	○

If continuity is not as specified, replace the switch.

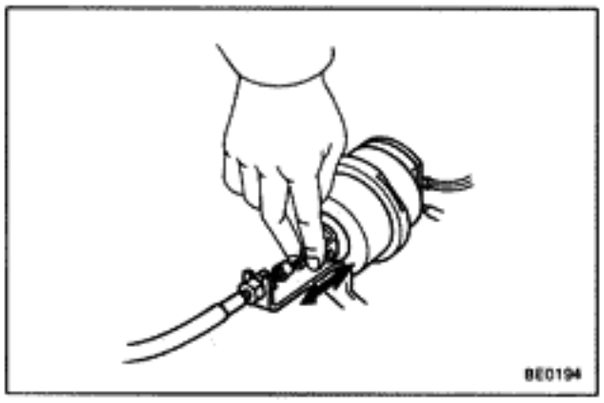

Actuator

INSPECTION OF ACTUATOR

1. INSPECT CONTROL CABLE FREEPLAY

Inspect that the control cable freeplay is less than 10 mm (0.39 in.).

If necessary, adjust the control cable freeplay.

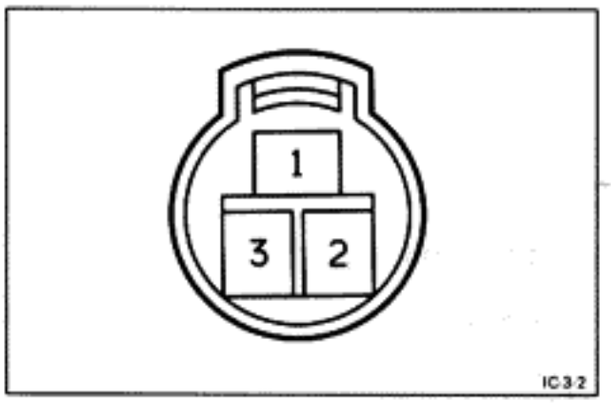

2. INSPECT ACTUATOR RESISTANCE

Using an ohmmeter, measure the resistance value between terminals as follows.

Resistance: 1 – 2 about 30 Ω
1 – 3 about 68 Ω

If the resistance value is not as specified, replace the actuator.

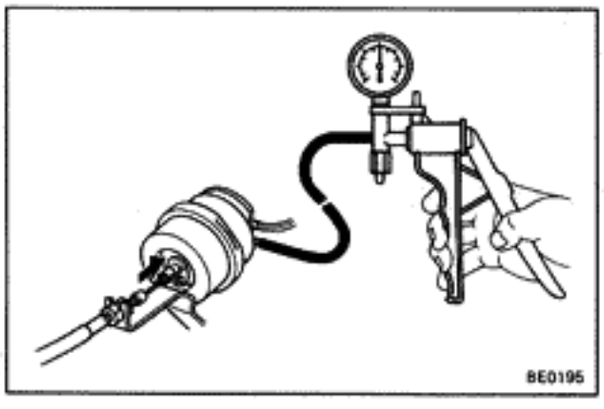

3. INSPECT ACTUATOR OPERATION

Connect the positive (+) lead from the battery to terminals 2 and 3. Connect the negative (–) lead to terminal 1.

(a) Slowly apply vacuum from 0 – 300 mmHg (0 – 11.81 in.Hg, 0 – 40.0 kPa), and check that the control cable can be pulled smoothly.

(b) With the vacuum stabilized, check that the control cable does not return.

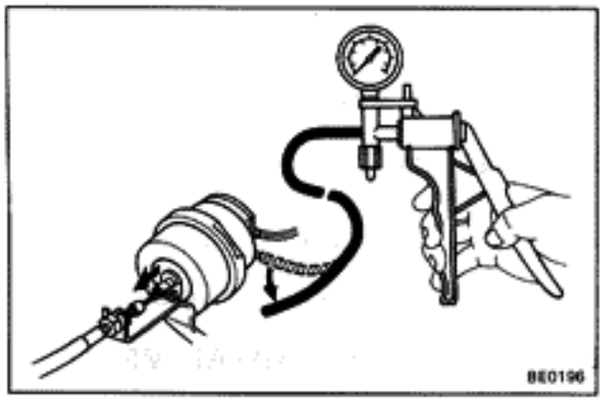

(c) Disconnect terminal 2 or 3 and check that the control cable returns to its original position and the vacuum returns to 0 mmHg (0 in.Hg, 0 kPa).

If operation is not as specified, replace the actuator.

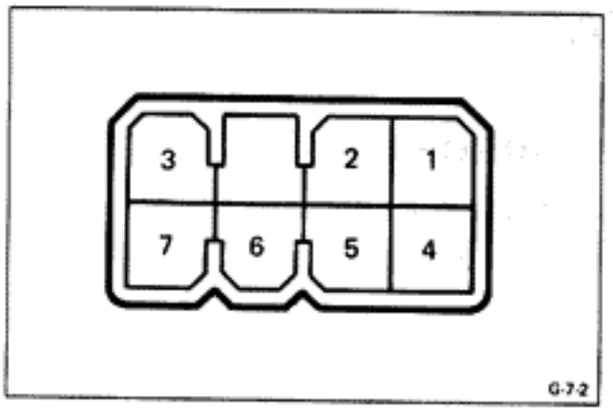

REMOTE CONTROL MIRROR

Outer Mirror Switch

INSPECTION OF OUTER MIRROR SWITCH

INSPECT SWITCH CONTINUITY

Mirror	Left Mirror					Right Mirror			
Terminal / Switch position	7	6	2	1	3	1	2	5	4
Up	○		○	○		○	○		○
Down	○		○		○		○		○
Left		○	○		○		○	○	
Right		○		○	○	○		○	

If continuity is not as specified, replace the switch.

Remote Control Mirror

INSPECTION OF REMOTE CONTROL MIRROR

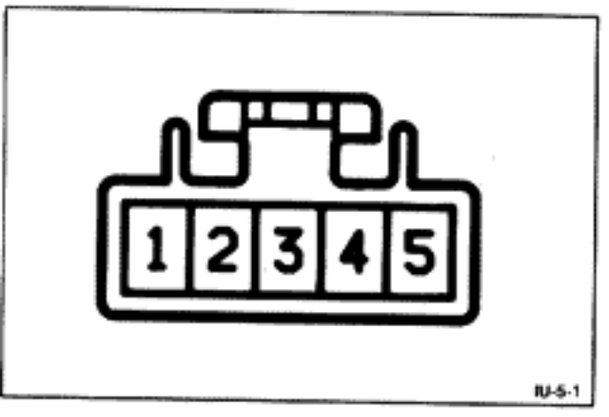

1. INSPECT LEFT MIRROR OPERATION

   (a) Apply 12V to terminals 2 and 3 and check that the mirror operates.
   Then, reverse the polarity, and check that the mirror revolution is reversed.

   (b) Apply 12V to terminals 3 and 4 and check that the mirror operates.
   Then, reverse the polarity, and check that the mirror revolution is reversed.

   If there is no mirror operation, replace the left mirror.

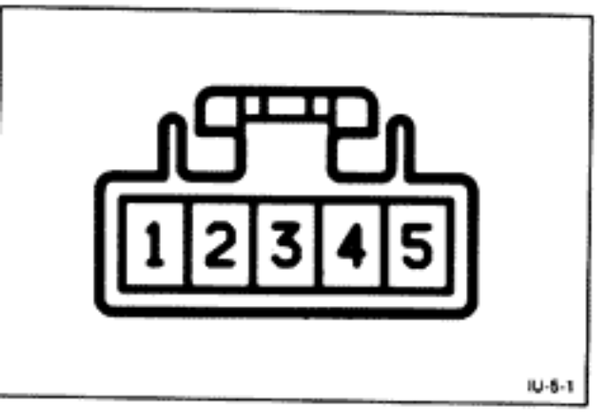

2. INSPECT RIGHT MIRROR OPERATION

   (a) Apply 12V to terminals 2 and 3 and check that the mirror operates.
   Then, reverse the polarity, and check that the mirror revolution is reversed.

   (b) Apply 12V to terminals 3 and 4 and check that the mirror operates.
   Then, reverse the polarity, and check that the mirror revolution is reversed.

   If there is no mirror operation, replace the right mirror.

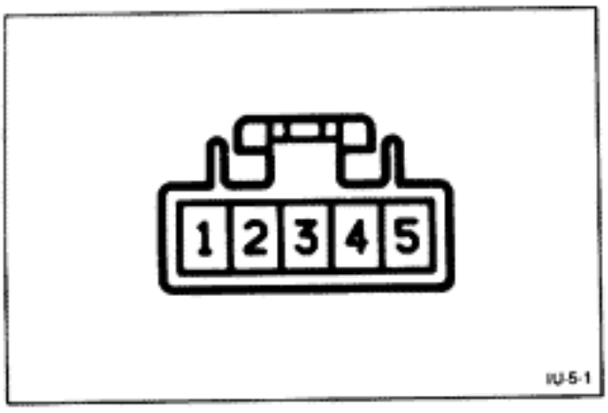

MIRROR HEATER

Mirror Heater

INSPECTION OF MIRROR HEATER

MEASURE MIRROR HEATER RESISTANCE

Measure the resistance between terminals 1 and 5.

Resistance: 5 – 30 Ω

If resistance value is not correct, replace the mirror.

NOTE: The resistance value is increased according to the rise of temperature.

THEFT DETERRENT SYSTEM

WIRING DIAGRAM

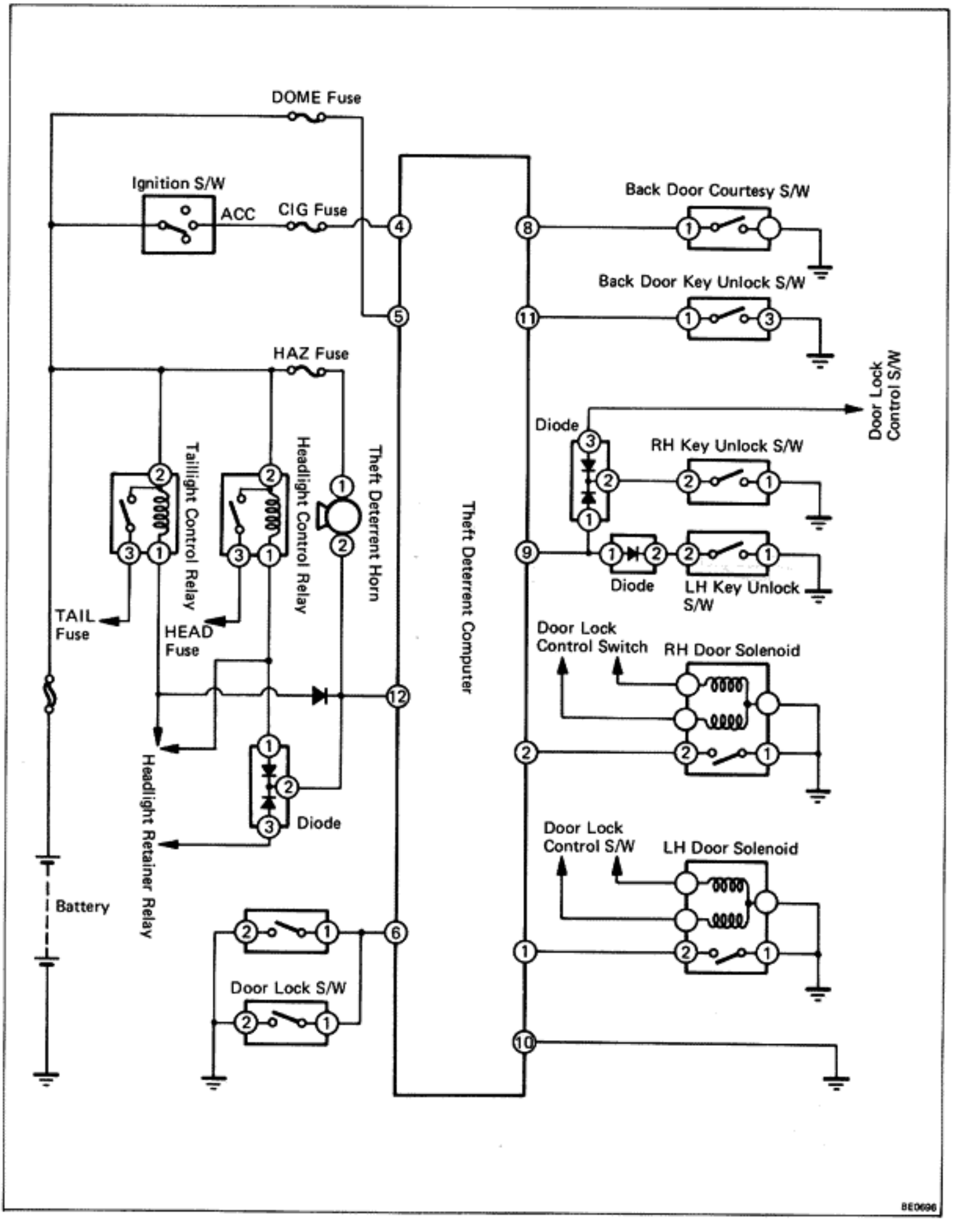

Connectors

Key Unlock Switch



Door Lock Solenoid



Door Lock Switch



Theft Deterrent Horn

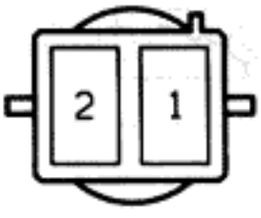

Headlight Control Relay
Taillight Control Relay

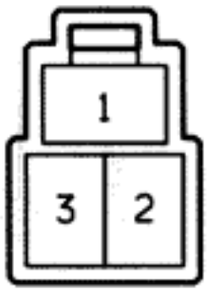

Back Door Courtesy Switch



Back Door Key Unlock Switch



Diode (For RH Key Unlock Switch and Horn)



Diode (For LH Key Unlock Switch and Taillight Control Relay)

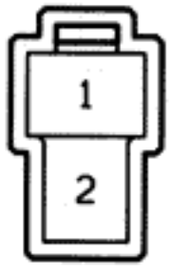

Theft Deterrent Computer

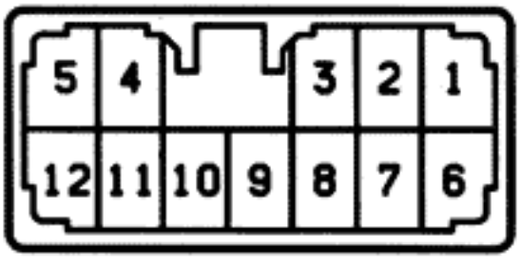

Troubleshooting

- Check that the operation of other systems (Door Lock Control, Open Door Warning ... etc.) are normal.
- When the system is not operating, lower the door glass and confirm under what conditions it does not operate, or malfunctions.

Problem	Section
Theft deterrent system can not be set.	A
Theft deterrent system does not operate when LH door opened.	B
Theft deterrent system does not operate when RH door opened.	C
Theft deterrent system does not cancel when ignition switch turned on or ACC position.	D
Theft deterrent system does not cancel when LH door unlocked with key.	E
Theft deterrent system does not cancel when RH door unlocked with key.	F
Horn does not blow even if theft deterrent system operated.	G
Headlights and taillights do not flash even if theft deterrent system operated.	H

A INSPECTION OF SOURCE CIRCUIT

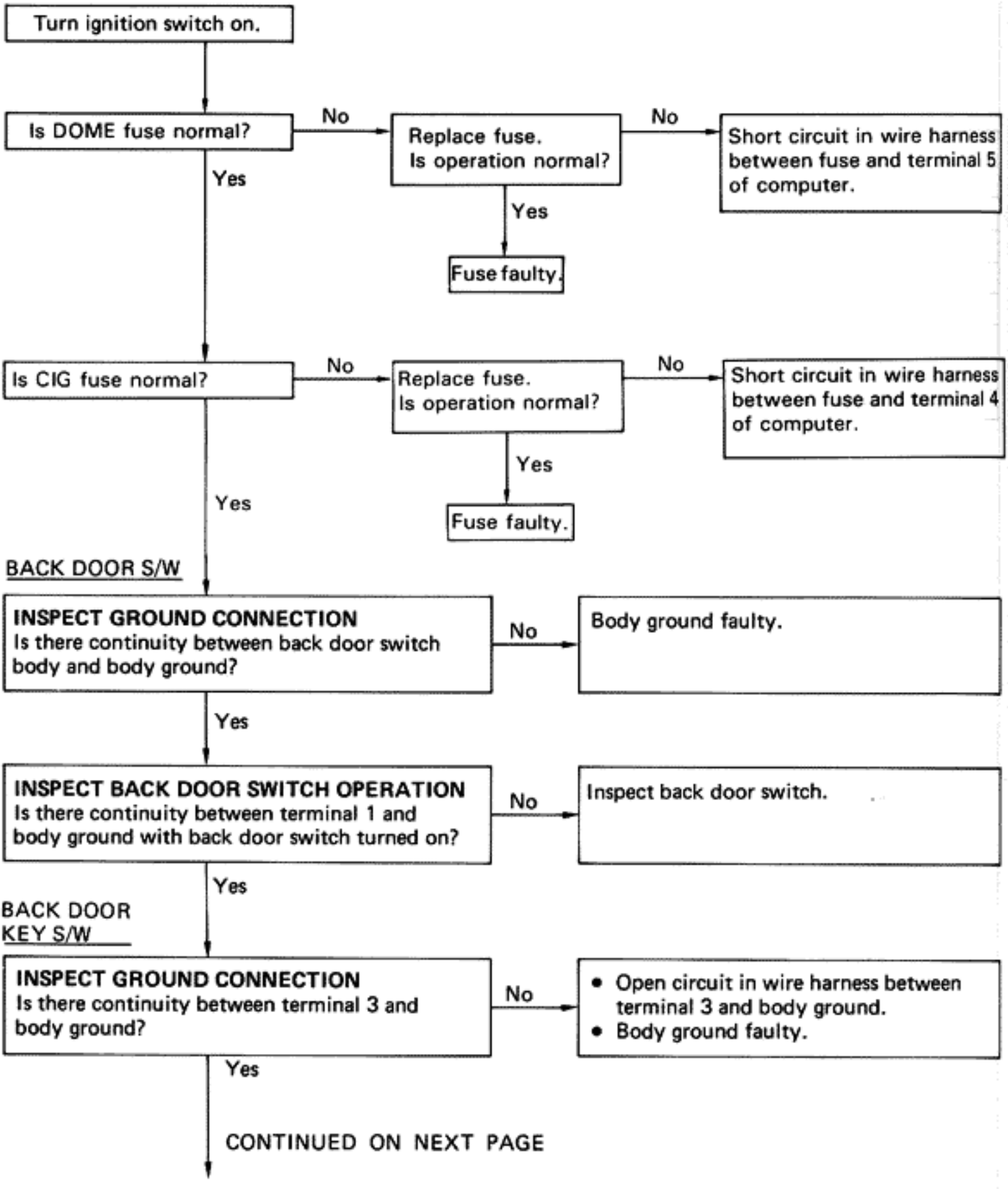

CONTINUED FROM PREVIOUS PAGE

INSPECT BACK DOOR KEY UNLOCK SWITCH OPERATION
Is there continuity between terminal 1 and body ground with back door key unlock switch turned on?

No → Inspect back door key unlock switch.

Yes

COMPUTER

Disconnect computer and inspect connector on wire harness side as follows.

INSPECT POWER SOURCE
Is there battery voltage between terminal 5 and body ground?

No → Open circuit in wire harness between fuse and terminal 5 of computer.

Yes

INSPECT GROUND CONNECTION
Is there continuity between terminal 10 and body ground?

No →
- Open circuit in wire harness between terminal 10 of computer and body ground.
- Body ground faulty.

Yes

INSPECT LH KEY UNLOCK SWITCH CIRCUIT
Is there continuity between terminal 9 and body ground with LH door locked with key?

Yes → Short circuit in wire harness between terminal 9 of computer and terminal 2 of LH key unlock switch.

No

INSPECT RH KEY UNLOCK SWITCH CIRCUIT
Is there continuity between terminal 9 and body ground with RH door locked with key?

Yes → Short circuit in wire harness between terminal 9 of computer and terminal 2 of RH key unlock switch.

No

CONTINUED ON NEXT PAGE

CONTINUED FROM PREVIOUS PAGE

INSPECT LH DOOR LOCK SOLENOID CIRCUIT
Disconnect connector from computer.
Is there continuity between terminal 1 of wire harness side connector and body ground with LH door unlocked?

No → Open circuit in wire harness between terminal 1 of computer and terminal 2 of door lock solenoid.

Yes ↓

INSPECT RH DOOR LOCK SOLENOID CIRCUIT
Disconnect connector from computer.
Is there continuity between terminal 2 of wire harness side connector and body ground with RH door unlocked?

No → Open circuit in wire harness between terminal 2 of computer and terminal 2 of door lock solenoid.

Yes ↓

INSPECT LH DOOR LOCK SWITCH CIRCUIT
Close LH Door.
Is there continuity between terminal 6 and body ground with LH door closed?

Yes → Short circuit in wire harness between terminal 6 of computer and terminal 2 of LH door lock switch.

No ↓

INSPECT RH DOOR LOCK SWITCH CIRCUIT
Close RH door.
Is there continuity between terminal 6 and body ground with RH door closed?

Yes → Short circuit in wire harness between terminal 6 of computer and terminal 2 of RH door lock switch.

No ↓

INSPECT HORN, TAILLIGHT AND HEAD-LIGHT CIRCUIT
Is there battery voltage between terminal 12 and body ground.

No → Open circuit in wire harness between terminal 12 of computer and horn or taillight control relay or headlight control relay.

Yes ↓

Replace computer.

B INSPECTION OF LH DOOR UNLOCK CIRCUIT

LH DOOR LOCK S/W

INSPECT DOOR LOCK SWITCH OPERATION
Is LH door lock switch normal ?
(See page BE-99)

No → Replace LH door lock switch.

Yes

COMPUTER

INSPECT DOOR LOCK SWITCH CIRCUIT
Disconnect connector from computer.
Is there continuity between terminal 6 of connector side and body ground with LH door closed ?

Yes → Short circuit in wire harness between terminal 6 of computer and terminal 1 of LH door lock switch.

No

Replace computer.

C INSPECTION OF RH DOOR UNLOCK CIRCUIT

RH DOOR LOCK S/W

INSPECT DOOR LOCK SWITCH OPERATION
Is RH door lock switch normal ?
(See page BE-99)

No → Replace RH door switch.

Yes

COMPUTER

INSPECT DOOR LOCK SWITCH CIRCUIT
Disconnect connector from computer.
Is there continuity between terminal 6 of connector side and body ground with RH door closed ?

Yes → Short circuit in wire harness between terminal 6 of computer and terminal 1 of RH door lock switch.

No

Replace computer.

D INSPECTION OF IGNITION SWITCH CIRCUIT

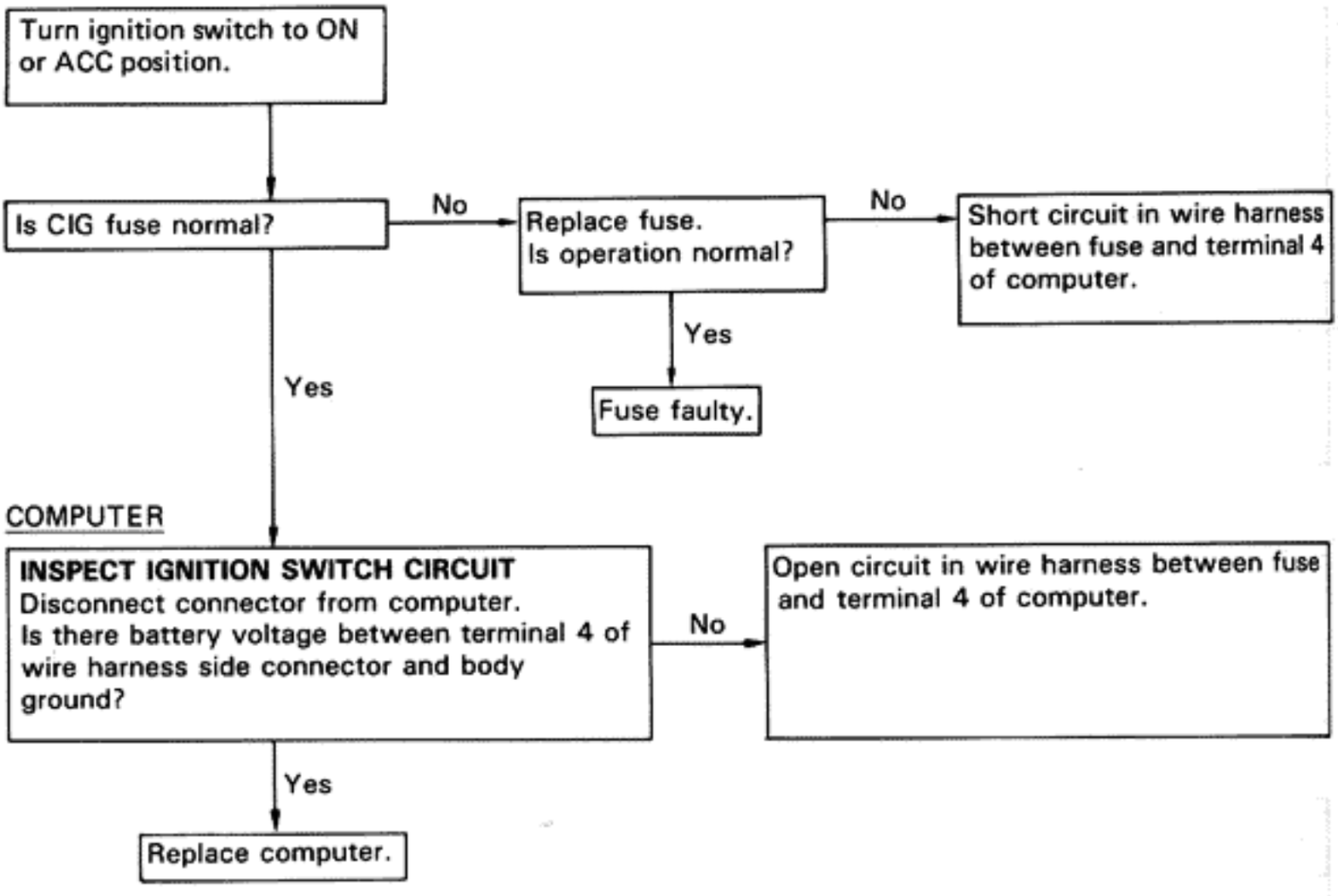

E INSPECTION OF LH KEY UNLOCK SWITCH CIRCUIT

Turn ignition switch off.

DIODE

INSPECT DIODE CONTINUITY
Is diode of key unlock switch normal ?
(See page BE-67)

No → Replace diode.

Yes

COMPUTER

INSPECT KEY UNLOCK SWITCH CIRCUIT
Is there continuity between terminal 9 and body ground with LH door opened with key ?

No → Open circuit in wire harness between terminal 9 of computer and terminal 1 of LH key unlock switch side diode.

Yes

Replace computer.

F INSPECTION OF RH KEY UNLOCK SWITCH CIRCUIT

Turn ignition switch off.

DIODE

INSPECT DIODE CONTINUITY
Is diode of key unlock switch normal ?
(See page BE-67)

No → Replace diode.

Yes

COMPUTER

INSPECT KEY UNLOCK SWITCH CIRCUIT
Is there continuity between terminal 9 and body ground with RH door opened with key ?

No → Open circuit in wire harness between terminal 9 of computer and terminal 1 of RH key unlock switch side diode.

Yes

Replace computer.

G INSPECTION OF THEFT DETERRENT HORN CIRCUIT

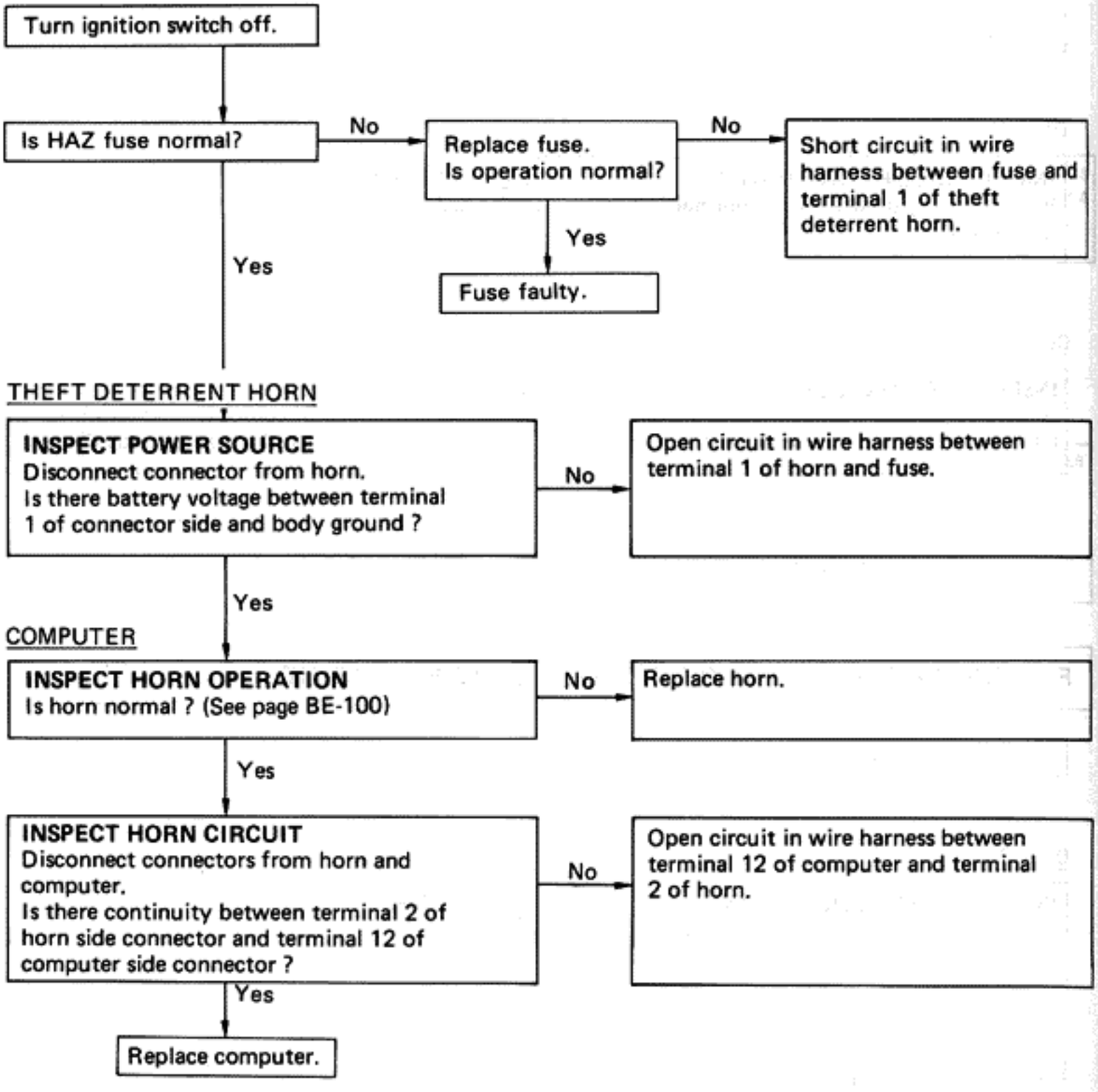

H INSPECTION OF LIGHT CONTROL RELAY CIRCUIT

Turn ignition switch off.

DIODE

INSPECT DIODE CONTINUITY
Is diode of headlight control relay side and/or taillight control relay side normal ? (See page BE-14)

No → Replace diode.

Yes

COMPUTER

Disconnect computer and inspect connector on wire harness side as follows.

INSPECT HEADLIGHT CONTROL RELAY CIRCUIT
Disconnect taillight control relay and theft deterrent horn.
Is there battery voltage between terminal 12 and body ground?

No → Open or short circuit in wire harness between terminal 12 of computer and terminal 1 of headlight control relay.

Yes

INSPECT TAILLIGHT CONTROL RELAY CIRCUIT
Disconnect headlight control relay and theft deterrent horn.
Is there battery voltage between terminal 12 and body ground?

No → Open or short circuit in wire harness between terminal 12 of computer and terminal 1 of taillight control relay.

Yes

Replace computer.

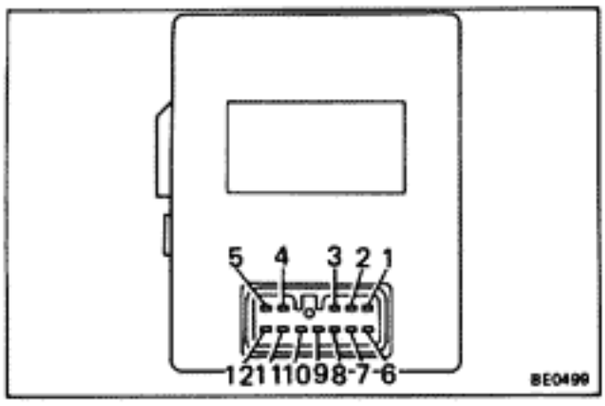

Theft Deterrent Computer

INSPECTION OF THEFT DETERRENT COMPUTER

INSPECT THEFT DETERRENT COMPUTER CIRCUIT

Disconnect the computer and inspect the connector on the wire harness side as shown in the chart below.

Terminal	Check Item	Tester Connection	Condition	Voltage or Continuity
1	Continuity	1–Body Ground	F_L door lock knob unlocked	Continuity
			F_L door lock knob locked	No continuity
2	Continuity	2–Body Ground	F_R door lock knob unlocked	Continuity
			F_R door lock knob locked	No continuity
4	Voltage	4–Body Ground	Turn ignition switch to ON or ACC	Battery voltage
			Turn ignition switch off	No voltage
5	Voltage	5–Body Ground	–	Battery voltage
6	Continuity	6–Body Ground	F_L or F_R door opened	Continuity
			F_L and F_R door closed	No continuity
8	Continuity	8–Body Ground	Back door opened	Continuity
			Back door closed	No continuity
9	Continuity	9–Body Ground	F_L or F_R door unlocked with key	Continuity
			F_L and F_R door locked with key	No continuity
10	Continuity	10–Body Ground	–	Continuity
11	Continuity	11–Body Ground	Back door unlocked with key	Continuity
			Back door locked	No continuity
12	Voltage	12–Body Ground	–	Battery voltage

If circuit is correct, replace the theft deterrent computer.

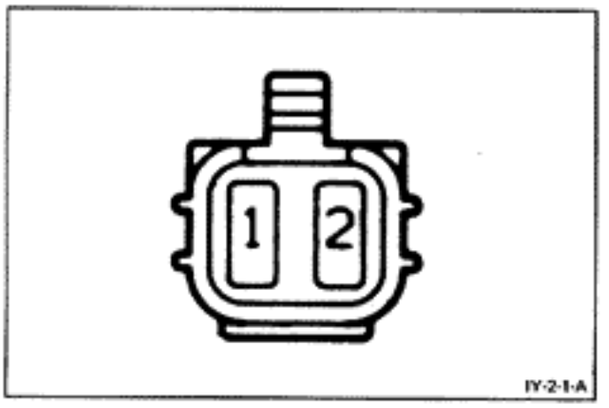

Door Lock Switch

INSPECTION OF DOOR LOCK SWITCH

INSPECT SWITCH OPERATION

(a) Check that there is continuity between terminals with the door closed.

(b) Check that there is no continuity between terminals with the door opened.

If operation is not as specified, replace the switch.

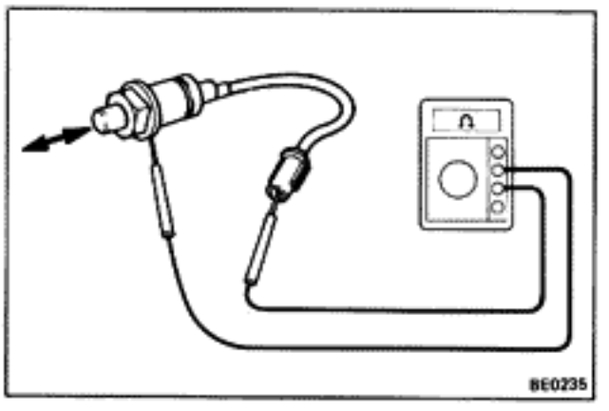

Back Door Courtesy Switch

INSPECTION OF BACK DOOR COURTESY SWITCH

INSPECT SWITCH OPERATION

(a) Check that there is continuity between terminal and body ground when the switch is free.

(b) Check that there is no continuity between terminal and body ground when the switch pin is pushed.

If operation is not as specified, replace the switch.

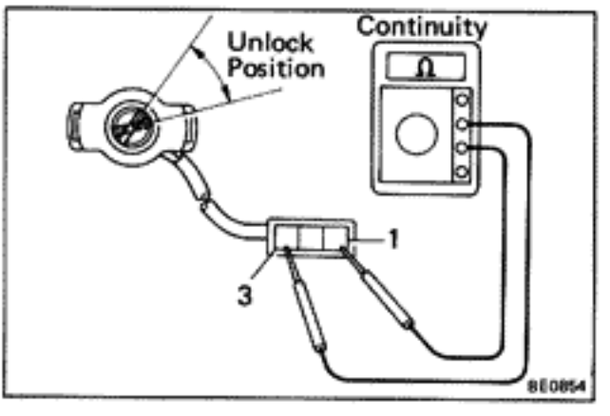

Back Door Key Unlock Switch

INSPECTION OF BACK DOOR KEY UNLOCK SWITCH

INSPECT SWITCH CONTINUITY

(a) Check that there is continuity between terminals 1 and 3 with the switch is unlock position.

(b) Check that there is no continuity between terminals 1 and 3 with the switch is except unlock position.

If continuity is not as specified, replace the switch.

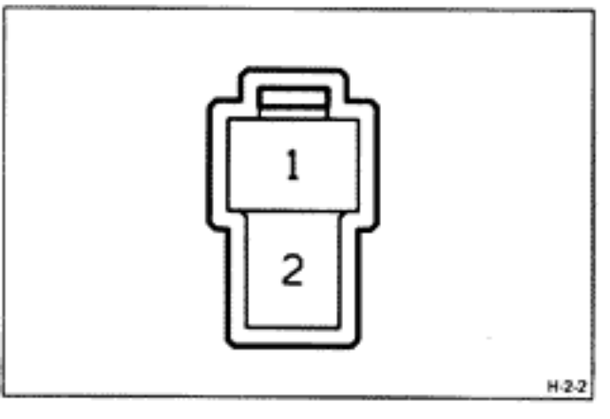

Diode (For LH Key Unlock Switch and Taillight Control Relay)

INSPECTION OF DIODE

INSPECT DIODE CONTINUITY

Connect the test leads of the ohmmeter to terminals 1 and 2, and check for continuity. Next reverse the test leads and check, again, for continuity.

If both of the test results are same condition, replace the diode.

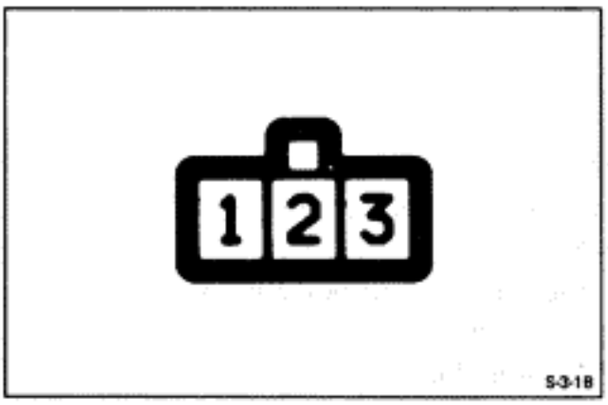

Diode (For RH Key Unlock Switch and Horn)

INSPECTION OF DIODE

INSPECT DIODE CONTINUITY

(a) Connect the test leads of the ohmmeter to terminals 1 and 2, and check for continuity. Next, reverse the test leads and check, again, for continuity.

If both of the test results are same condition, replace the diode.

(b) Connect the test leads of the ohmmeter to terminals 2 and 3, and check for continuity. Next, reverse the the test leads and check, again, for continuity.

If both of the test results are same condition, replace the diode.

Headlight Control Relay

(See page BE-14)

Taillight Control Relay

(See page BE-14)

Key Unlock Switch

(See page BE-67)

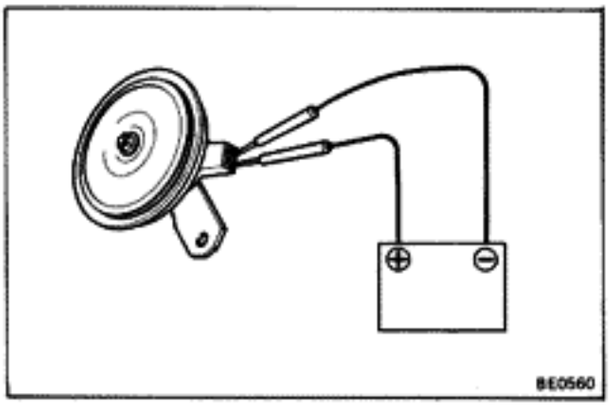

Theft Deterrent Horn

INSPECTION OF THEFT DETERRENT HORN

INSPECT HORN OPERATION

Connect the positive (+) lead from the battery to terminal 1. Connect the negative (–) lead to terminal 2.
Check that the horn blows.

If operation is not as specified, replace the horn.

Door Lock Solenoid

(See page BE-68)

RADIO, STEREO TAPE PLAYER AND ANTENNA

Troubleshooting

DESCRIPTION SYMBOLS

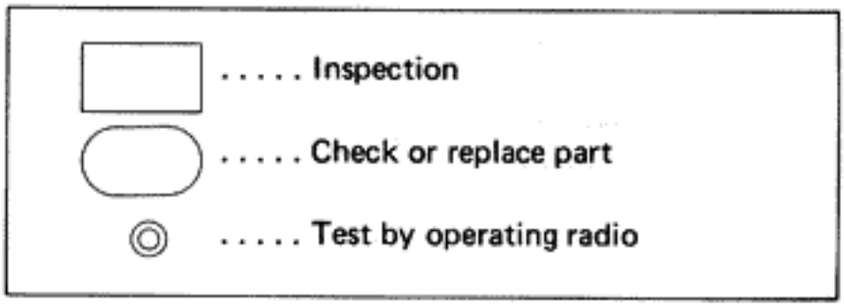

1. DEAD RADIO AND TAPE PLAYER

(a) No power to radio or tape player, or power but no sound.

Possible causes:

- Blown RADIO fuse
- Short circuit or broken wire in power source wire harness
- Loose connectors behind radio and tape player
- Loose speaker connector
- Defective speaker
- Broken wire in speaker wire harness
- Improperly installed radio or tape player
- Defective radio or tape player

TEST 1

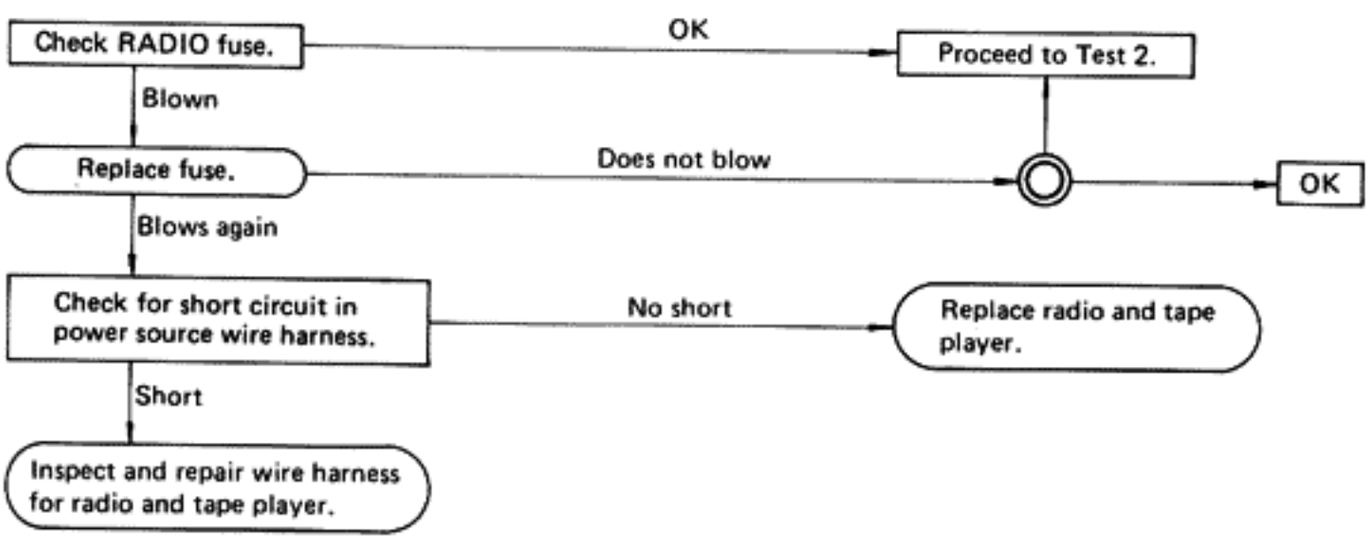

TEST 2

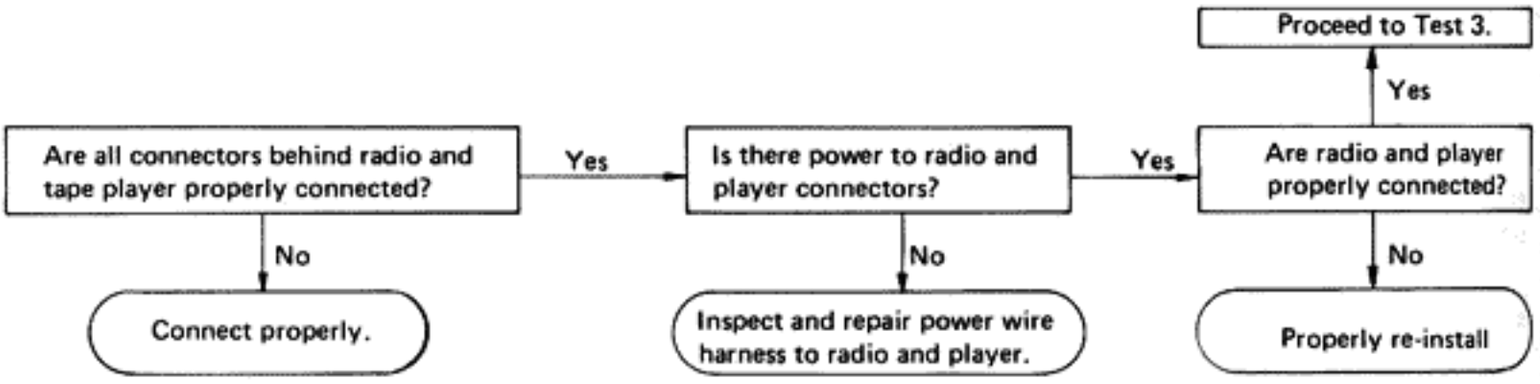
Are all connectors behind radio and tape player properly connected?
Yes
Is there power to radio and player connectors?
Yes
Are radio and player properly connected?
Yes
Proceed to Test 3.
No
Connect properly.
No
Inspect and repair power wire harness to radio and player.
No
Properly re-install

TEST 3

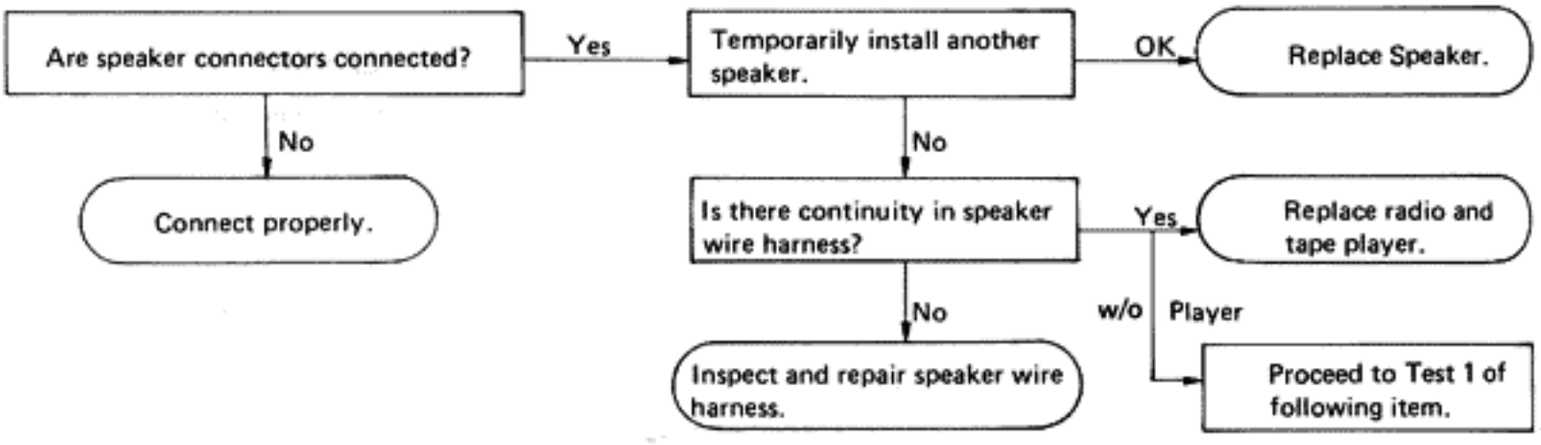
Are speaker connectors connected?
Yes
Temporarily install another speaker.
OK
Replace Speaker.
No
Connect properly.
No
Is there continuity in speaker wire harness?
Yes
Replace radio and tape player.
No
Inspect and repair speaker wire harness.
w/o Player
Proceed to Test 1 of following item.

(b) Tape player okay but no sound from AM and FM or either one.

Possible causes:

- Antenna disconnected
- Antenna plug not properly connected
- Defective antenna
- Defective antenna booster
- Defective antenna cable
- Defective radio or tape player
- Blown HAZ-HORN fuse
- Short circuit or broken wire in wire harness for back-up power source

TEST 1

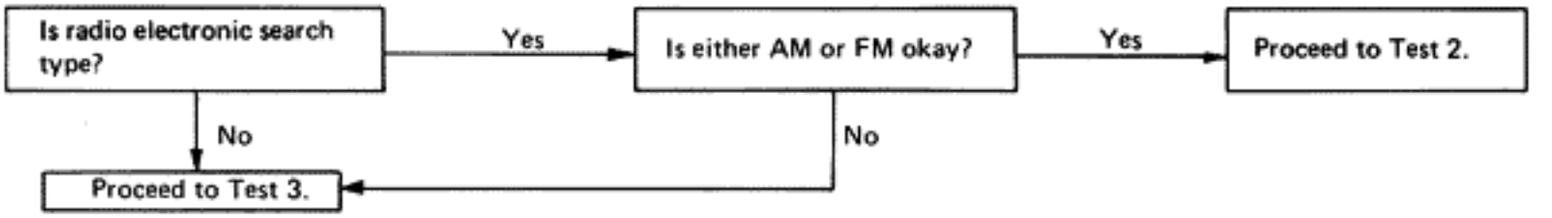

TEST 2

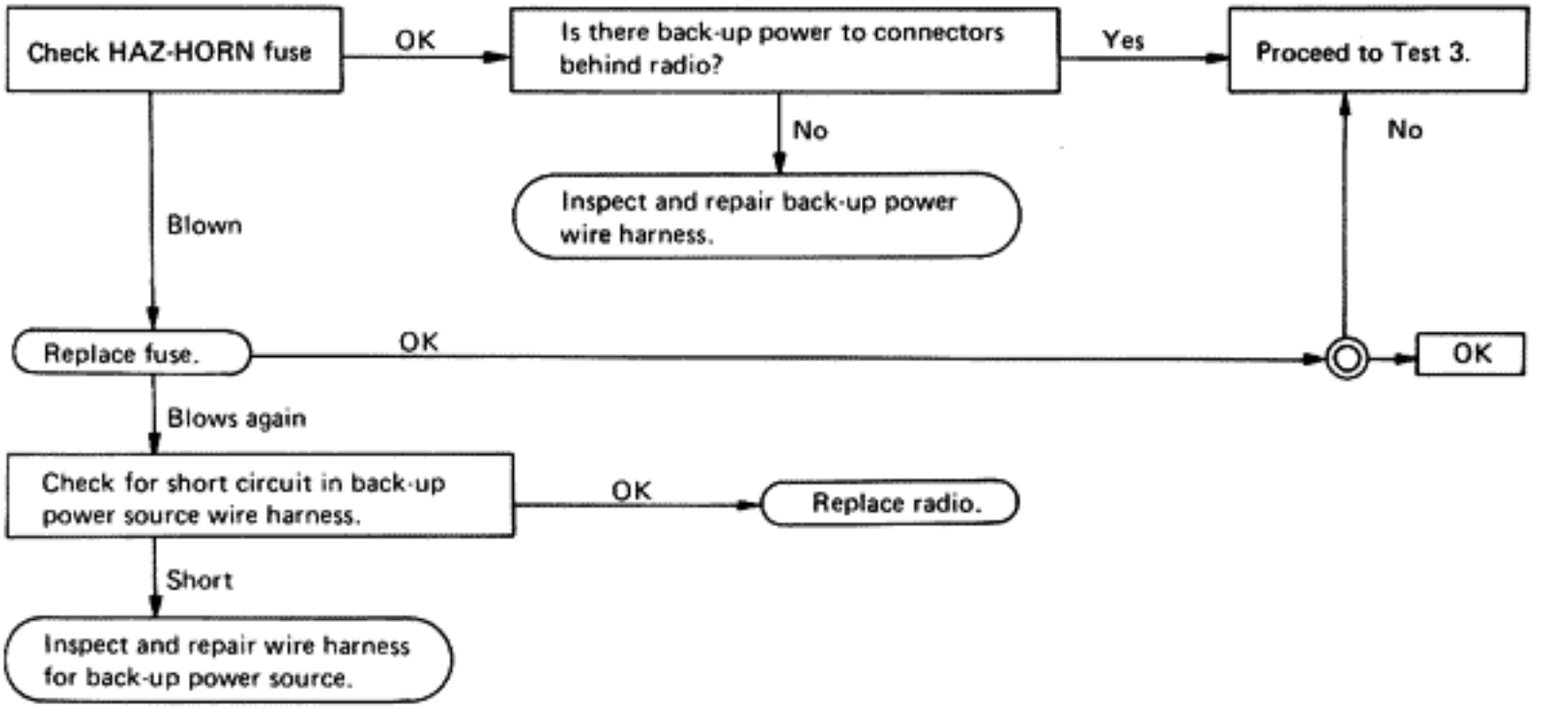

NOTE: Back-up power refers to the storage voltage for preset tuning. This is applied even when the ignition switch is OFF.

TEST 3

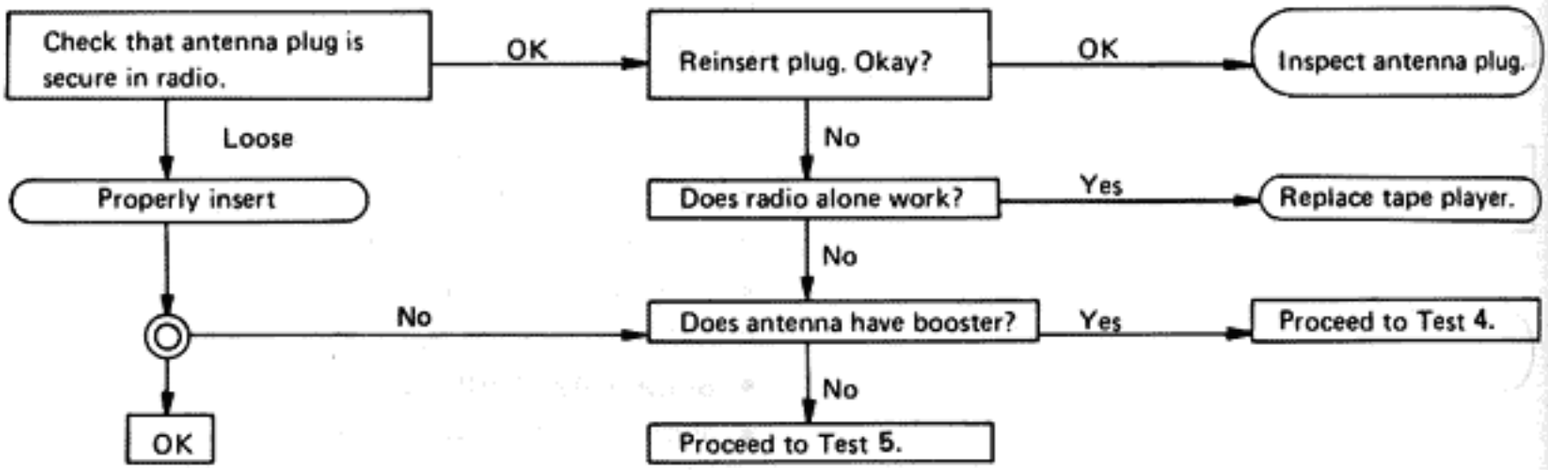

TEST 4

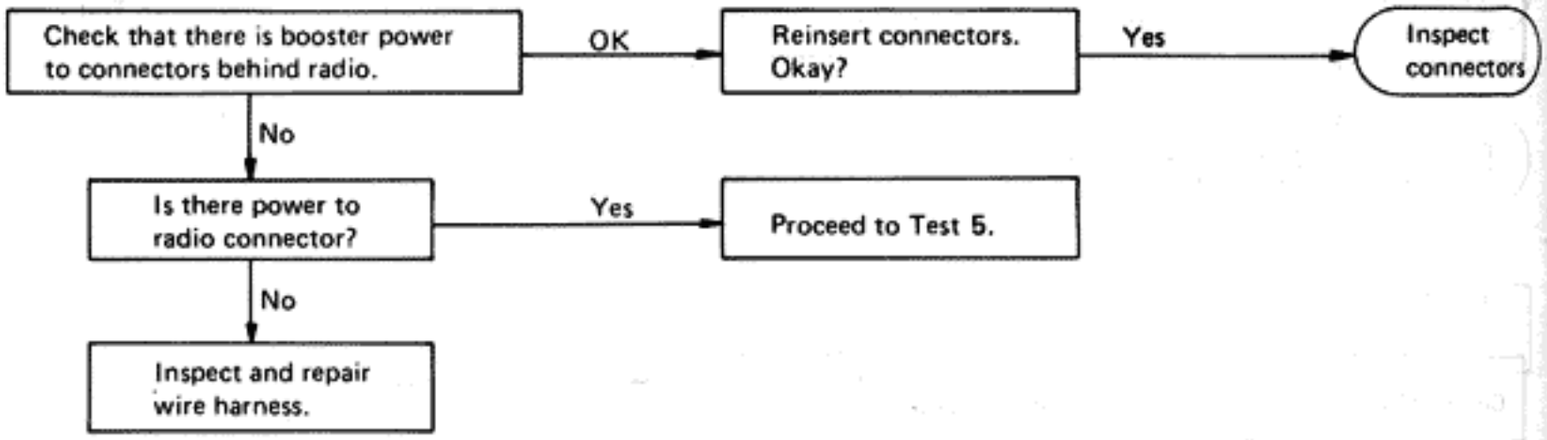

TEST 5

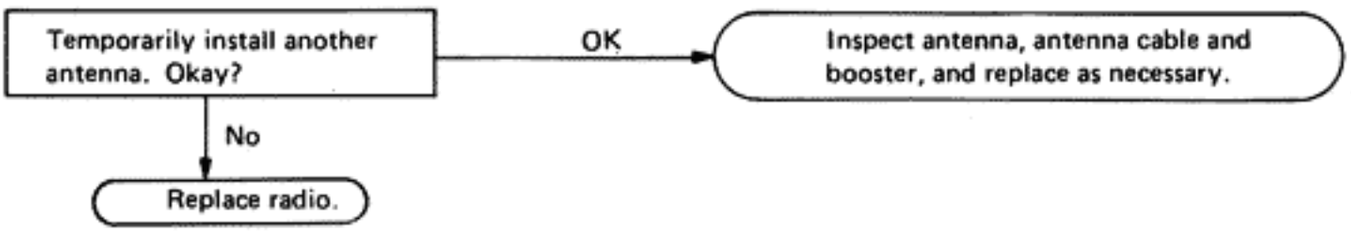

(c) No sound from one speaker.

Possible causes:

- Loose speaker connector
- Broken wire in speaker wire harness
- Defective speaker
- Defective radio and tape player

TEST 1

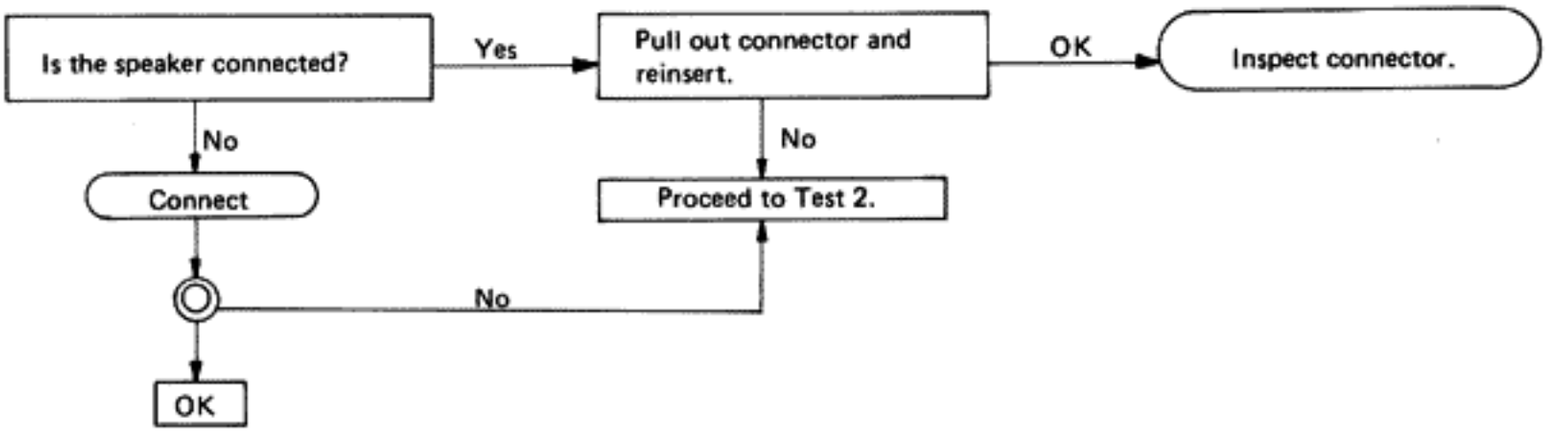

TEST 2

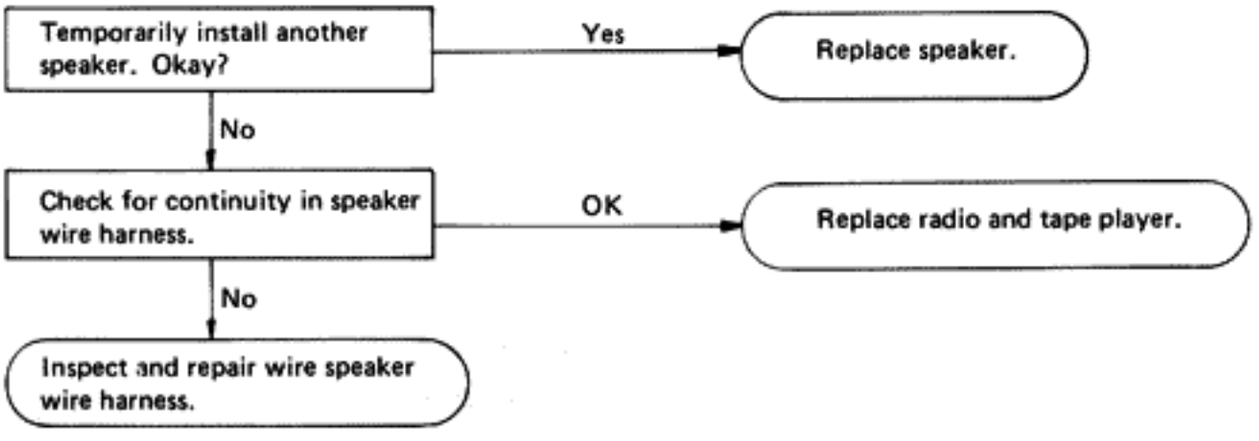

2. FAINT RECEPTION

Possible causes:

- Incorrectly adjusted antenna trimmer
- Defective antenna, cable or booster
- Defective speaker
- Defective radio

TEST

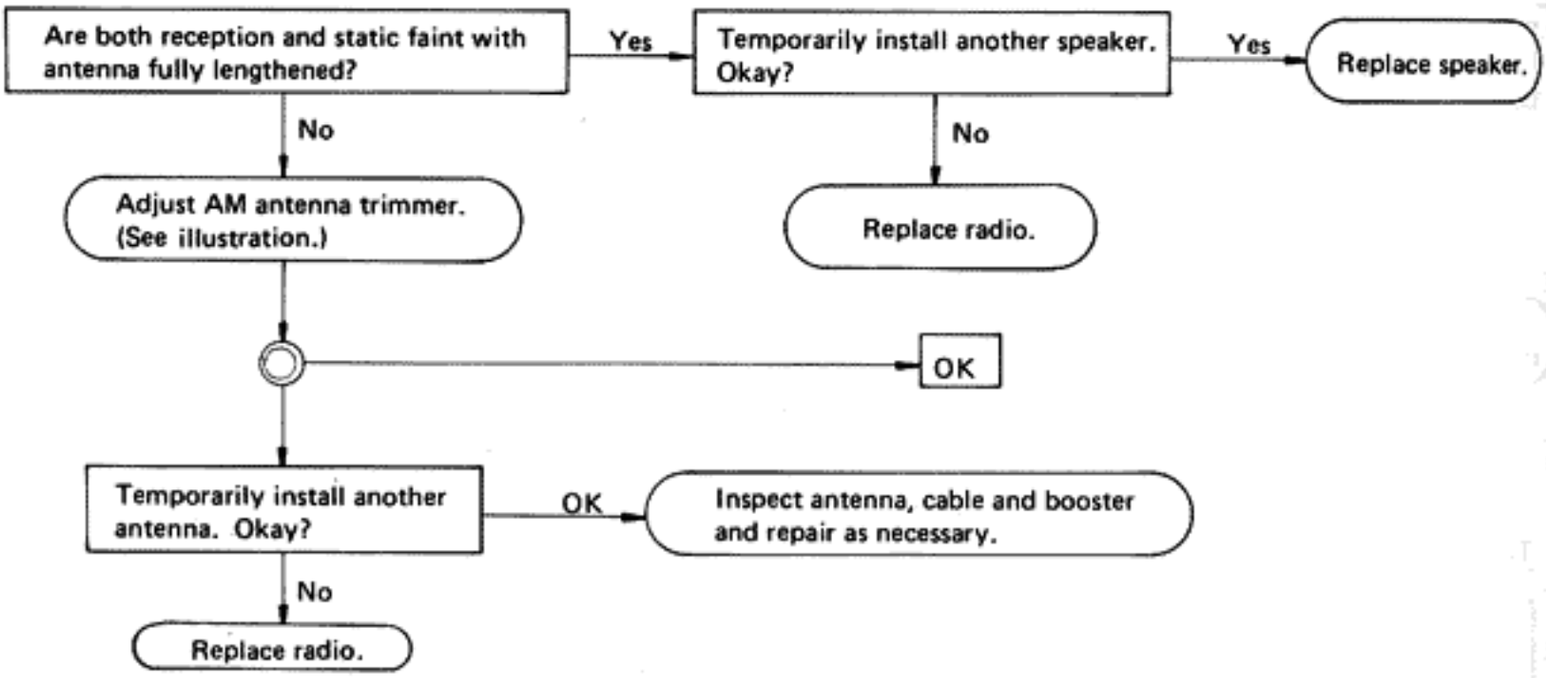

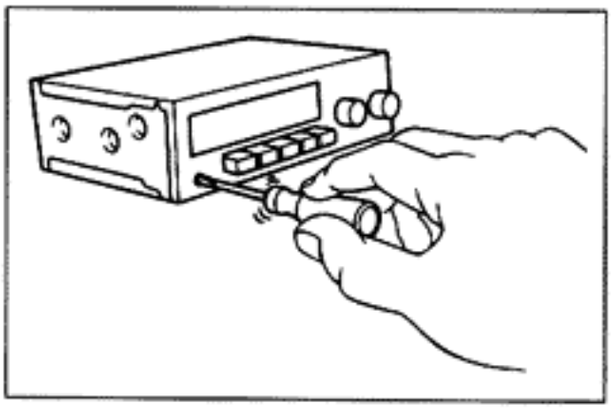

(Ex. Electronic search type)

NOTE: Adjustment of antenna trimmer.

(1) Fully lengthen the antenna.

(2) With the volume and tone at maximum, turn the dial to around 1,400 kHz where there is no reception.

(3) Adjust the trimmer to where static is loudest.

3. BAD SOUND QUALITY

(a) Sound quality bad when radio played.

Possible causes:

- Multipath interference of excessive interception
- Tuner dial not synchronized with station
- Defective antenna, cable or booster
- Speaker improperly installed
- Vibration sound from components near speaker
- Defective speaker
- Defective radio

TEST 1

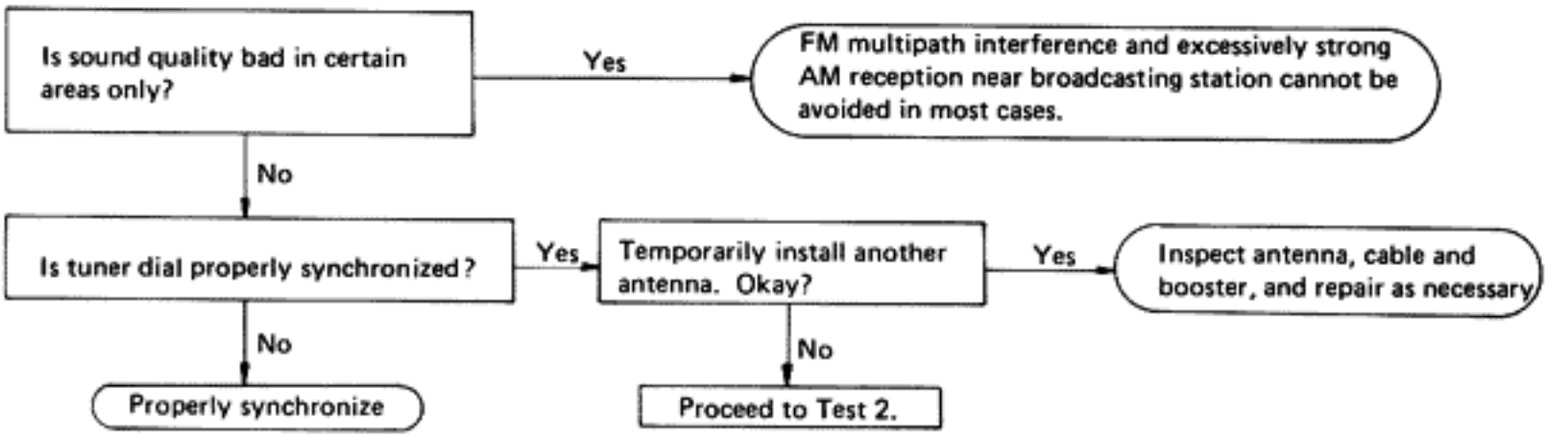

TEST 2

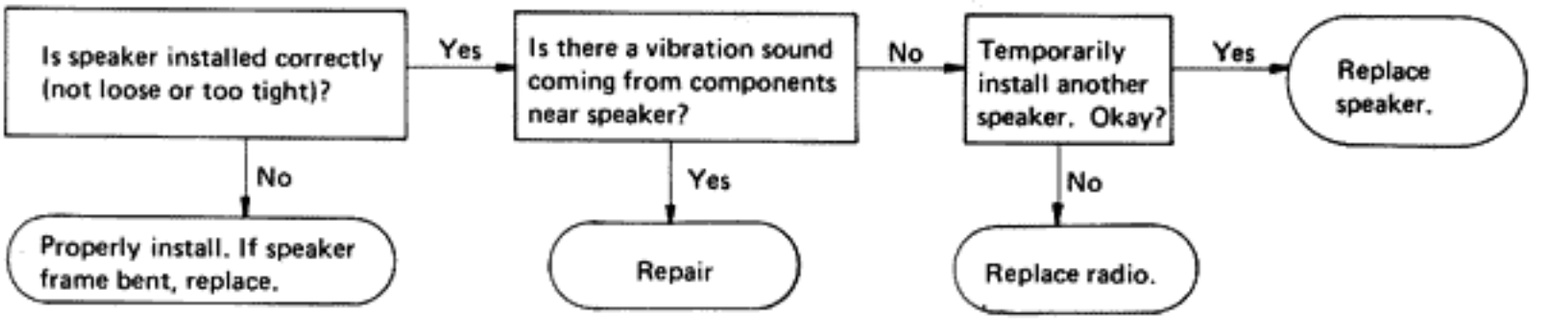

NOTE: FM distortion tends to increase sharply if the tuner is not synchronized.

(b) Sound quality bad when tape player played.

Possible causes:

- Bad tape
- Dirty head
- Incorrectly installed speaker
- Vibration noise from around speaker
- Defective speaker
- Defective tape player

TEST 1

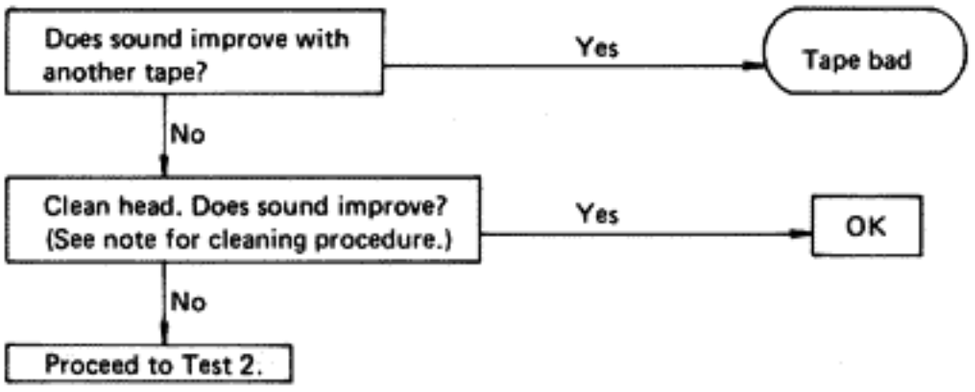

TEST 2

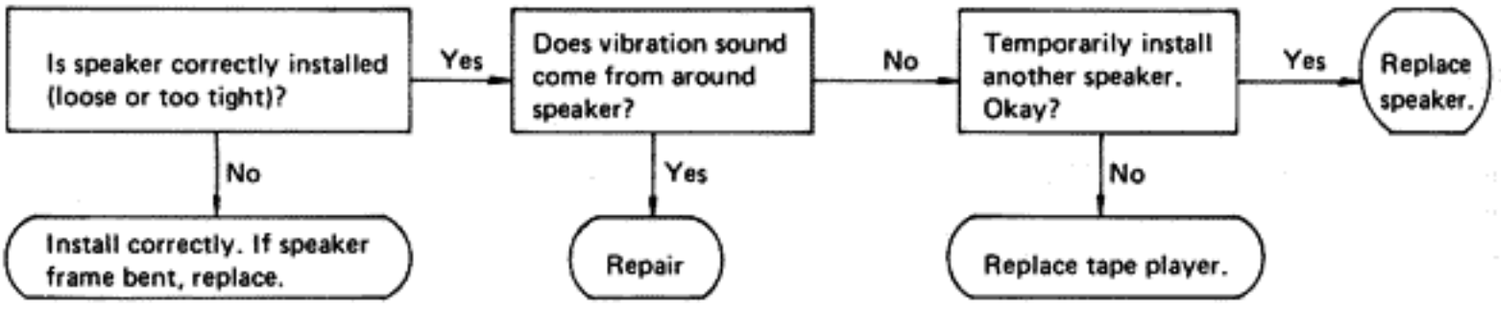

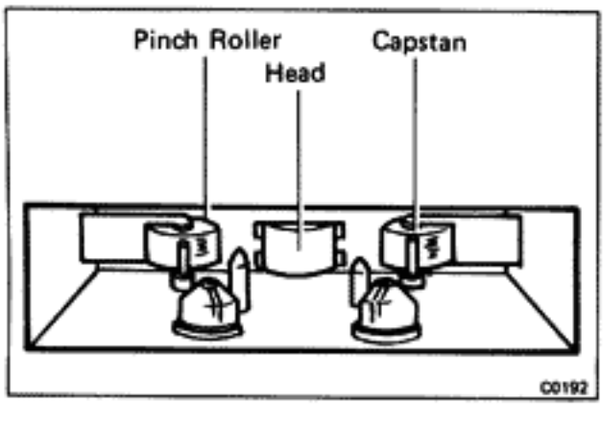

NOTE: Head cleaning procedure.

(1) Raise the cassette door with four finger. Next, using a pencil or like object, push in the guide.

(2) Using a cleaning pen or cotton applicator soaked in alcohol, clean the head surface, pinch rollers and capstans.

(3) Push in the eject button.

4. DEFECTIVE AUTO-SEARCH MECHANISM

Manual search possible but automatic search mechanism does not function or does not stop at all receivable stations.

Possible causes:

- Poor search sensitivity (SENS button)
- Defective radio

TEST

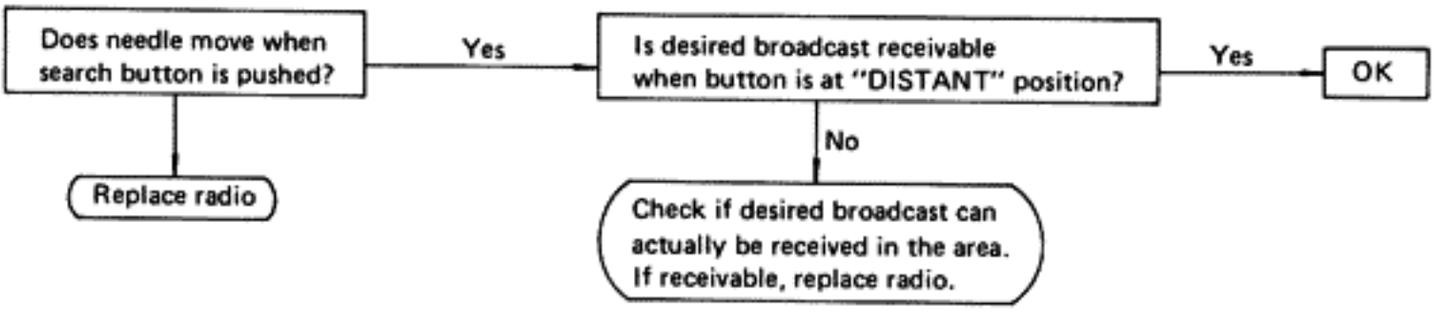

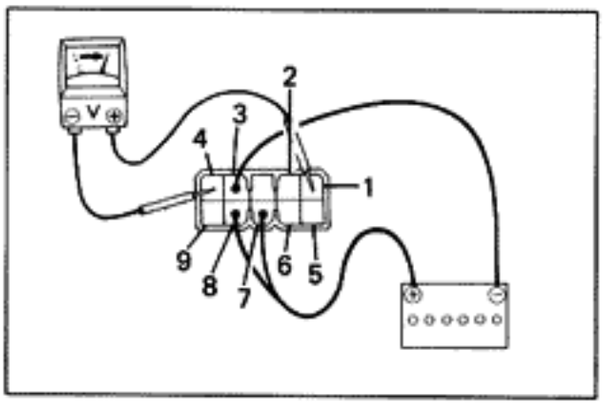

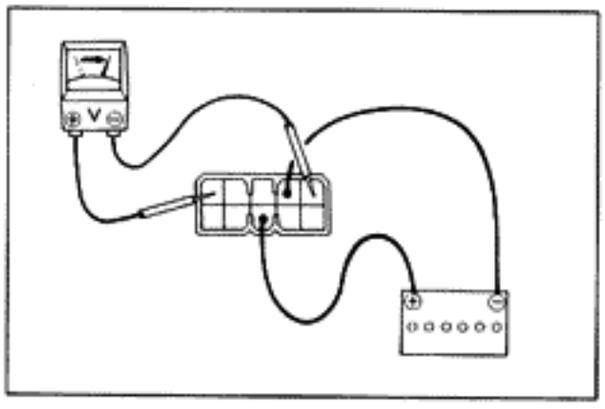

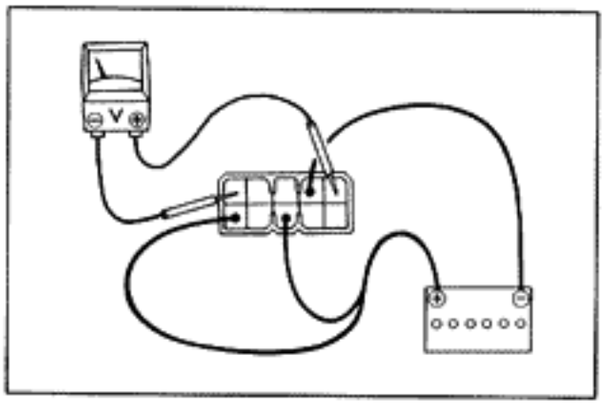

Antenna Motor Control Relay

INSPECTION OF ANTENNA MOTOR CONTROL RELAY

1. INSPECT RELAY OPERATION (ANTENNA UP)

(a) Connect the voltmeter positive (+) lead to terminal 1 and the negative (–) lead to terminal 4.

(b) Connect the positive (+) lead from the battery to terminals 7 and 8. Connect the negative (–) lead to terminal 3.

(c) Check that there is battery voltage.

2. INSPECT RELAY OPERATION (ANTENNA DOWN)

(a) Connect the voltmeter positive (+) lead to terminal 4 and the negative (–) lead to terminal 1.

(b) Connect the positive (+) lead from the battery to terminal 7. Connect the negative (–) lead to terminal 2.

(c) Check that there is battery voltage.

3. INSPECT RELAY OPERATION (ANTENNA STOP)

(a) Connect the voltmeter positive (+) lead to terminal 1 and the negative (–) lead to terminal 4.

(b) Connect the positive (+) lead from the battery to terminals 7 and 9. Connect the negative (–) lead to terminal 2.

(c) Check that there is no battery voltage.

If operation is not as specified, replace the relay.

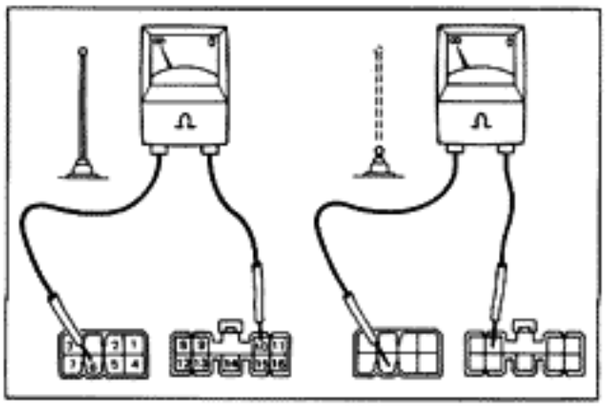

Antenna Motor

INSPECTION OF ANTENNA MOTOR

INSPECT LIMIT SWITCH OPERATION

(a) If the motor stops with the antenna up, check that there is no continuity between terminals 6 and 10.

(b) If the motor stops with the antenna down, check that there is no continuity between terminals 6 and 9.

CLOCK

Troubleshooting

CLOCK WILL NOT OPERATE

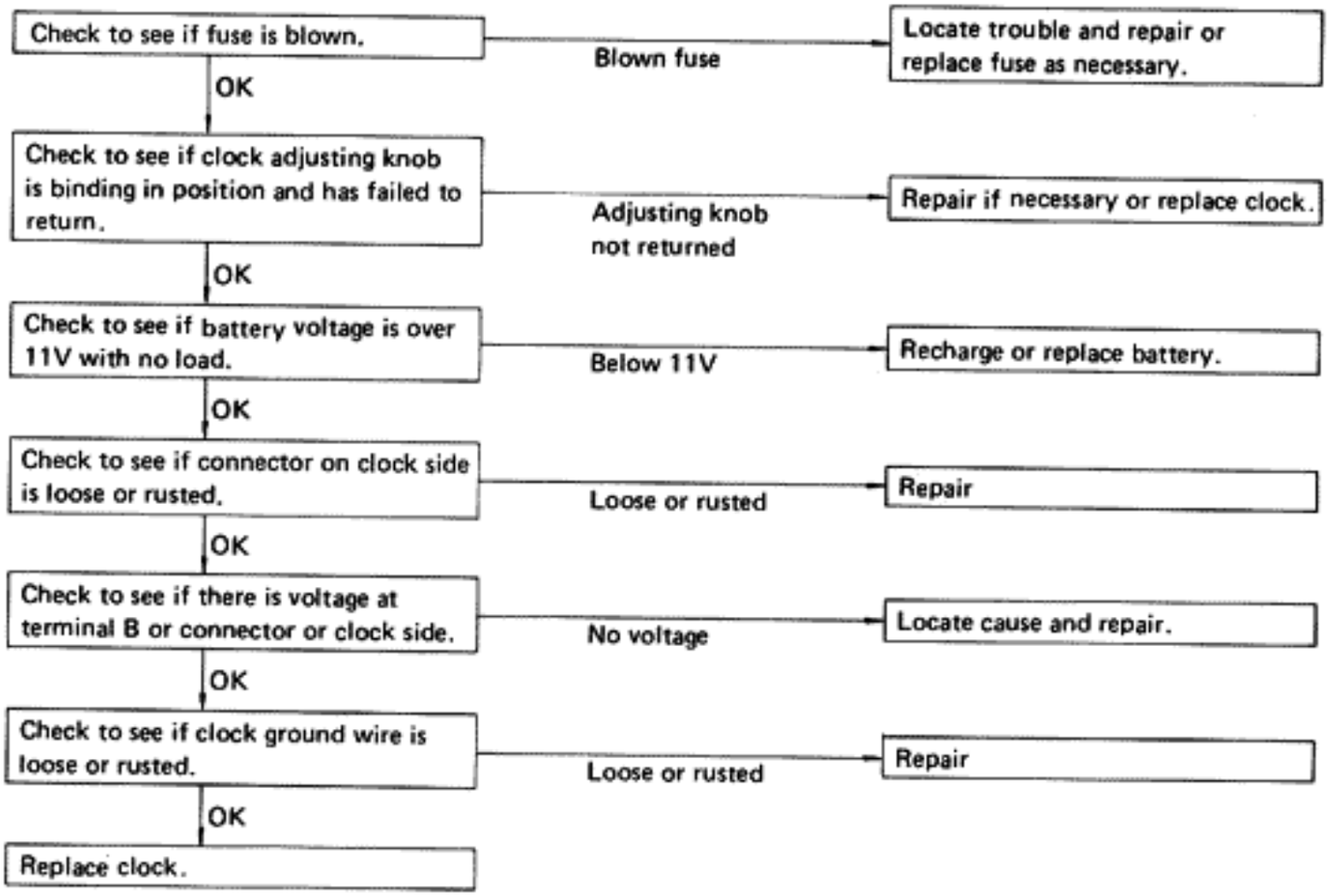

CLOCK LOSES OR GAINS TIME

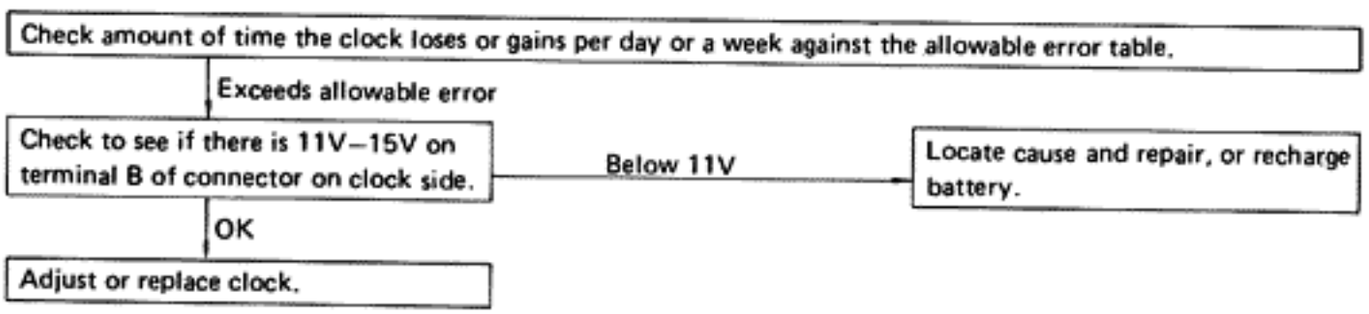

1. INSPECT ALLOWABLE ERROR OF CLOCK

Type	Allowable Error (per day)
3-hand quartz	±4.0 seconds
Digital quartz	±2.5 seconds

2. ADJUSTMENT OF CLOCK

Adjustment of the quartz clock requires a precise digital counter. Adjustment must be made in a shop specified by the manufacturer.

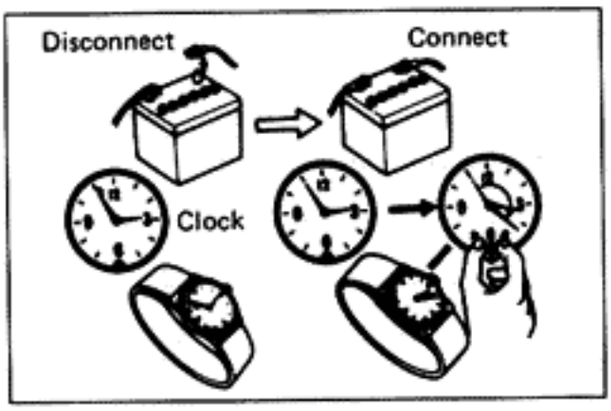

3. STARTING OF CLOCK

(a) Connect the battery terminal.

(b) Check the clock to see that it is running, and then set it to the correct time.

NOTE: Whenever the battery terminal is disconnected, make sure to set the clock to the correct time after reconnecting it.

TRIP COMPUTER

PRECAUTIONS

1. Before beginning troubleshooting, check that the trip computer operation is correct.
2. First check the wiring connector lines (See page BE-112) and confirm that the input source is normal.
3. When checking voltage, resistance, etc., use a high-impedance type tester (it is impossible with a simple tester).
4. Do not attempt to disassemble or repair individual components.
5. Do not attempt to make checks with an external power (battery, etc.) applied directly to the component.
6. In the flow chart, there is a high probability that the replacement part will solve the problem, although it is not 100% guaranteed.
7. Do not touch circuit components as there is danger of circuit damage due to static electricity. Never reverse battery connections as it could result in instant damage to the interior of the components.
8. Do not disconnect the battery while the engine is running as this would cause an instant reverse charge (100V), resulting in damage to the interior of the components.
9. Always disconnect the battery terminals before pulling apart connectors or terminals.
10. To prevent damage, handle meters with care.

WIRING DIAGRAM

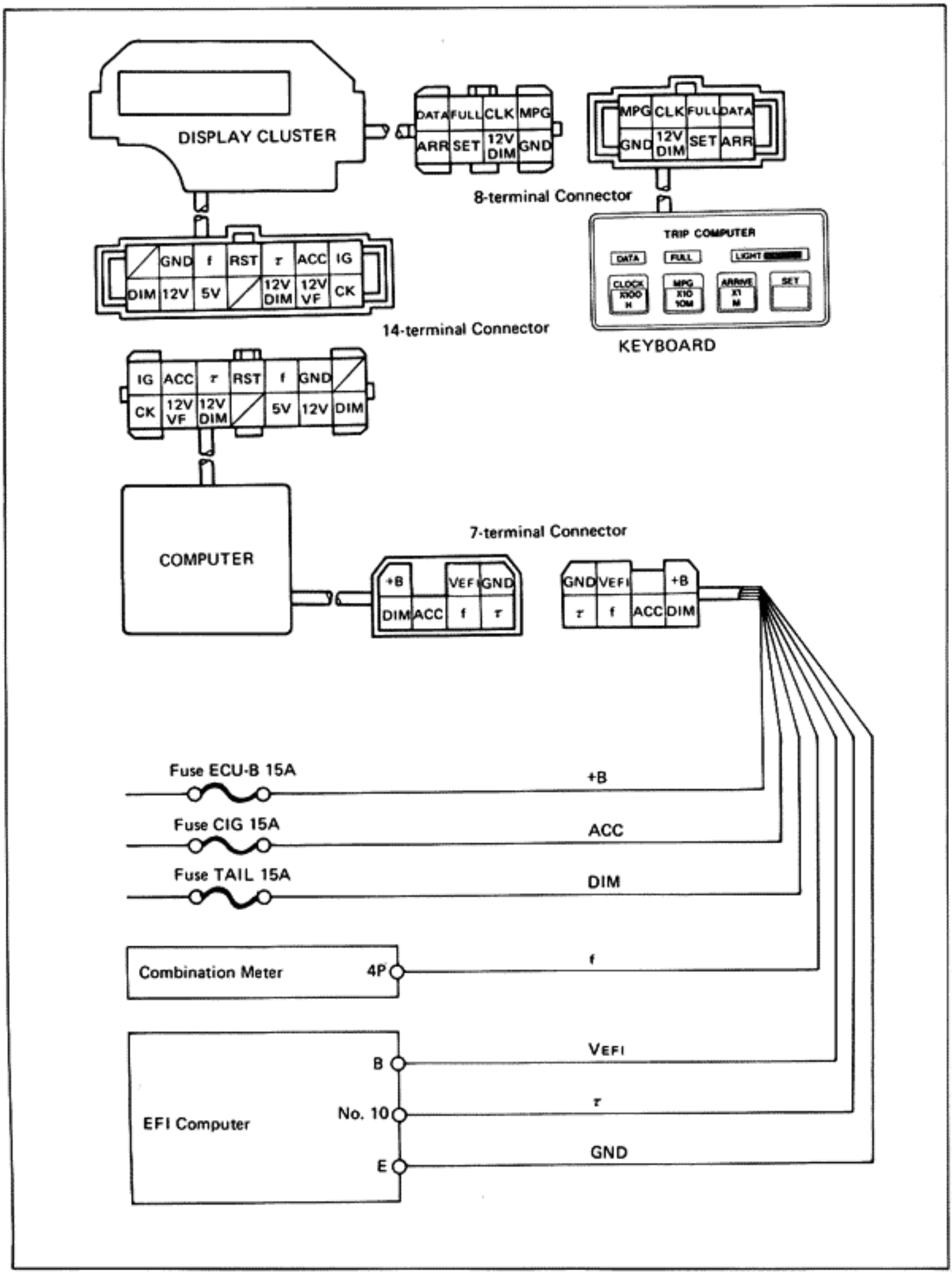

Troubleshooting

Check the following before beginning Troubleshooting.

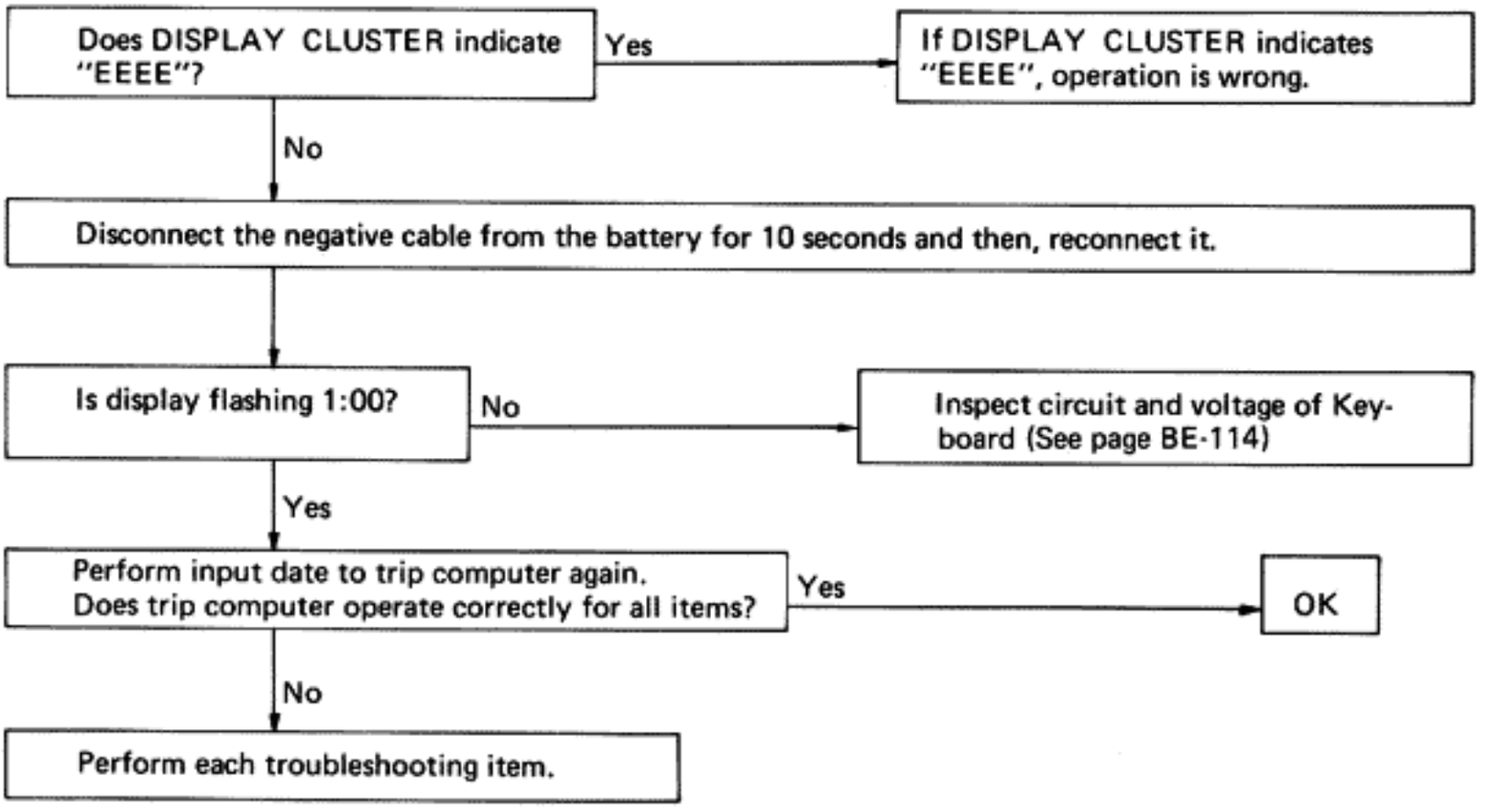

Symptom	Possible Cause	Trouble
Function keys do not operate.	DISPLAY CLUSTER or Keyboard	A
MPG display is always zero. Trip reading does increase or "ARRIVE" mode indicate " - - - - - - - " always.	DISPLAY CLUSTER or Keyboard	B
MPG display is always 70 or trip reading does not change.	DISPLAY CLUSTER or Keyboard	C
Lights does not dim.	DISPLAY CLUSTER or Keyboard	D
Inaccurate clock.	DISPLAY CLUSTER	E

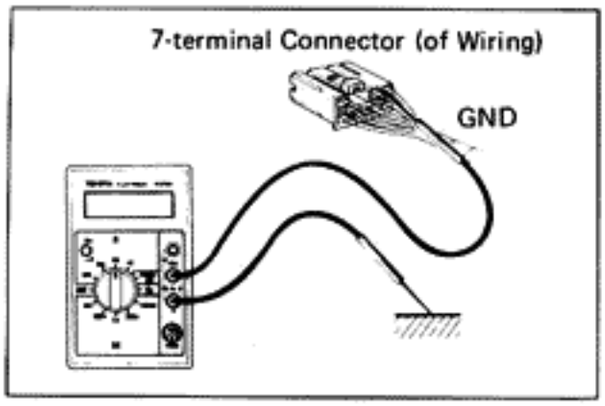

INSPECTION OF WIRING CONNECTOR LINE

1. INSPECT GROUND CONNECTION

Inspect the ground connection between terminal E and body ground of the wiring connector.

If there is no voltage repair or replace the ECV fuse, connector and wire harness.

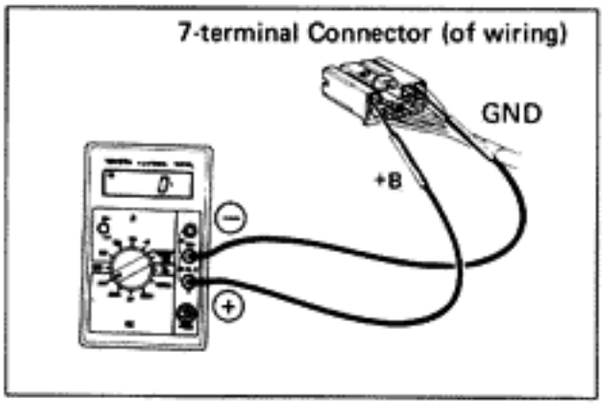

2. INSPECT POWER SOURCE LINE TO CONNECTOR

(a) Inspect the battery voltage between terminals +B and GND of the wiring connector.

If there is no voltage, repair or replace the ECV fuse, connector and wire harness.

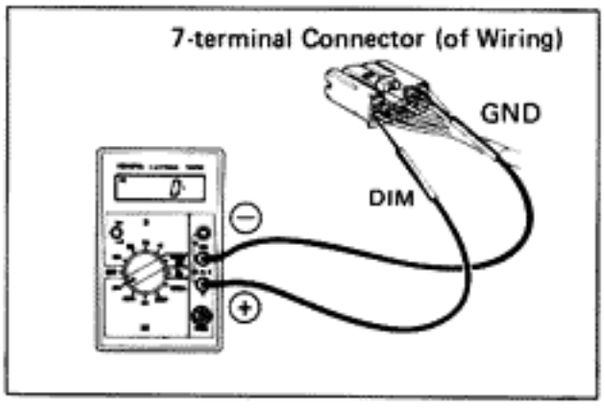

(b) Inspect the battery voltage between terminals DIM and GND of the wiring connector with the light switch turned ON.

NOTE: The voltage is nearly equal to battery voltage.

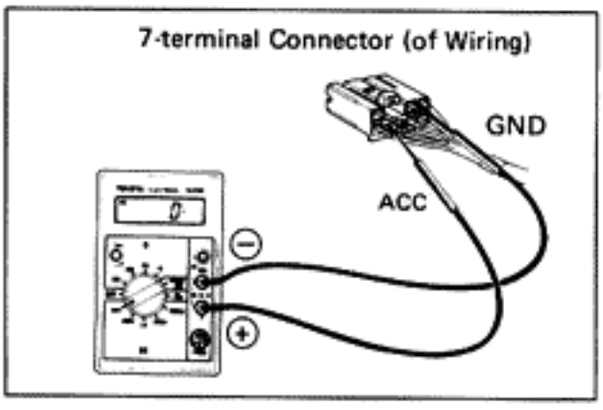

(c) Inspect the battery voltage between terminals ACC and GND of the wiring connector with the ignition switch at ACC or ON position.

NOTE: The voltage is nearly equal to battery voltage.

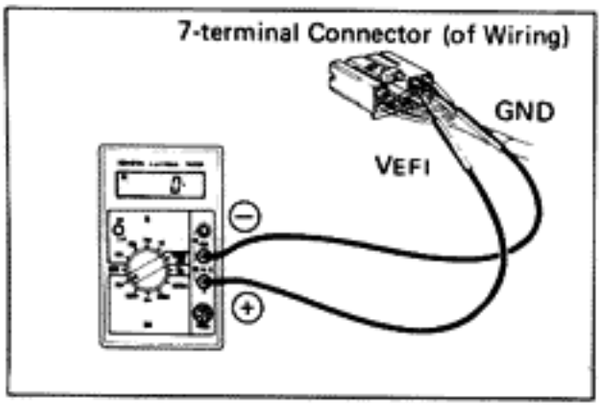

(d) Inspect the battery voltage between terminals VEFI and GND of the wiring connector with the ignition switch at ON position.

NOTE: The voltage is nearly equal to battery voltage.

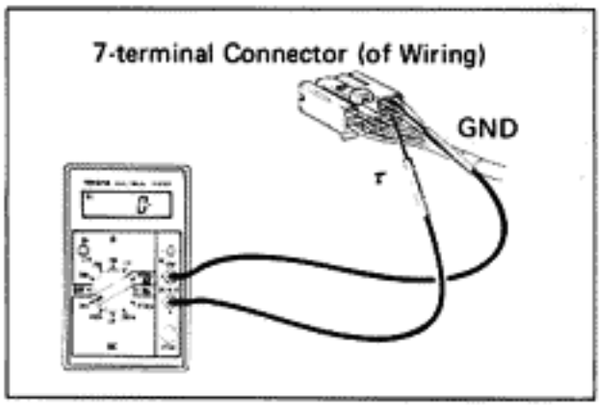

(e) Inspect the battery voltage between terminal τ and body ground of wiring connector with the ignition switch at ON position.

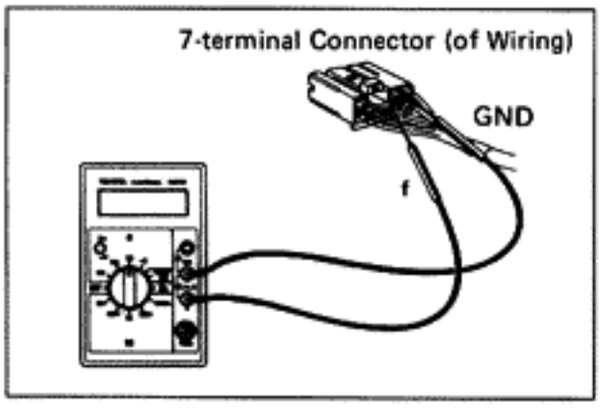

3. INSPECT SPEED SENSOR LINE TO CONNECTOR

With the ignition switch at ON position, check that there is continuity between terminals f and GND of wiring connector four times per each revolution of the magnet shaft.

TEST	TROUBLE
A	Function keys do not operate.

Disconnect 8-terminal connector.

Is there continuity between the following terminals of 8-terminal connector when the key is pushed?

Key	Terminal	Key	Terminal
DATA	DATA – GND	MGP	MGP – GND
FUEL	FUEL – GND	ARRIVE	ARR – GND
CLOCK	CLK – GND	SET	SET – GND

OK → Replace DISPLAY CLUSTER or COMPUTER.

No → Replace Keyboard.

1

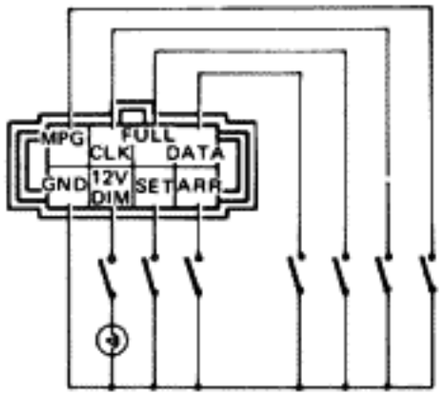

2

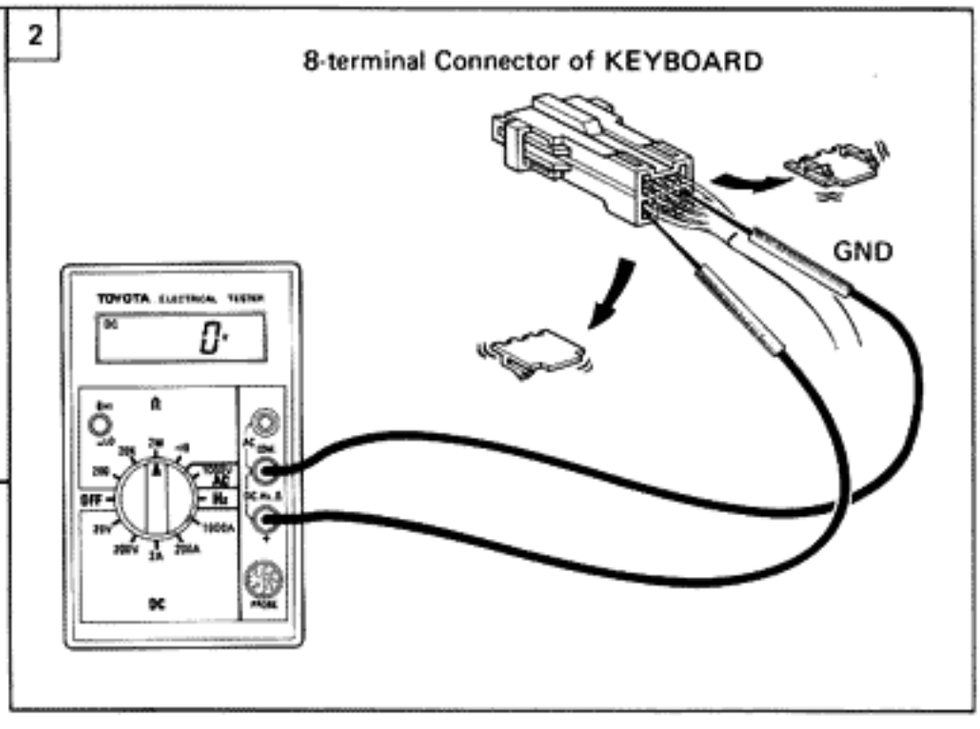

TEST	TROUBLE
B	MPG indication always Zero. Trip reading increases or "ARRIVE" mode indicates " ..... " always.

Is MPG indication always zero?
- No → Replace DISPLAY CLUSTER.
- Yes → Disconnect 14-terminal connector.

① With the ignition switch at ON position, does voltage between terminals f and GND of the 14-terminal connector fluctuate between 0 to 5V when vehicle is moved about 1 meter? (engine not running)
- Yes → Replace DISPLAY CLUSTER.
- No → Is there continuity speed sensor and wire harness?
  - Yes → Replace Keyboard.
  - No → Repair and replace speed sensor and wire harness.

1

14-terminal Connector of COMPUTER

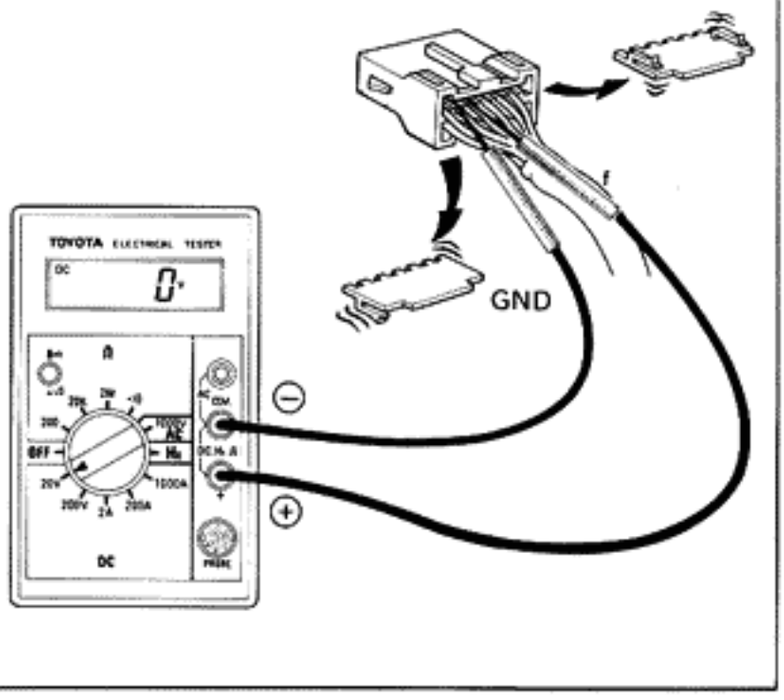

TEST	TROUBLE
C	MPG indication always 70 miles/gal or trip reading does not change.

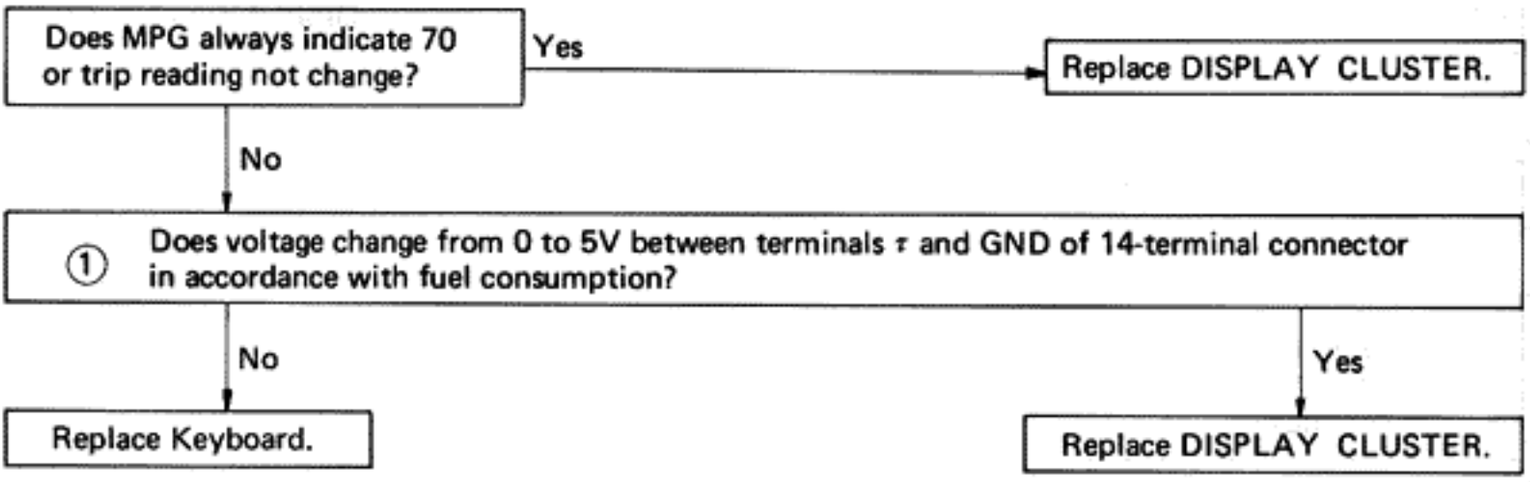

NOTE: If tester indication can be verified, this check is okay.
Analog Type: Needle fluctuation
Digital Type : Number change

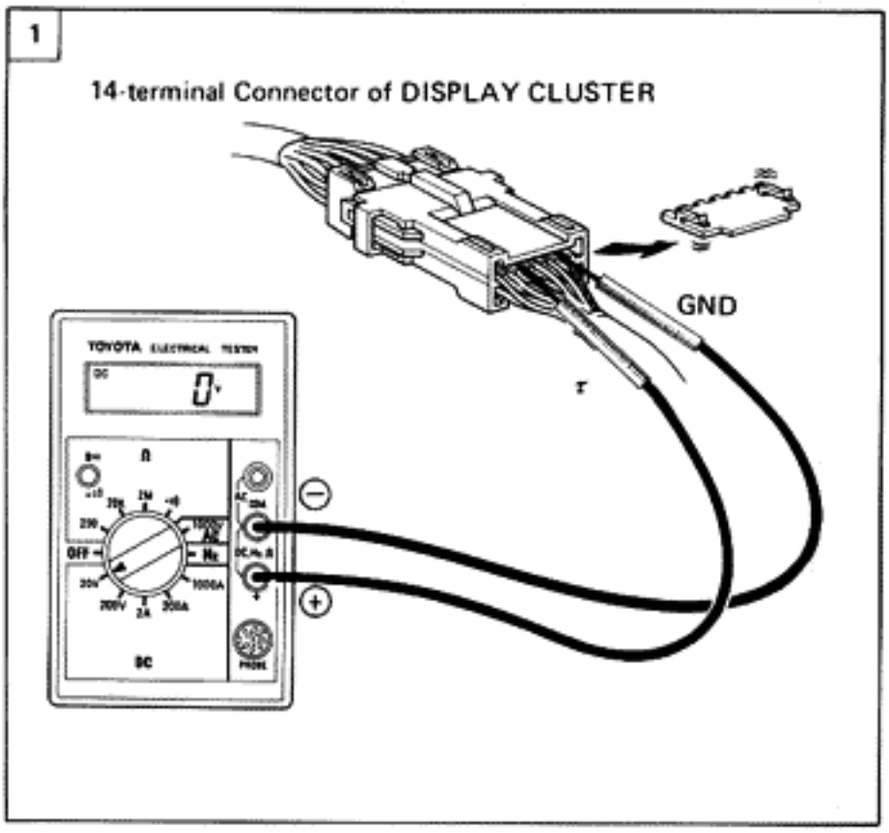

TEST	TROUBLE
D	Lights do not dim.

Disconnect 14-terminal connector.

↓

① With the ignition switch at ACC position and light switch turned ON, is there 0V between terminals DIM and GND of the 14-terminal connector?

No ↓ Replace Keyboard.

Yes ↓ Replace DISPLAY CLUSTER.

1

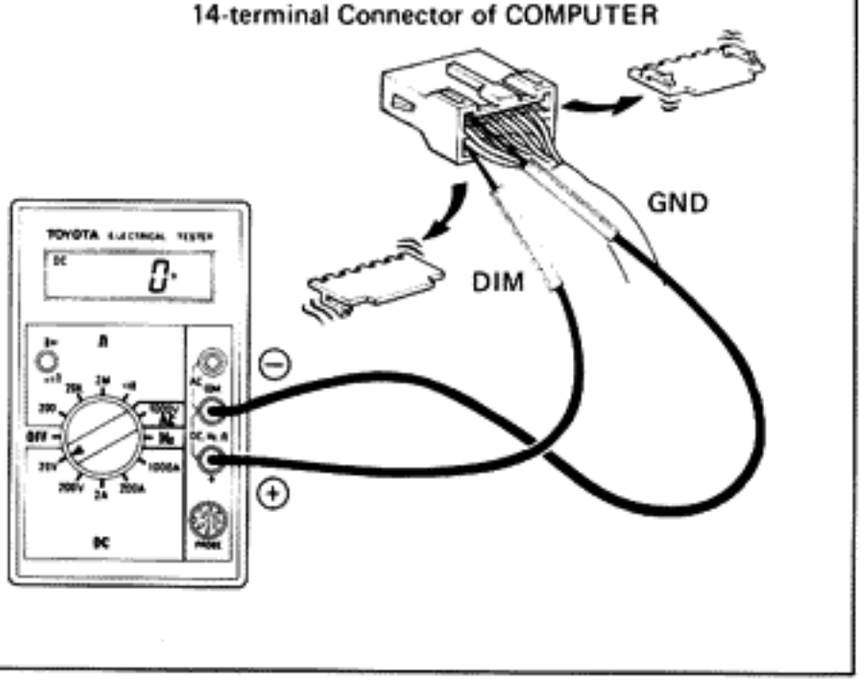

TEST	TROUBLE
E	Inaccurate clock.

Replace DISPLAY CLUSTER

NOTE: Allowable error : ±5 seconds/day.

BODY

	Page
HOOD	BO-2
FRONT DOOR	BO-3
BACK DOOR	BO-11
MOULDING	BO-12
WINDSHIELD	BO-20
QUARTER WINDOW GLASS	BO-26
BACK DOOR GLASS	BO-31
SUN ROOF	BO-35
SAFETY PAD	BO-41
FRONT SEAT	BO-45
REAR SEAT	BO-46
SEAT BELT	BO-47
BODY DIMENSIONS	BO-49

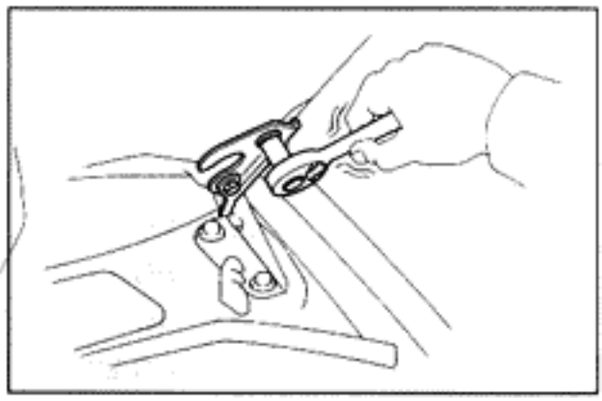

HOOD

ADJUSTMENT OF HOOD

- For forward/rearward and left/right adjustments, loosen the bolts.
- For vertical adjustment of the front edge of the hood, turn the cushion.
- For vertical adjustment of the rear edge of the hood, loosen the bolts.

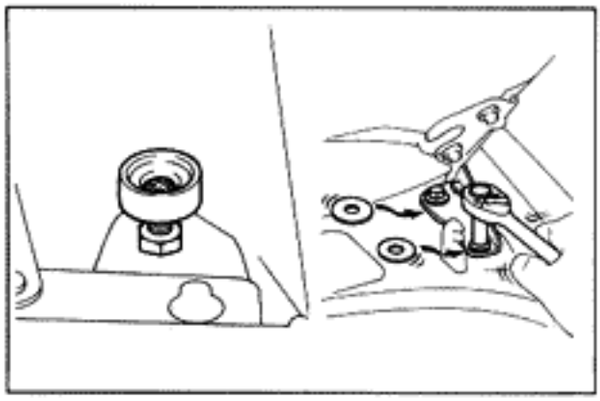

ADJUSTMENT OF HOOD LOCK

ADJUST HOOD LOCK BY LOOSENING MOUNTING BOLTS

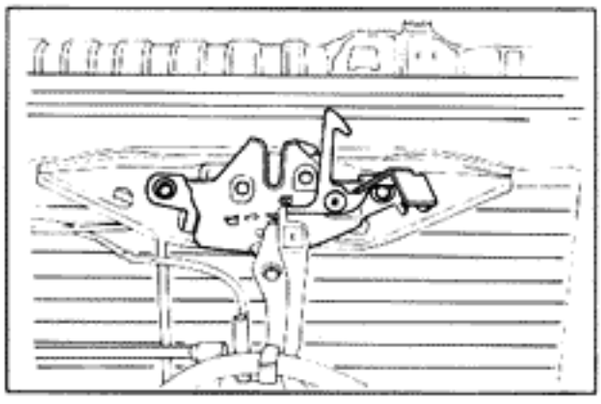

Hood Damper Stay

CAUTION: Handling the damper.

(a) Do not disassemble the damper because the cylinder is filled with gas.

(b) If the damper is damped, drill a 2.0 – 3.0 mm (0.079 – 0.118 in.) hole in the bottom of the removed damper cylinder to completely release the high-pressure gas.

(c) When drilling, chips may fly out so work carefully.

(d) The gas is colorless, odorless and not poisonous.

(e) When working, handle the damper carefully. Never score or scratch the exposed part of the piston rod, and never allow paint or oil to get on it.

(f) Do not turn the piston rod and cylinder with the damper fully extended.

REMOVAL OF DAMPER STAY

1. REMOVE DAMPER STAY UPPER SIDE FROM ENGINE HOOD
2. REMOVE DAMPER STAY LOWER SIDE FROM FENDER APRON

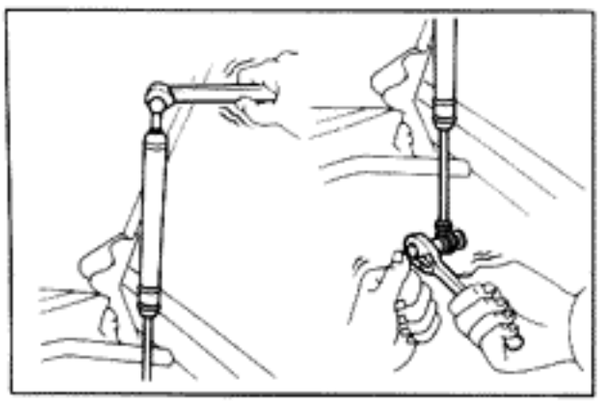

INSTALLATION OF DAMPER STAY

1. INSTALL DAMPER STAY UPPER SIDE TO ENGINE HOOD
2. CONNECT DAMPER STAY LOWER SIDE TO FENDER APRON

FRONT DOOR

COMPONENTS

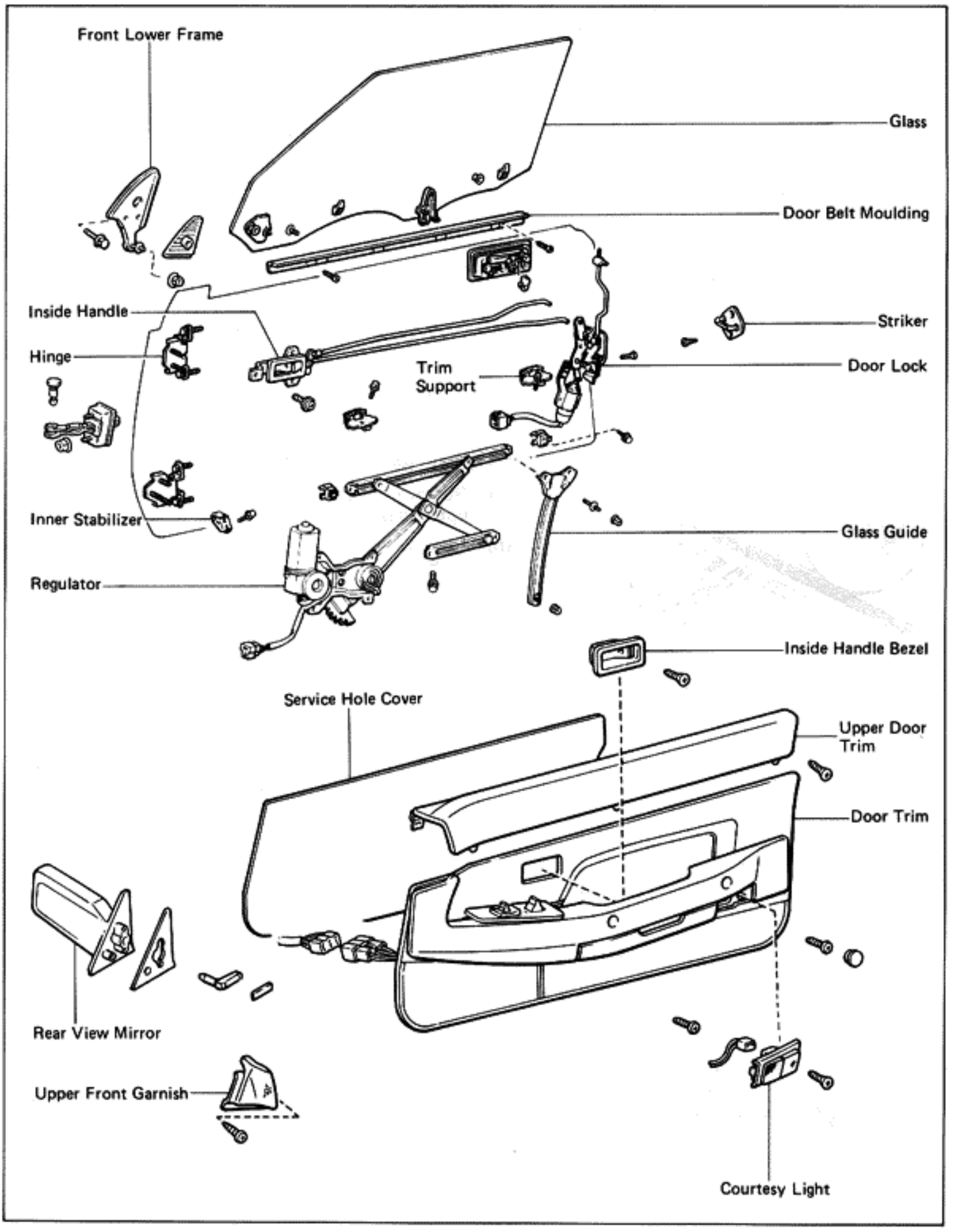

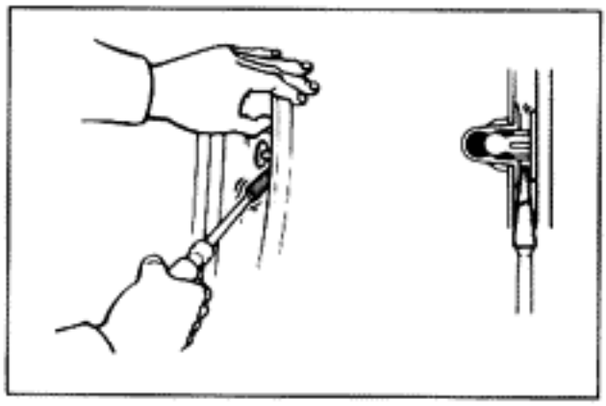

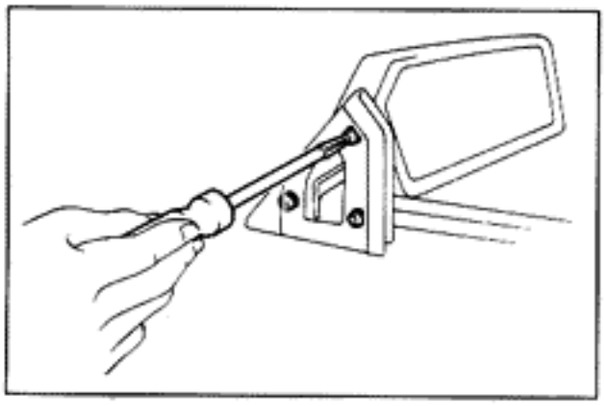

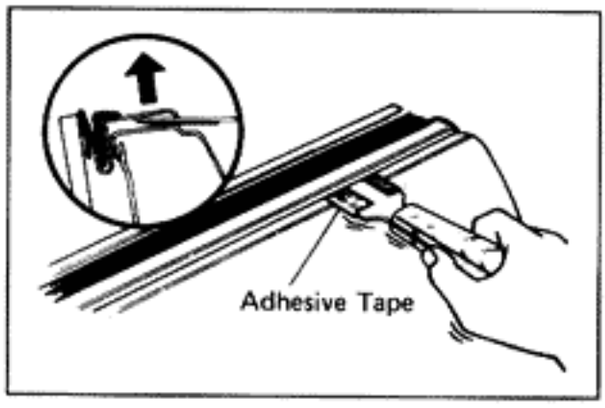

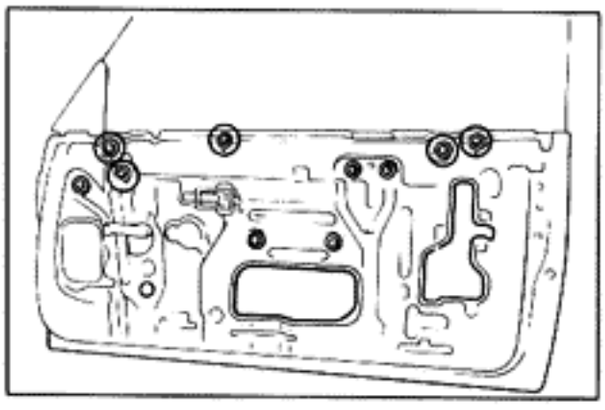

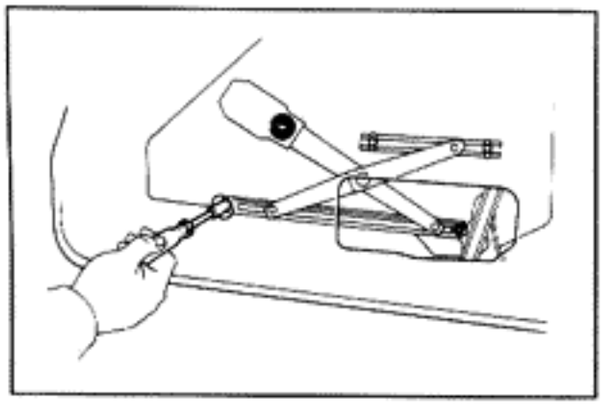

DISASSEMBLY OF FRONT DOOR

(See page BO-3)

1. REMOVE DOOR TRIM

(a) Remove the courtesy light.

(b) Remove four bolts holding the door trim to the front door.

(c) Insert a screwdriver between the retainers and the door panel to pry it loose.

(d) Disconnect the wiring connector and remove the door trim.

(e) Remove the upper door trim.

(f) Remove the upper front garnish.

2. REMOVE SERVICE HOLE COVER

3. REMOVE REAR VIEW MIRROR

(a) Remove the cover.

(b) Disconnect the wiring connector.

(c) Remove the three set screws and mirror.

4. REMOVE BELT MOULDING

(a) Remove the top of the weatherstrip near the glass on both sides of the door.

(b) Remove the two set screws, and pry loose the retainers with a scraper to remove the belt moulding.

5. REMOVE DOOR GLASS

(a) Remove the upper stopper, trim support and inner stabilizer.

(b) Raise the window up 20 – 40 mm (0.79 – 1.57 in.).

(c) Remove the two guide set bolts.

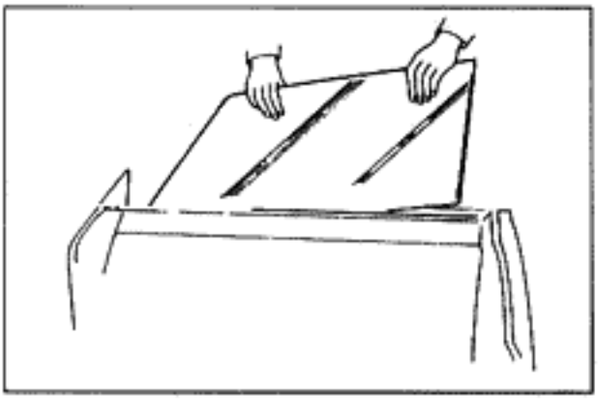

(d) Remove the door glass by pulling it upward.
(e) Remove the glass guide and front lower frame.

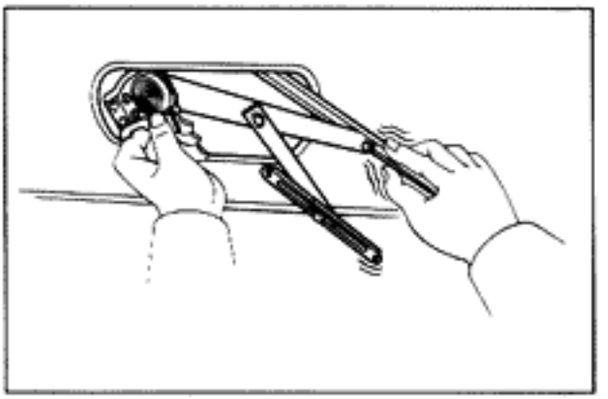

6. REMOVE REGULATOR WITH POWER WINDOW MOTOR
(a) Disconnect the wiring connector.
(b) Remove the regulator mounting bolts.
(c) Remove the regulator with the power window motor through the service hole.

7. DISCONNECT FOLLOWING LINKAGES:
(a) Door opening control link
(b) Door lock control link
(c) Door lock cylinder link
(d) Outside control link

8. REMOVE INSIDE HANDLE

9. REMOVE OUTSIDE HANDLE

10. REMOVE DOOR LOCK AND SOLENOID

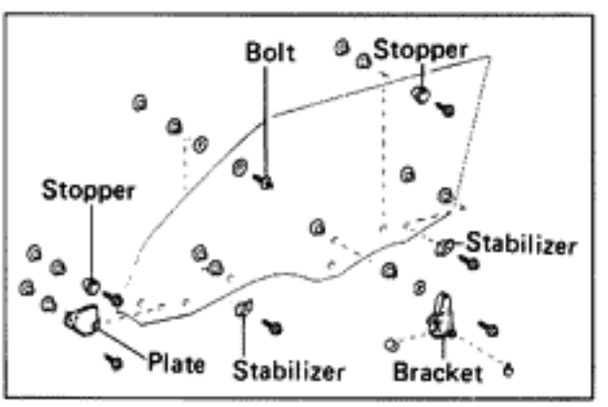

REPLACEMENT OF GLASS

1. REMOVE FOLLOWING PARTS:
(a) Plate
(b) Stopper
(c) Bolt
(d) Stabilizer
(e) Bracket

2. INSTALL EACH PART TO GLASS

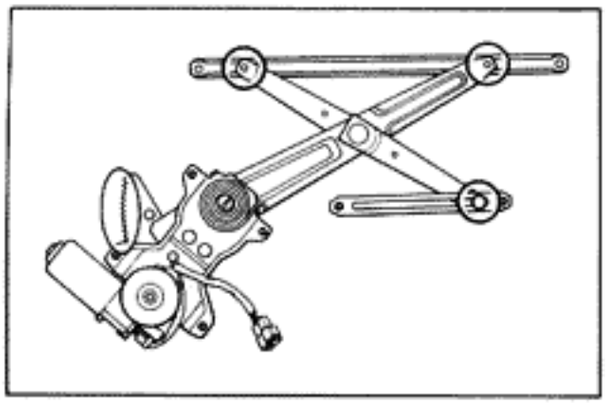

INSTALLATION OF FRONT DOOR

(See page BO-3)

1. **BEFORE INSTALLING PARTS COAT THEM WITH MP GREASE**
   (a) Coat the sliding surface and gears with MP grease.

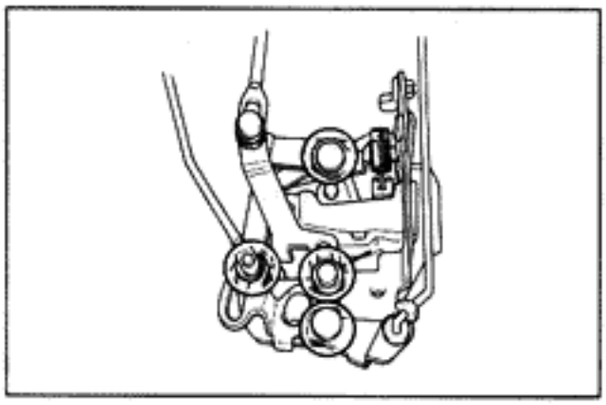

   (b) Coat the sliding surface with MP grease.

2. **INSTALL DOOR LOCK AND SOLENOID WITH MOUNTING SCREWS**
3. **INSTALL OUTSIDE HANDLE**
4. **INSTALL INSIDE HANDLE**
5. **CONNECT FOLLOWING LINKAGES:**
   (a) Outside control link
   (b) Door lock control link
   (c) Door lock cylinder link
   (d) Door open control link

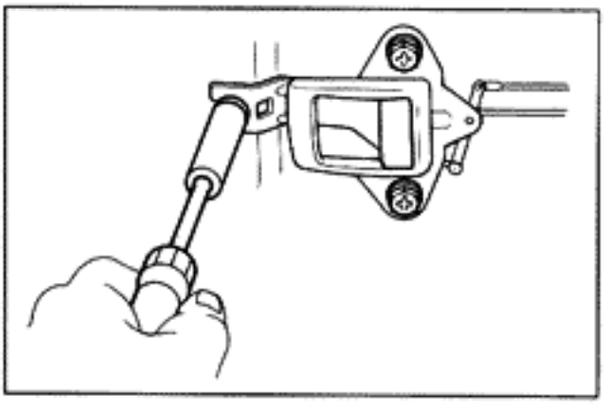

6. **ADJUST DOOR INSIDE HANDLE**
   (a) Loosen the screws.
   (b) Push the door handle forward until strong resistance is felt. Move handle back 0.5 – 1.0 mm (0.020 – 0.039 in.) and tighten the mounting bolts.

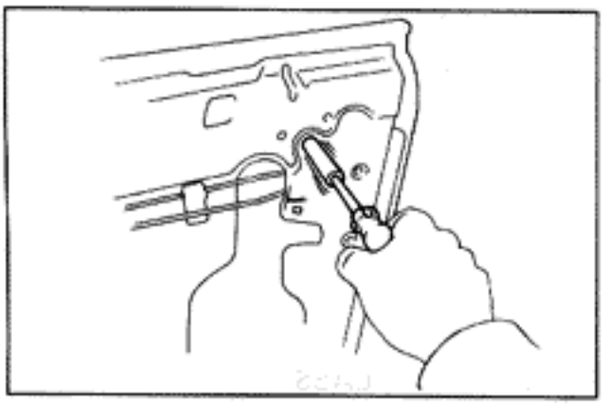

7. **ADJUST DOOR INSIDE LOCK**
   (a) Loosen the adjusting bolt.
   (b) Push the door lock adjusting bolt upward until strong resistance is felt. Move the bolt down 0.5 – 1.0 mm (0.020 – 0.039 in.) and tighten the bolt.

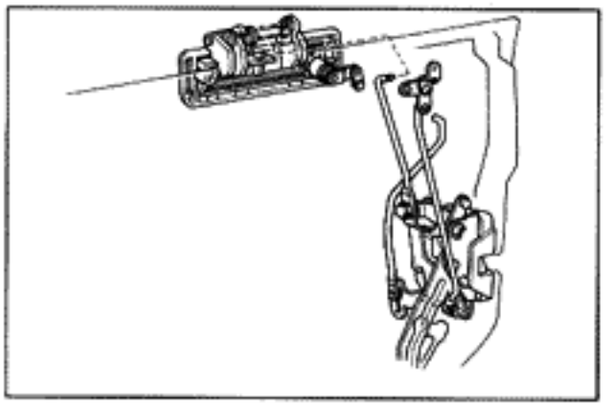

8. ADJUST DOOR OUTSIDE HANDLE

(a) Disconnect the control link.

(b) Raise the handle 0.5 – 1.0 mm (0.020 – 0.039 in.) from the rest position.

(c) Fit the pin into the hole.

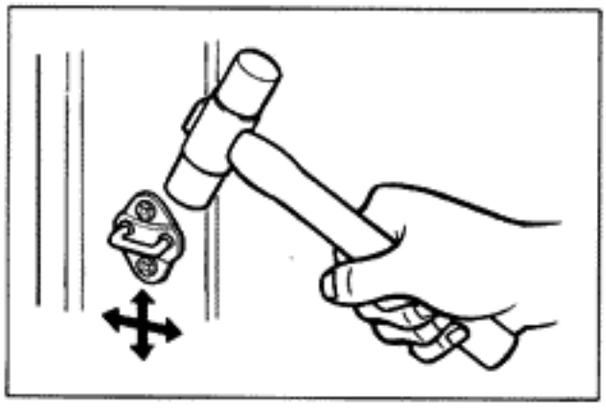

9. ADJUST DOOR LOCK STRIKER

(a) Check that the door fit and door lock linkages are adjusted correctly.

(b) Adjust the striker by loosening the striker mounting screws.

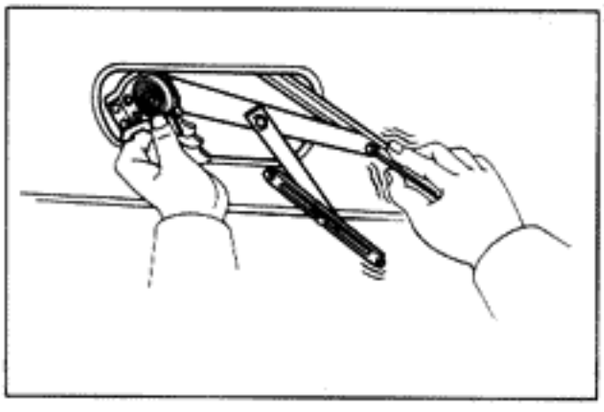

10. INSTALL REGULATOR MOTOR

NOTE: Place the wire connector through the outside of the door panel.

(a) Install the regulator motor through the service hole.

(b) Tighten the mounting bolts.

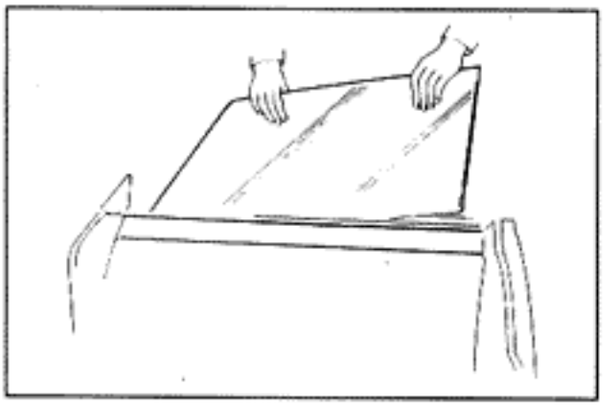

11. INSTALL DOOR GLASS

(a) Install the front lower frame.

(b) Install the glass guide into the door panel.

(c) Install the glass into the door panel.

(d) Install the glass to the lift arm bracket of the regulator.

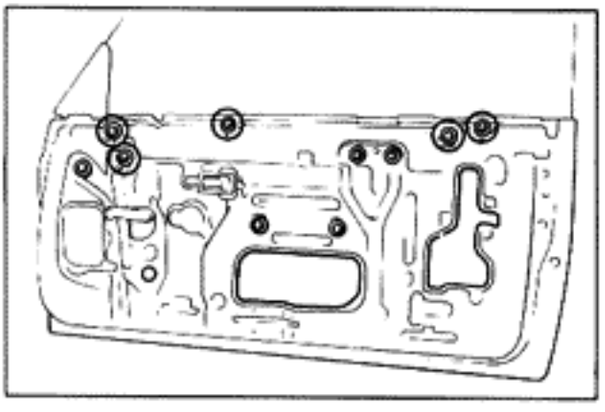

12. INSTALL FOLLOWING PARTS:

(a) Trim support

(b) Upper stopper

(c) Inner stabilizer

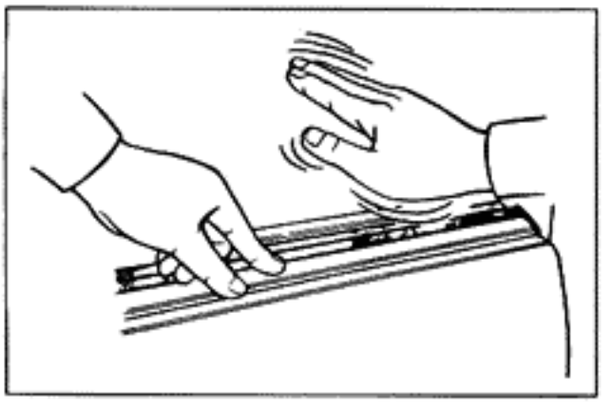

13. INSTALL BELT MOULDING

(a) Install the belt moulding by tapping it with your hand.

(b) Install the two set screws.

(c) Install the weatherstrip on top near the glass on both sides of the door.

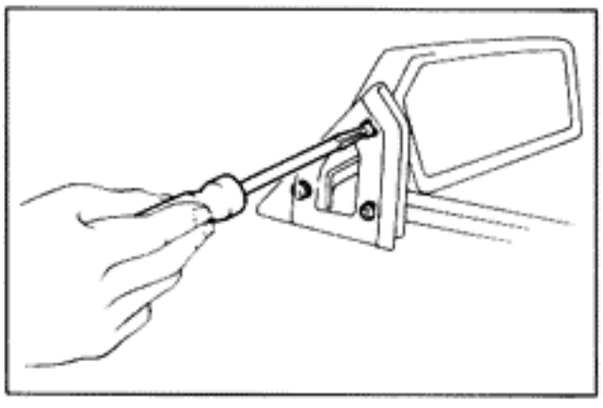

14. INSTALL REAR VIEW MIRROR

(a) Install the rear view mirror.

(b) Connect the wiring connector.

(c) Install the cover.

15. ADJUST FRONT DOOR GLASS

NOTE: Before adjusting the glass, check that the fitting of the door to the body is proper.

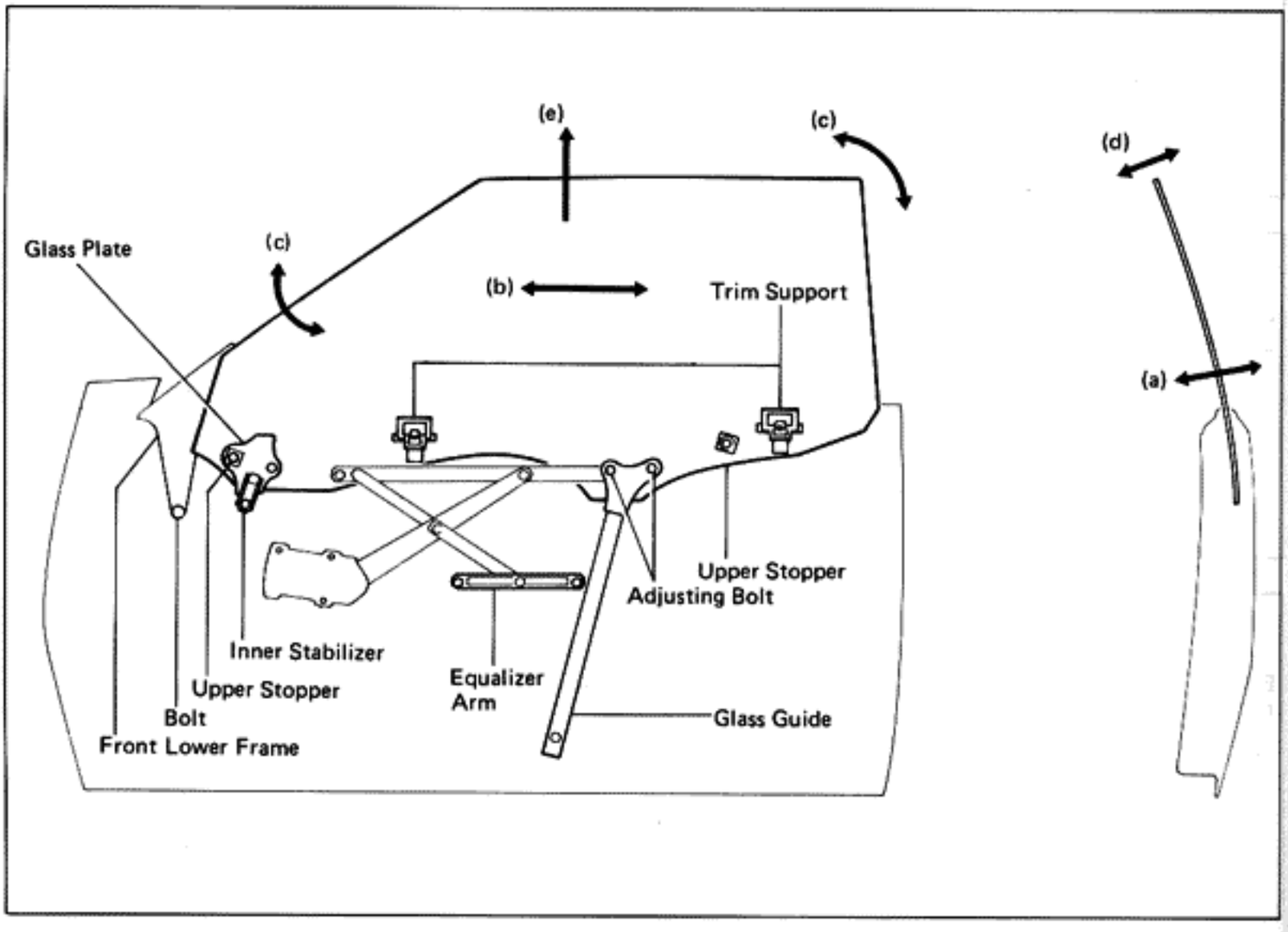

(a) Adjust the glass and belt moulding contact with the trim support.

(b) Slide the glass back and forth and adjust the fore and aft positions of the upper glass guide tip.

(c) Adjust the glass tilt angle by tilting the equalizer installation.

(d) Adjust the upper glass contact with the two adjusting bolts of glass guide tip.

(e) Adjust the upper position of the glass with the fore and aft upper stoppers.

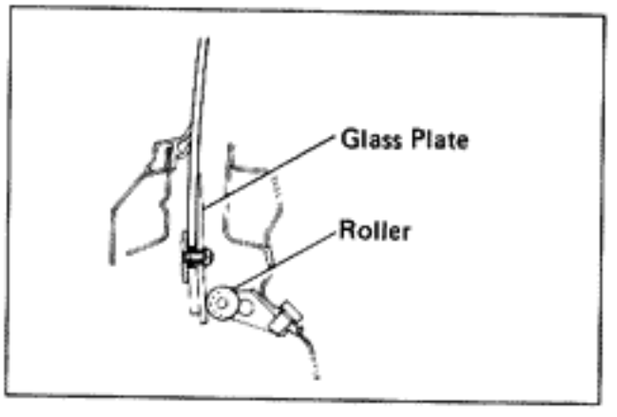

(f) With the door glass fully closed, adjust the glass plate so the inner stabilizer lightly makes contact with it.

After these adjustments are completed, adjust the front lower frame with the lower bolt so that there is a proper fit between the front pillar and glass.

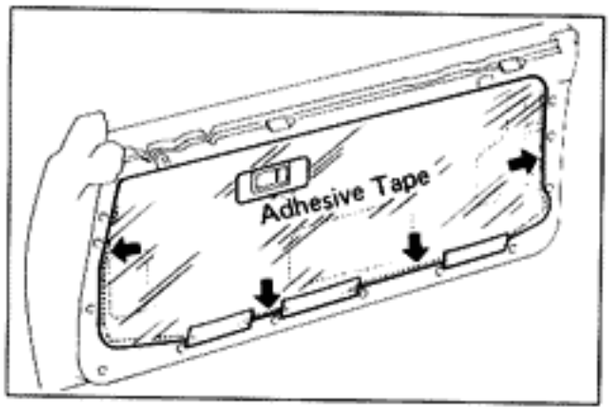

16. INSTALL SERVICE HOLE COVER

(a) Connect the wire harness connector.

(b) Seal the service hole cover with adhesive.

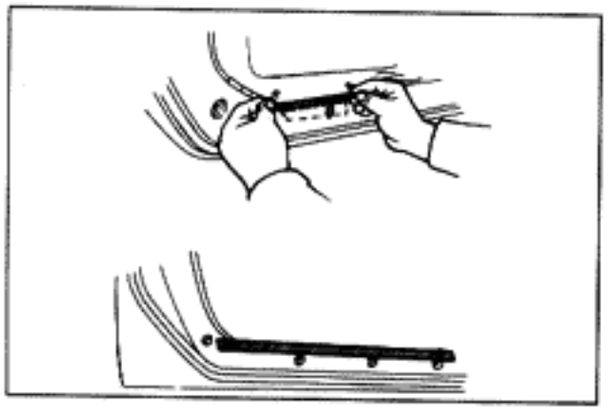

(c) Insert the lower edge of the service hole cover into the panel slit.

(d) Seal the panel slit with cotton tape.

CAUTION: Do not block the trim clip seating with the tape.

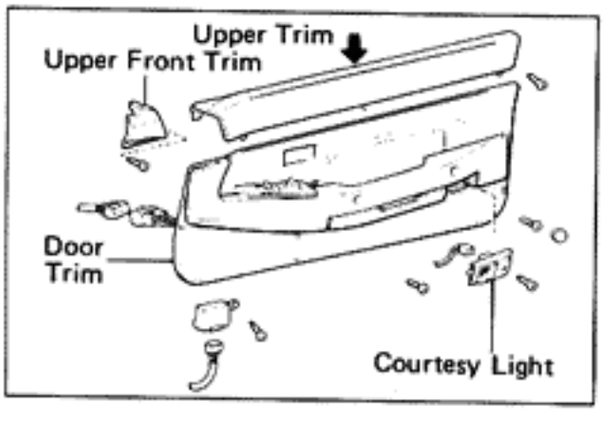

17. INSTALL DOOR TRIM

(a) Connect each wiring connector.

(b) Install the upper front trim.

(c) Install the upper trim.

(d) Install the door trim.

(e) Install the courtesy light.

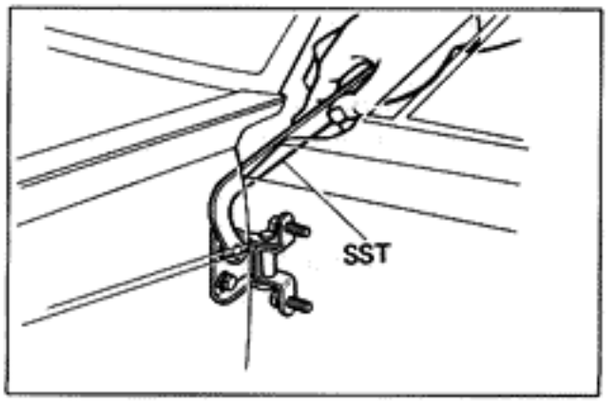

ADJUSTMENT OF FRONT DOOR

1. ADJUST DOOR IN FORWARD/REARWARD AND VERTICAL DIRECTIONS

Using SST, loosen the body side hinge bolts.

SST 09812-00010

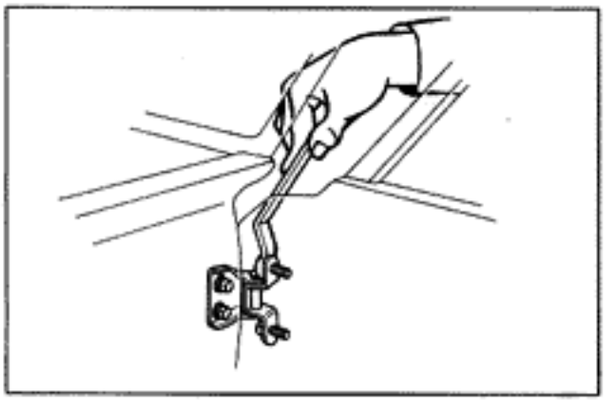

2. ADJUST DOOR IN LEFT/RIGHT AND VERTICAL DIRECTIONS

Using a wrench, loosen the door side hinge bolts.

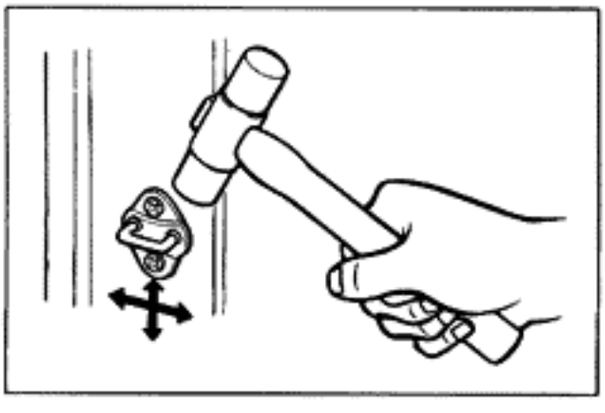

3. ADJUST DOOR LOCK STRIKER

(a) Check that the door fit and door lock linkages are adjusted correctly.

(b) Adjust the striker by loosening the striker mounting screws.

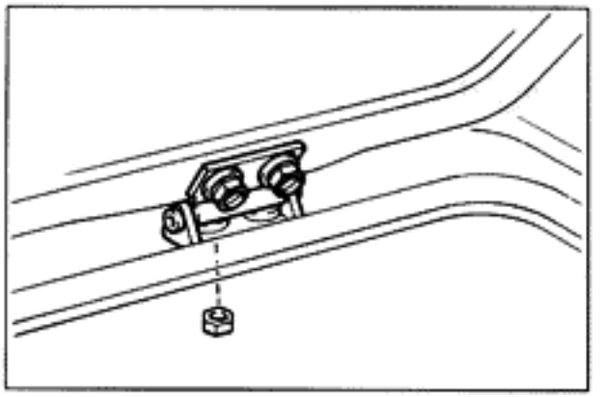

BACK DOOR

ADJUSTMENT OF BACK DOOR

(a) For forward/rearward and left/right adjustments, loosen the bolts.

(b) For vertical adjustment of the front end of the lid, increase or decrease the number of washers.

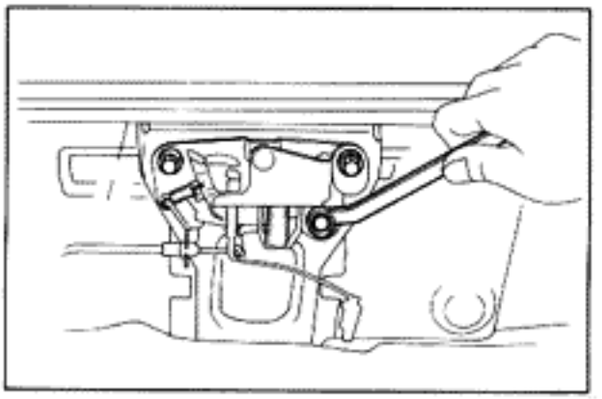

ADJUSTMENT OF LOCK AND STRIKER

(a) Remove the lower back panel cover.

(b) Adjust lock and striker by loosening mounting bolts.

Back Door Damper Stay

CAUTION: Handling the damper.

(a) Do not disassemble the damper because the cylinder is filled with gas.

(b) If the damper is damped, drill a 2.0 – 3.0 mm (0.079 – 0.118 in.) hole in the bottom of the removed damper cylinder to completely release the high-pressure gas.

(c) When drilling, chips may fly out so work carefully.

(d) The gas is colorless, odorless and not poisonous.

(e) When working, handle the damper carefully. Never score or scratch the exposed part of the piston rod, and never allow paint or oil to get on it.

(f) Do not turn the piston rod and cylinder with the damper fully extended.

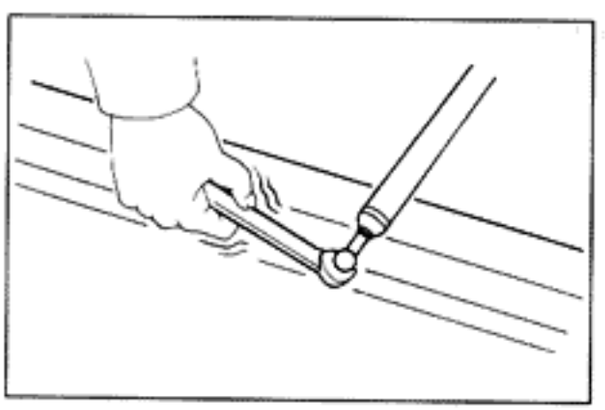

REMOVAL OF DAMPER STAY

1. REMOVE DAMPER STAY UPPER SIDE FROM BACK DOOR

2. REMOVE DAMPER STAY LOWER SIDE FROM REAR PILLAR

INSTALLATION OF DAMPER STAY

1. INSTALL DAMPER STAY UPPER SIDE TO BACK DOOR

2. CONNECT DAMPER STAY LOWER SIDE TO REAR PILLAR

MOULDING

Windshield Outside Moulding

COMPONENTS

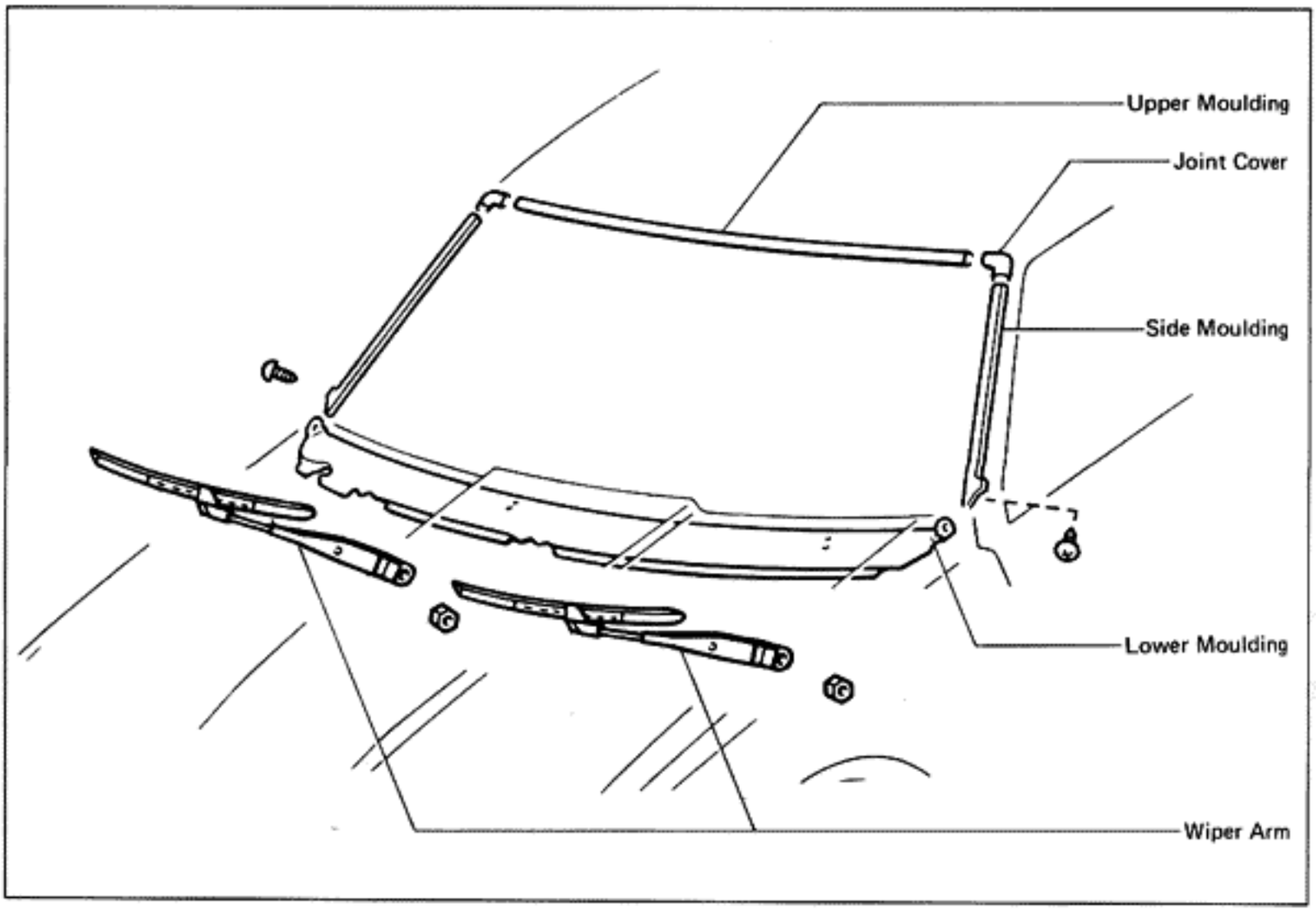

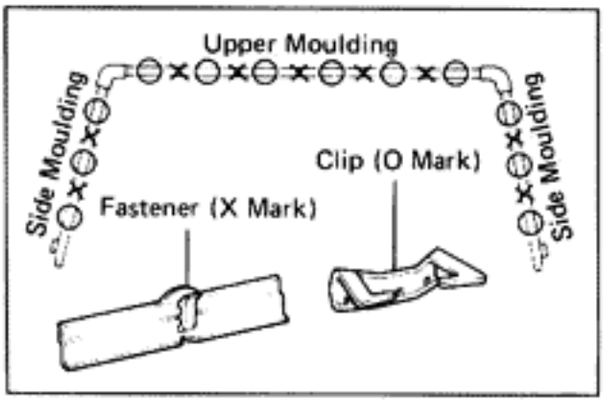

REMOVAL OF OUTSIDE MOULDING

There are two types of clips for moulding installation.

Locations of these clips and fasteners are as shown in the figure.

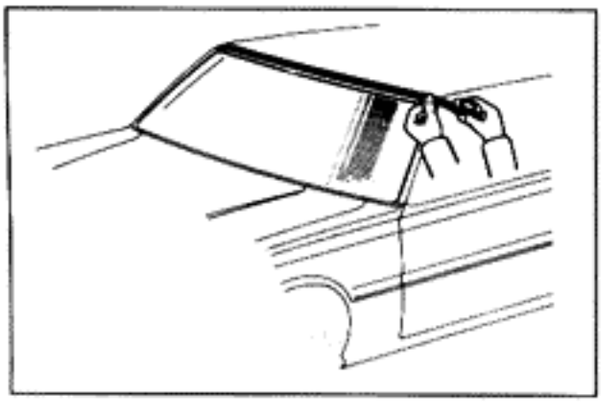

Carefully apply adhesive tape to protect the body.

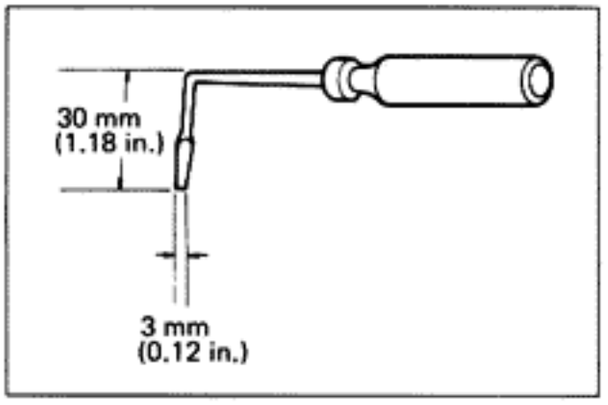

1. **BEND A SMALL SCREWDRIVER AT RIGHT ANGLE**

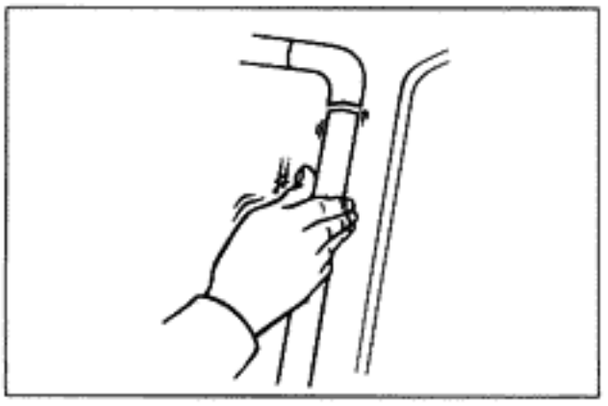

2. **REMOVE WIPER ARM**

3. **REMOVE JOINT COVER**
   (a) Remove the two screws under the side moulding.
   (b) Push the side moulding down.
   (c) Remove the joint cover from upper moulding.

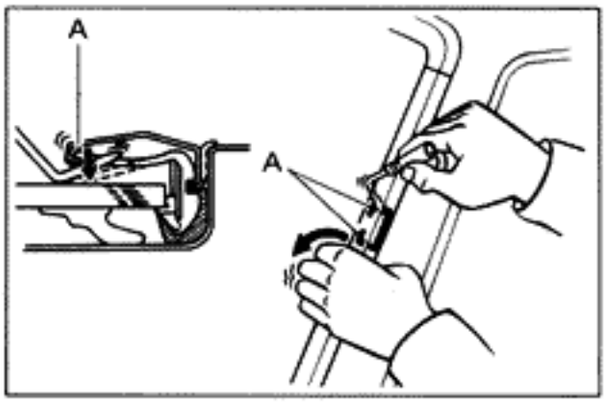

4. **REMOVE SIDE MOULDING**
   (a) Insert the tip of the screwdriver between the moulding and clip, and twist it to pry loose the clips (A) on the window side.

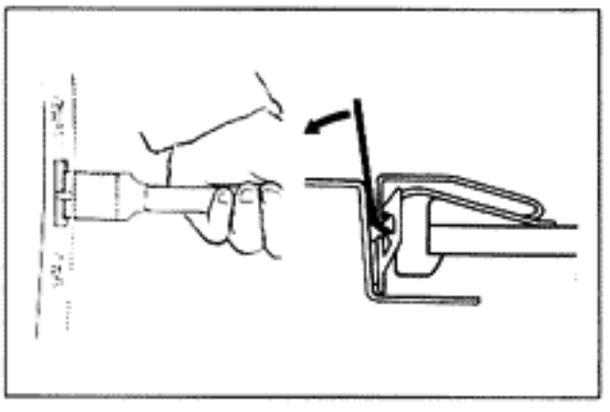

   (b) Pry loose the fasteners and clips and remove the moulding.

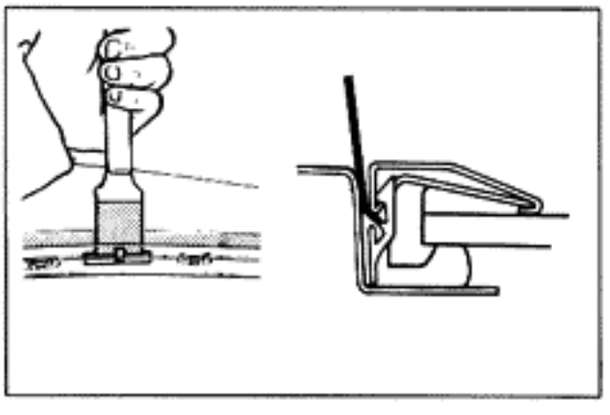

5. **REMOVE UPPER MOULDING**
   (a) Pry loose the fasteners and clips.

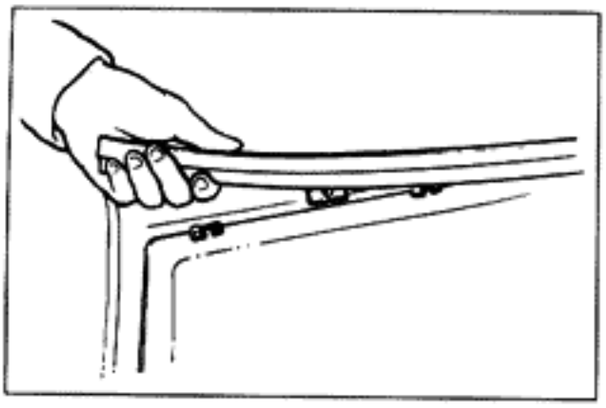

(b) Slide the moulding out.

NOTE: Do not bend the moulding.

6. **REMOVE LOWER MOULDING**

Remove the two screws and the moulding.

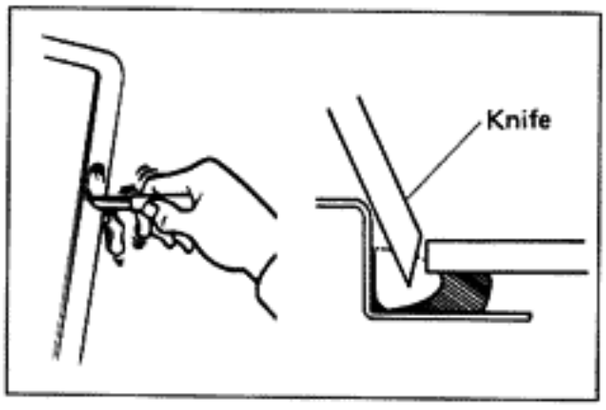

REPLACEMENT OF FASTENER AND CLIP

If any fastener or clip is damaged, replace it.

1. **REMOVE DAMAGED CLIP**

2. **CUT OLD ADHESIVE OFF AROUND CLIP INSTALLATION AREA**

(a) Grind a notch into the clip so it latches onto the glass edge.

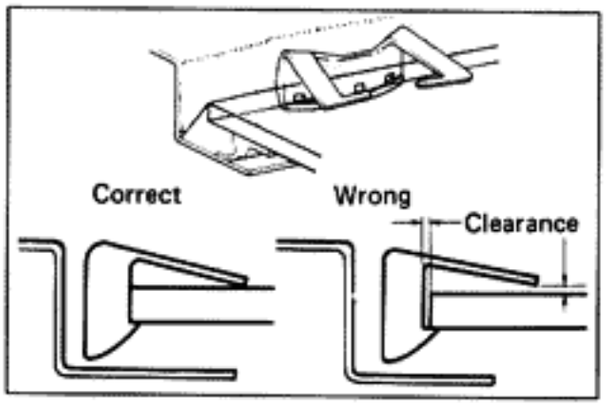

(b) Temporarily install the clip and confirm that the clip tip is not sunk below the surface.

(c) If the tip of the clip is sunk below the surface, replace it.

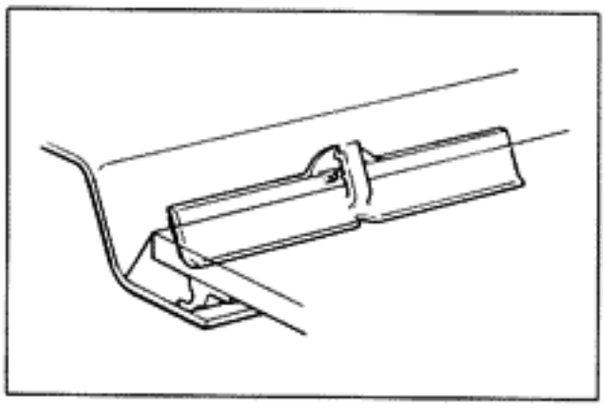

3. **REMOVE ANY DAMAGED FASTENER**

4. **CUT OLD ADHESIVE OFF AROUND FASTENER INSTALLATION AREA**

5. **INSTALL FASTENER**

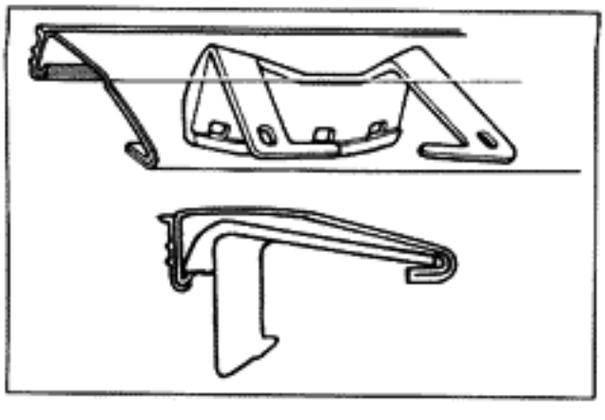

INSTALLATION OF OUTSIDE MOULDING

(See page BO-12)

1. **INSTALL LOWER MOULDING**

2. **INSTALL NEW CLIP INTO MOULDING**

Install the moulding to the body so that the clips and fasteners are not in a position where they will contact each other.

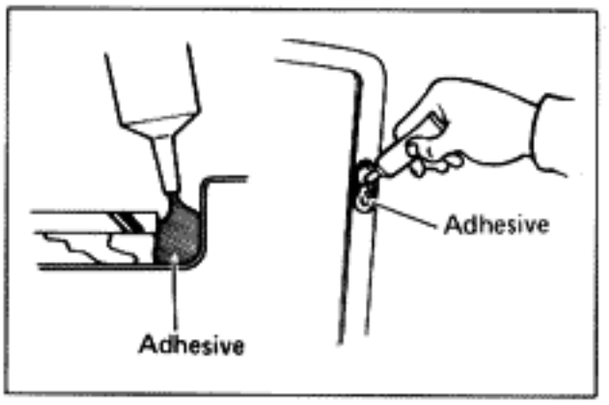

3. APPLY ADHESIVE AT CLIP INSTALLATION AREA

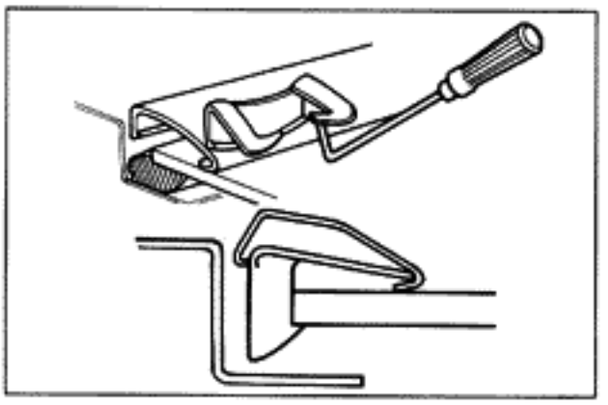

4. INSTALL UPPER MOULDING
   (a) Place the moulding onto the body.
   (b) Pry up the clips on the body side and install to the moulding.

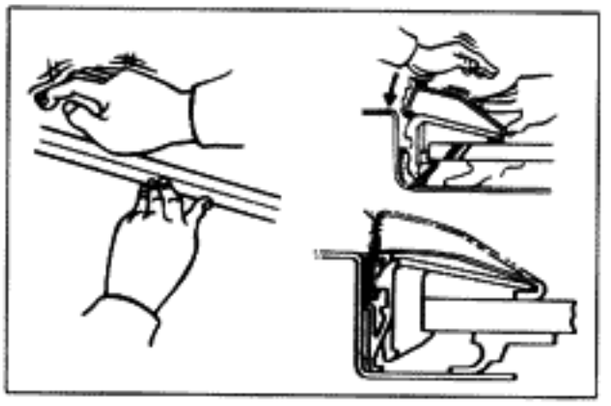

   (c) Tap the moulding with your hand to fasten the clips at the glass edge.

   At the same time, install the fasteners by tapping them by hand.

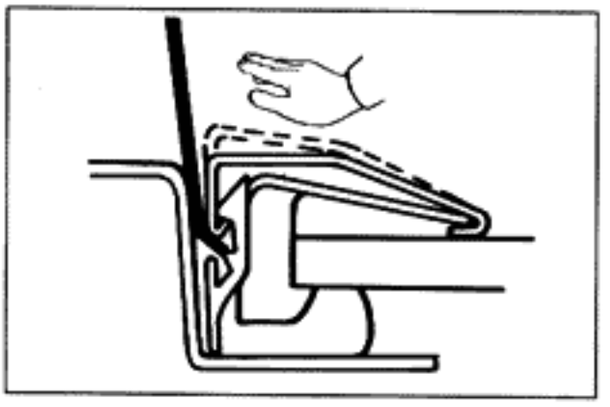

   (d) If the moulding is not at the same level as the body, insert a scraper between them and tap on the moulding while pushing on the fastener.

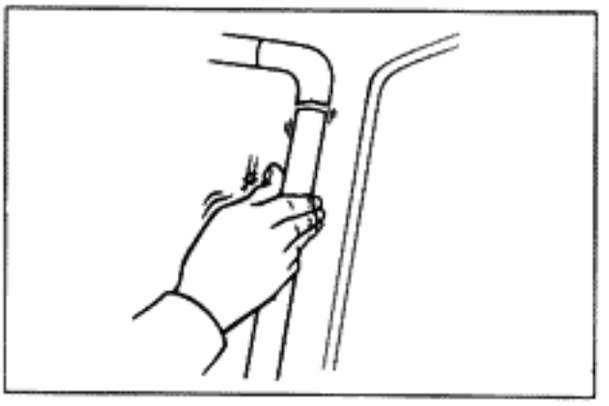

5. INSTALL SIDE MOULDING IN SAME MANNER AS FOR UPPER MOULDING

6. INSTALL JOINT COVER
   (a) Slide the side moulding down.
   (b) Install the joint cover to the upper moulding.
   (c) Connect the side moulding into the joint cover.

7. INSTALL SCREW ON MOULDING

8. INSTALL WIPER ARM

Side Moulding and Garnish

COMPONENTS

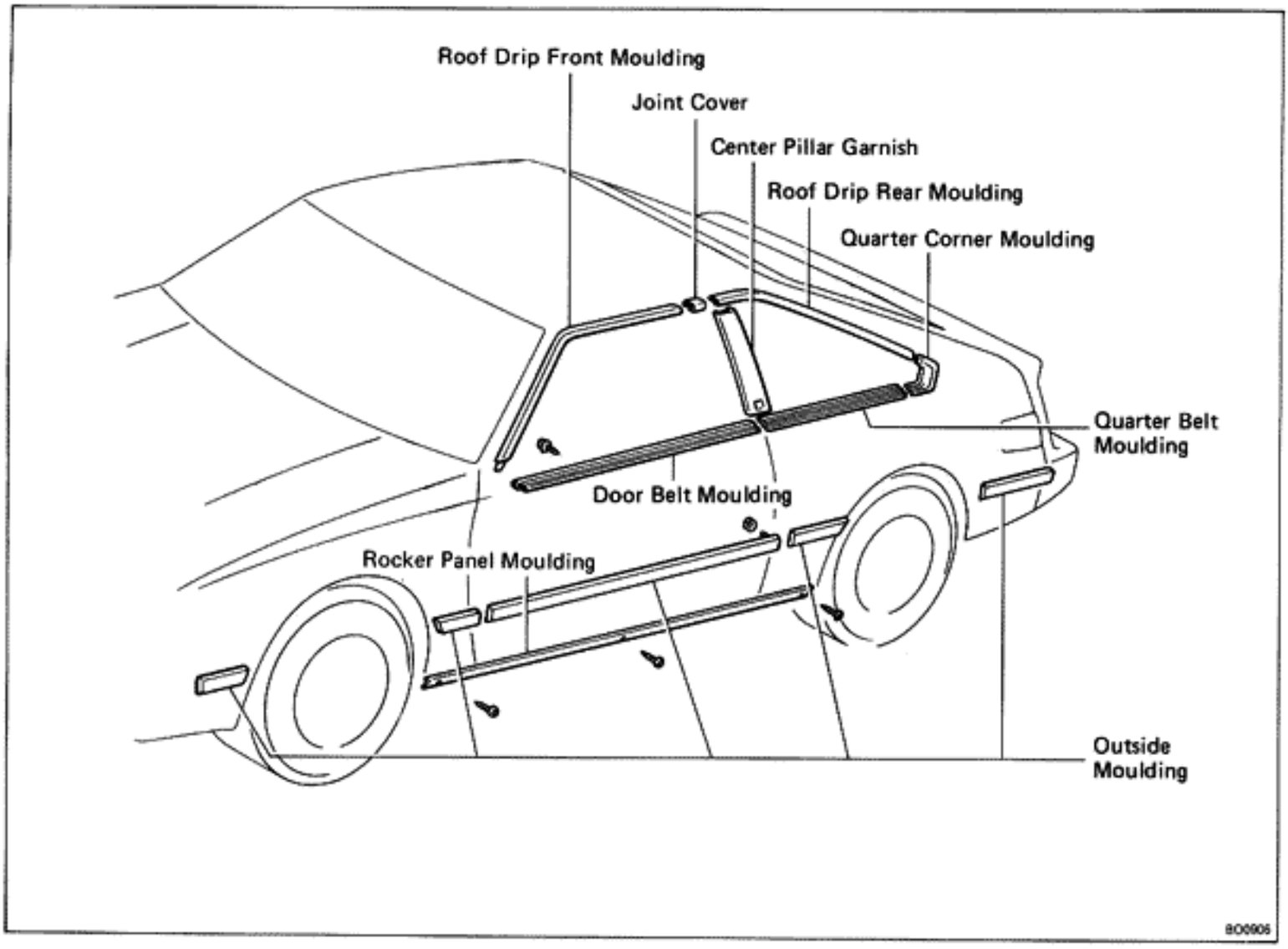

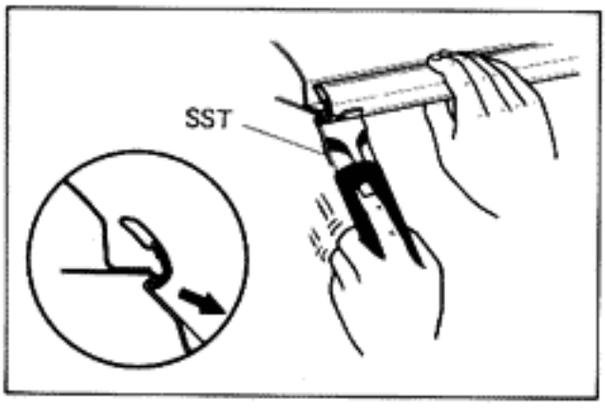

REMOVAL OF ROOF DRIP MOULDING

PULL OFF ROOF DRIP MOULDING

(a) Using SST, pull off the joint cover.

(b) Using SST, pull off the roof drip moulding from both ends.

SST 09806-30010

NOTE: Remove the moulding corners last.

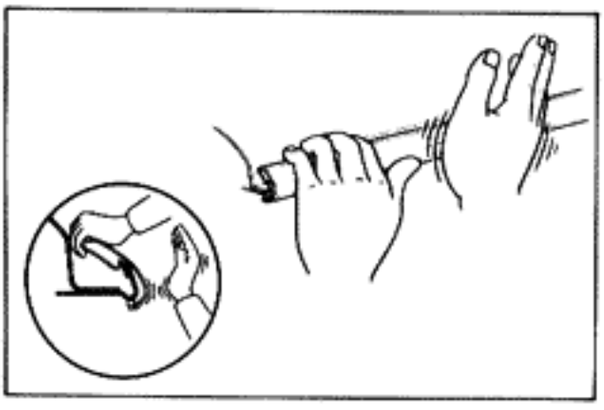

INSTALLATION OF ROOF DRIP MOULDING

INSTALL DRIP MOULDING BY HAND

(a) Attach the upper edge of the moulding to the body flange.

Fit the moulding by tapping it by hand.

(b) Install the joint cover.

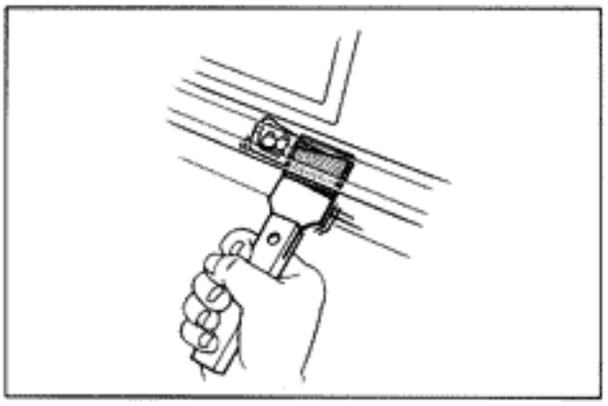

REMOVAL OF QUARTER BELT MOULDING

1. APPLY ADHESIVE TAPE TO PROTECT BODY
2. REMOVE BELT MOULDING
   (a) Insert the scraper and pry loose the clips facing rearward.

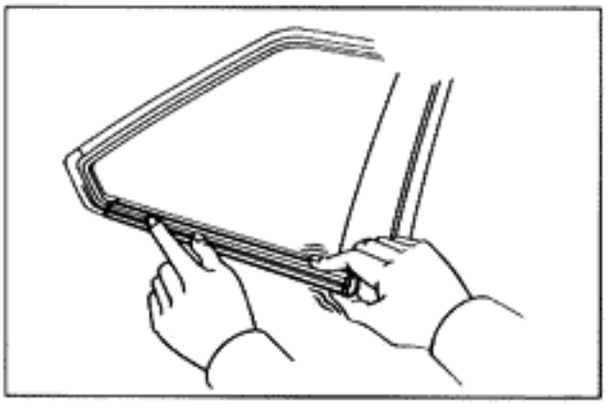

   (b) Pull the moulding forward and remove it.

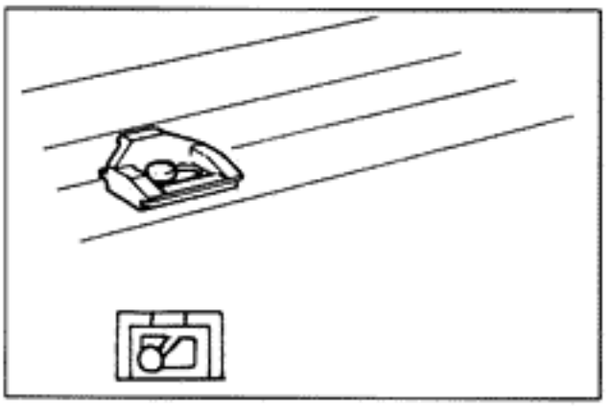

INSTALLATION OF QUARTER BELT MOULDING

1. INSTALL CLIPS ONTO STUDS
   Install the clips onto the studs.

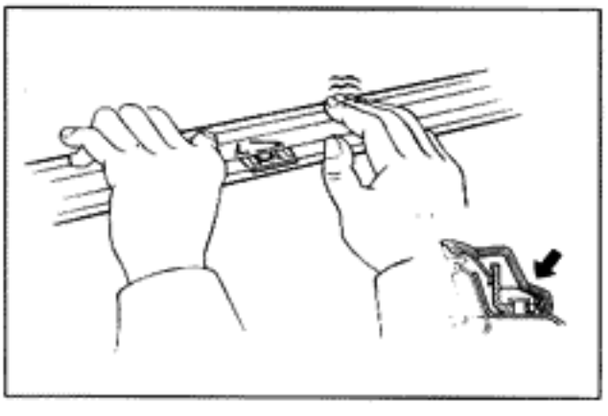

2. INSTALL BELT MOULDING
   (a) Attach the upper edge of the moulding to the clips.
   (b) Fit the lower edge of the moulding by pushing with your hands.
   (c) Connect the belt moulding to the corner joint by sliding it rearward.

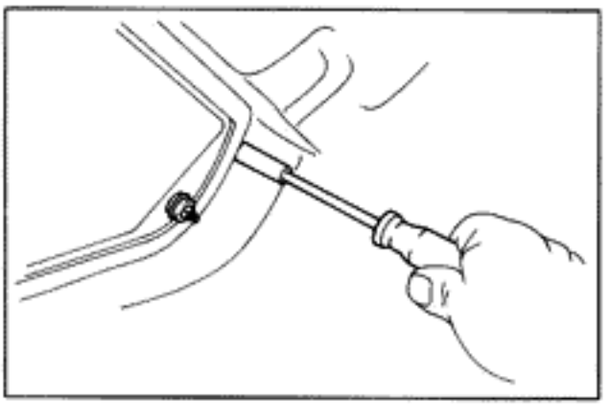

REMOVAL OF QUARTER CORNER MOULDING

1. REMOVE QUARTER TRIM AND GARNISH
2. REMOVE CORNER MOULDING
   (a) Remove the set screw.
   (b) Remove the moulding.

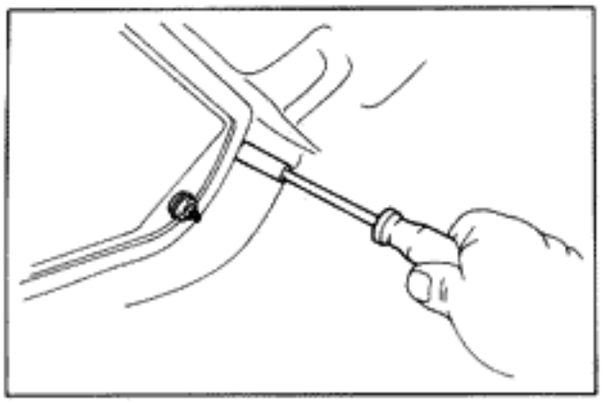

INSTALLATION OF QUARTER CORNER MOULDING

1. INSTALL CORNER MOULDING
   (a) Install the moulding.
   (b) Install the screw over the cushion rubber.
2. INSTALL QUARTER TRIM AND GARNISH

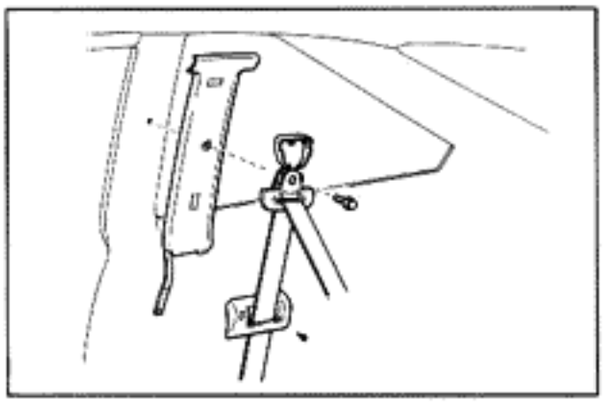

REMOVAL OF CENTER PILLAR GARNISH

1. REMOVE FOLLOWING PARTS:
   (a) Seat belt guide
   (b) Seat belt shoulder another bolt
   (c) Inner garnish
2. REMOVE OUTSIDE GARNISH
   Remove the two set nuts and remove the garnish.

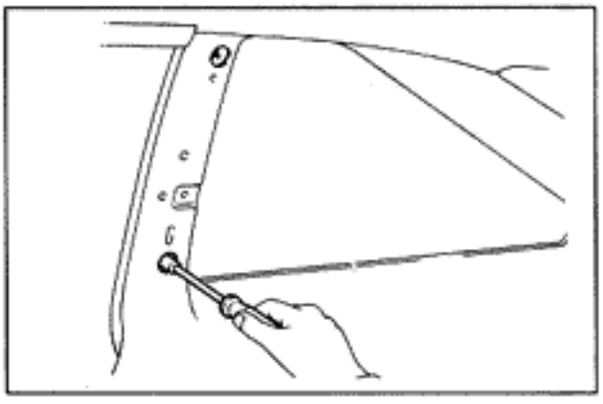

INSTALLATION OF CENTER PILLAR GARNISH

1. INSTALL OUTSIDE GARNISH
2. INSTALL FOLLOWING PARTS:
   (a) Inner garnish
   (b) Seat belt shoulder anchor bolt
   (c) Seat belt guide

REMOVAL OF DOOR BELT MOULDING

1. REMOVE FOLLOWING PARTS:
   (a) Door trim panel (See page BO-4)
   (b) Door weatherstrips on both ends

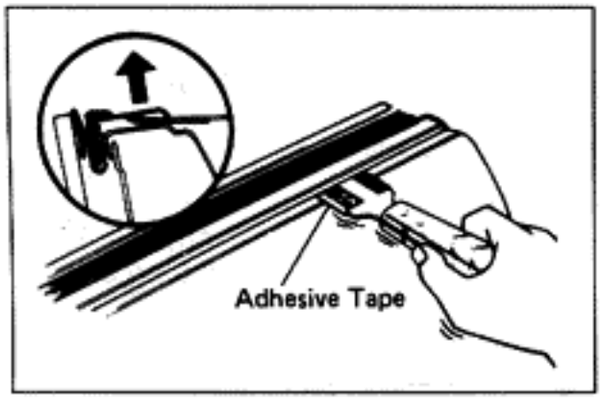

2. REMOVE DOOR BELT MOULDING
   (a) Remove two screws from the moulding.
   (b) Pry loose the clips with a scraper and remove the belt moulding.

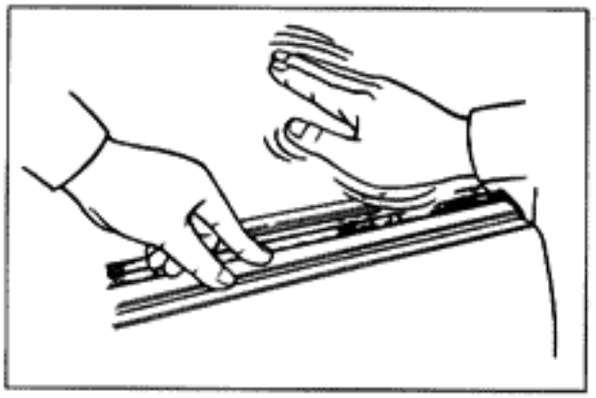

INSTALLATION OF DOOR BELT MOULDING

1. INSTALL BELT MOULDING
   (a) Tap the moulding onto the clips by hand.
   (b) Install the moulding with the two screws.
2. INSTALL FOLLOWING PARTS:
   (a) Door weatherstrip on both ends
   (b) Door trim (See page BO-9)

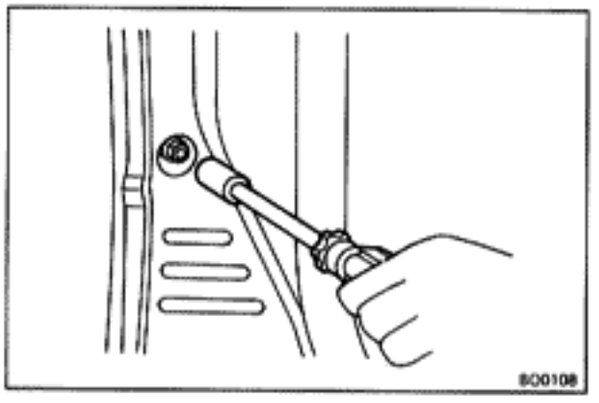

REMOVAL OF OUTSIDE MOULDING

1. REMOVE MOULDING MOUNTING NUT
   Remove the moulding mounting nut from the rear side of the door.
2. REMOVE MOULDING
   Using a scraper, pry loose the clips and remove the moulding.

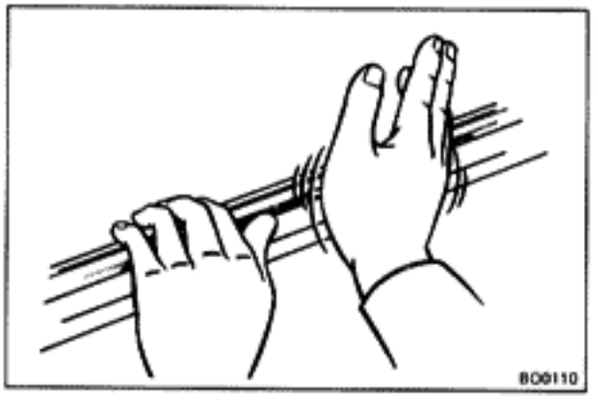

INSTALLATION OF OUTSIDE MOULDING

1. BEFORE INSTALLING MOULDING, REPLACE CAPS
   Remove the remaining caps on the clip installation hole of the body, and install new caps.
2. INSTALL MOULDING
   (a) Install the clips to the moulding.
   (b) Install the moulding onto the panel by hand.
3. INSTALL MOULDING MOUNTING NUT

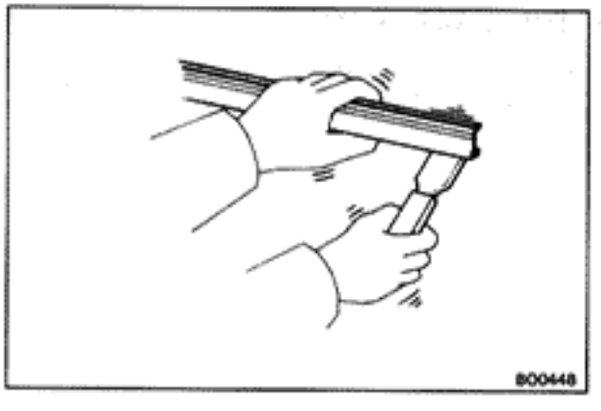

REMOVAL OF ROCKER PANEL MOULDING

REMOVE MOULDING
   (a) Remove the three screws.
   (b) Pry loose the clips with a scraper and remove the moulding.

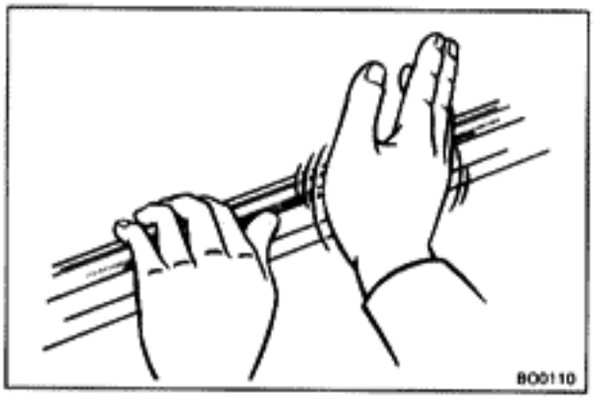

INSTALLATION OF ROCKER PANEL MOULDING

1. BEFORE INSTALLING MOULDING, REPLACE CAPS
   Remove the remaining caps on the clip installation hole of the body, and install new caps.
2. INSTALL MOULDING BY HAND
   Tap the moulding onto the clips by hand.
3. INSTALL THREE SCREWS

WINDSHIELD

TOOLS AND SUPPLIES

Part Name and Part No.	Content of Set	Quantity
Adhesive set 08850-00070 [0 – 15°C (32 – 59°F)] 08850-00080 [15 – 35°C (59 – 95°F)] 08850-00090 [35 – 45°C (95 – 113°F)]	Main agent 500 g (17.64 oz.) Hardening agent 75 g (2.65 oz.) Primer G [for glass] 20 g (0.71 oz.) Primer M [for body] 20 g (0.71 oz.) Sponge for applying primer Piano wire 0.6 mm dia. x 1 m (0.024 in. dia. x 39.37 in.) Cartridge	1 can 1 ea. 1 ea. 1 ea. 2 ea. 1 ea. 1 set
Dam kit 04562-14010	Dam Double-stick tape (for sticking on dam)	
	Sealant gun (for applying adhesive) Glass or steel sheet (for mixing adhesive) Putty spatula (for mixing adhesive and correcting adhered parts) Solvent (Alcohol, lead-free gasoline – for cleaning adhering surfaces)	

Ambient temperature	Part No.	Part name
0 – 15°C (32 – 59°F)	08850-00070	Windshield glass adhesive set No. 15
15 – 35°C (59 – 95°F)	08850-00080	Windshield glass adhesive set No. 35
35 – 45°C (95 – 113°F)	08850-00090	Windshield glass adhesive set No. 45

1. CHOOSE AN ADHESIVE SET

Use a proper adhesive set depending upon the ambient temperature.

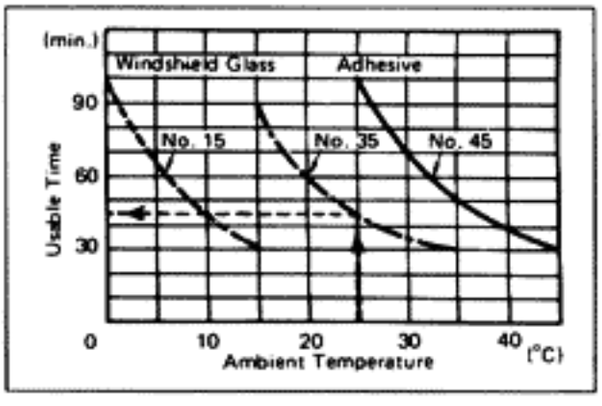

2. CHECK ADHESIVE USABLE TIME

After mixing the main and hardening agents, finish glass installation within the specified time as shown.

Example:

For glass installation in ambient temperature of 25°C (77°F), apply adhesive set No. 35 within 45 minutes.

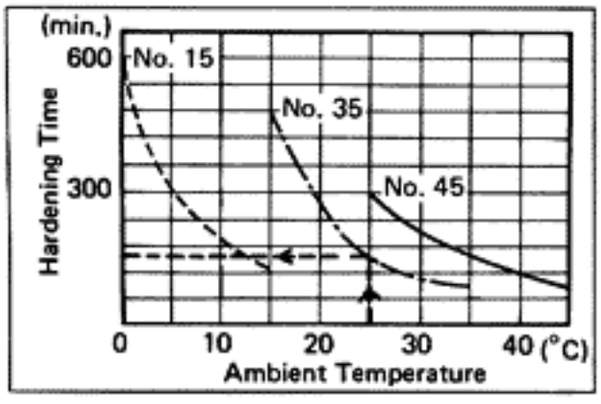

3. CHECK ADHESIVE HARDENING TIME

When the main and hardening agents are mixed, leak tests should be made only after the hardening time has elapsed.

Example:

Hardening time for adhesive set No. 35 with ambient temperature of 25°C (77°F) is 150 minutes.

CAUTION: Do not drive the vehicle until at least double the hardening time has elapsed.

COMPONENTS

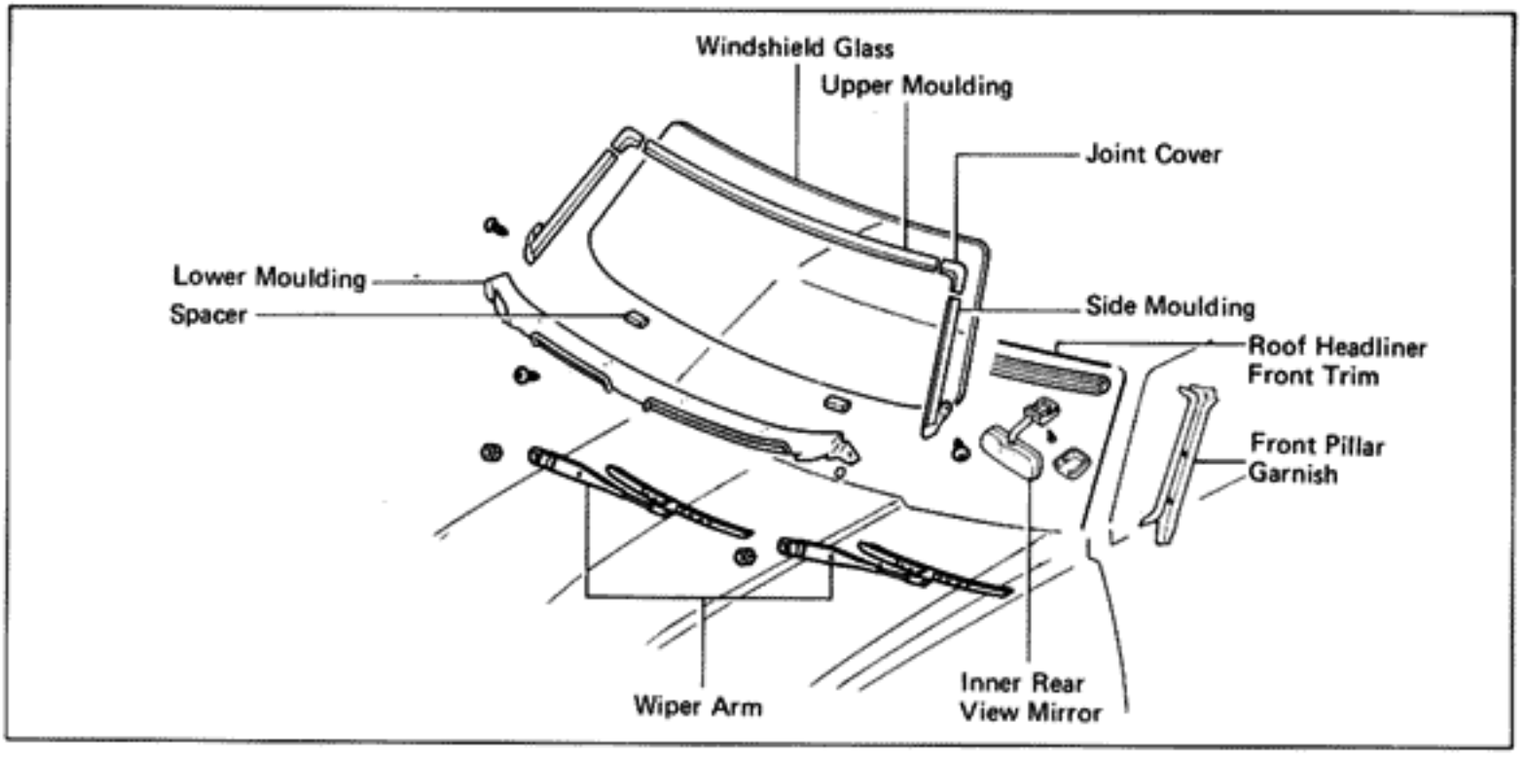

REMOVAL OF WINDSHIELD

1. REMOVE FRONT PILLAR GARNISH

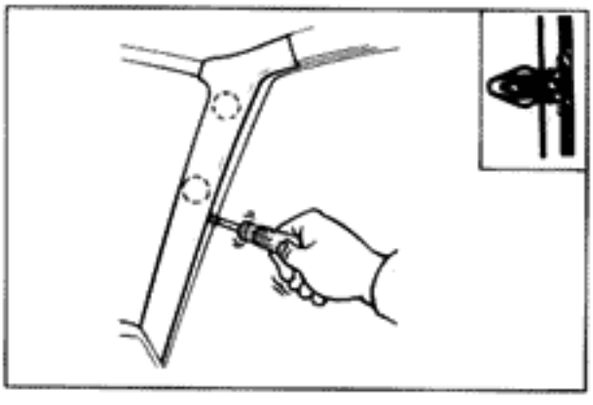

(a) Pry out the clips with a screwdriver.

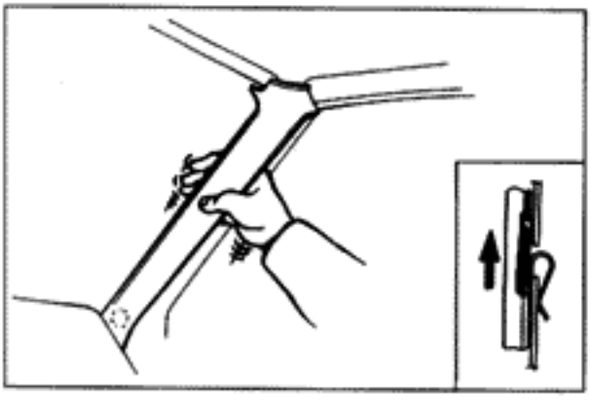

(b) Pull the garnish upward to remove it.

2. REMOVE FOLLOWING PARTS:
   (a) Inner rear view mirror
   (b) Roof headliner front trim
3. REMOVE WIPER ARM
4. REMOVE WINDSHIELD MOULDING (See page BO-12)

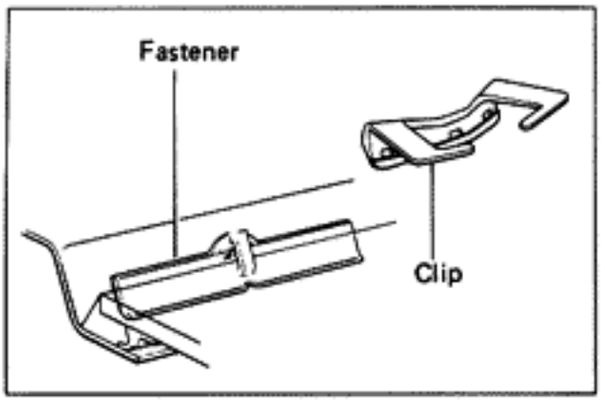

5. REMOVE CLIPS

Be careful not to damage the clips when removing them around the glass.

NOTE: Do not remove fasteners.
If any fastener is deformed, replace it.

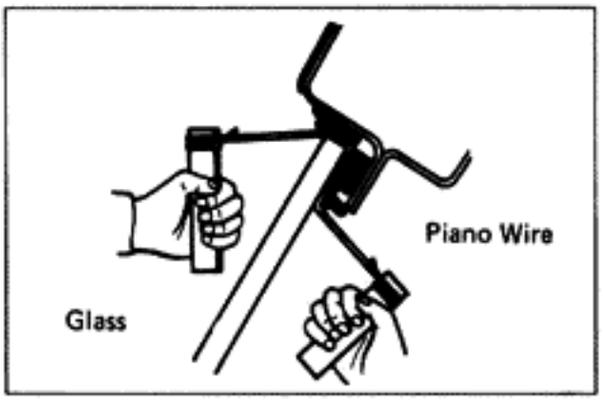

6. REMOVE WINDSHIELD GLASS

(a) Push piano wire through from the interior.

(b) Tie both wire ends to a wooden block or equivalent.

CAUTION: When separating, take care not to damage the paint and interior and exterior ornaments. To prevent scratching the safety pad when removing the windshield, place a plastic sheet between the piano wire and safety pad.

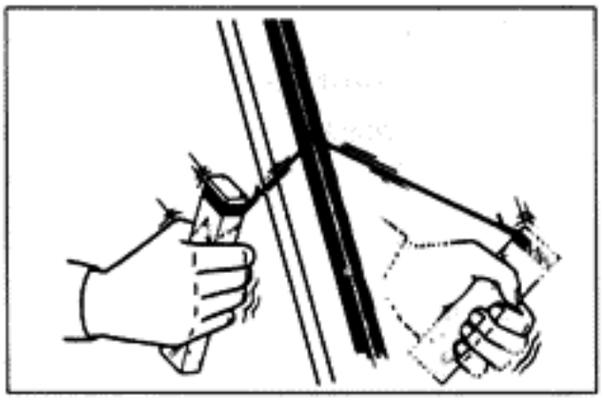

(c) Cut the adhesive by pulling the piano wire around it.

(d) Remove the glass.

CAUTION: Cut off the glass, leaving as much of the urethane layer on the body as possible.

INSPECTION AND CLEANING

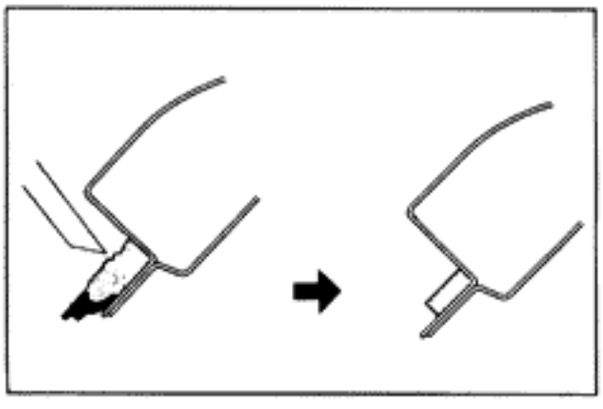

1. CLEAN CONTACT SURFACE OF BODY

(a) Remove any dam remaining on the body.

NOTE: Leave as much urethane layer on the body as possible.

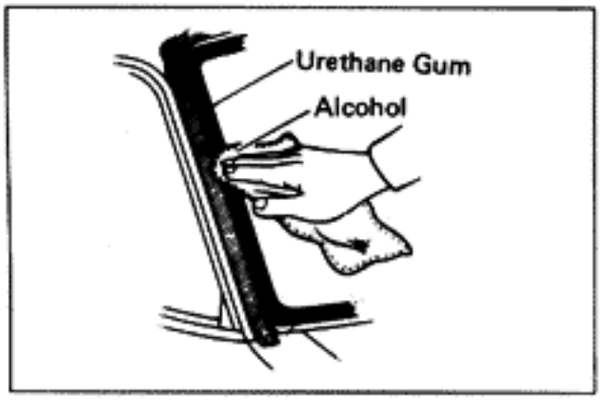

(b) Clean the cutting surface of the urethane gum with a piece of cloth saturated in solvent (alcohol).

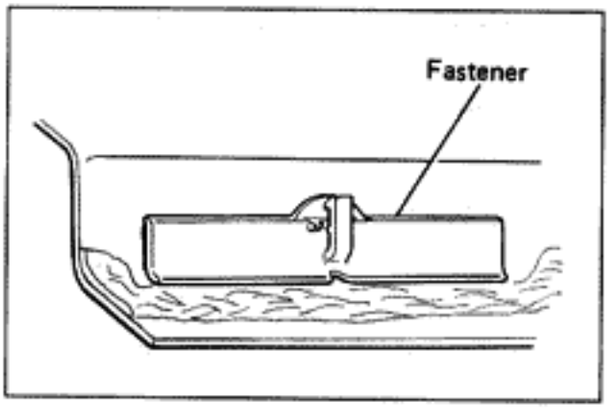

2. IF FASTENERS ARE DAMAGED

(a) Remove any damaged fastener.

(b) Cut the old adhesive off around the fastener installation area.

(c) Install a new fastener.

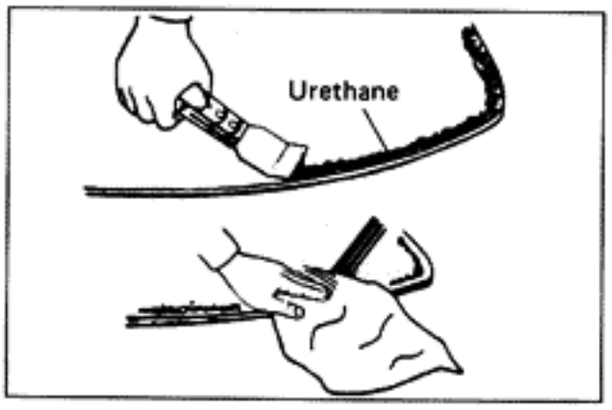

3. CLEAN REMOVED GLASS BEFORE INSTALLATION

(a) Using a scraper, remove the urethane gum sticking to the glass.

(b) Clean the glass with alcohol.

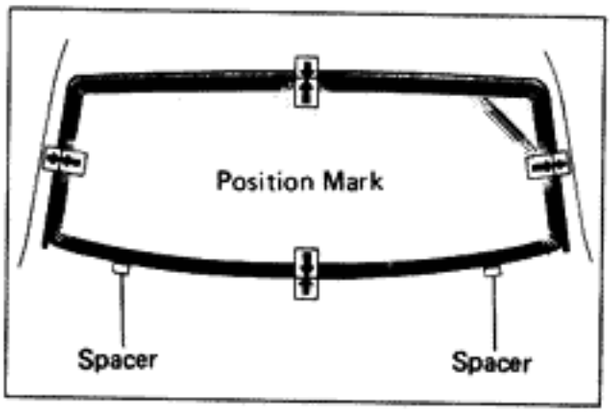

4. POSITION GLASS

(a) Replace rubber spacers, if broken.

(b) Place the glass in correct position onto rubber spacers.

(c) Check that all contacting parts of the glass rim are perfectly even and do not make contact with the retaining clips.

(d) Make reference marks between the glass and body.

(e) Remove the glass.

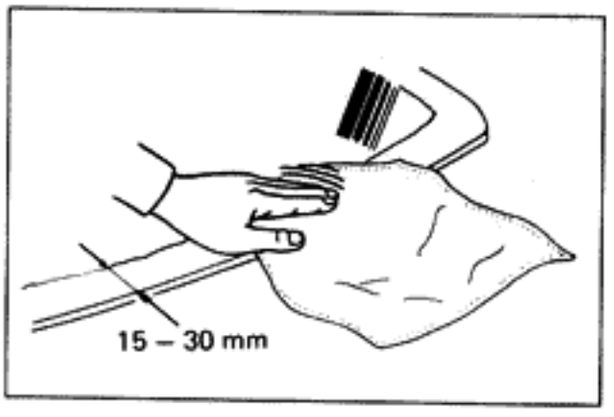

5. CLEAN CONTACT SURFACE OF GLASS

Using alcohol or similar solvent, clean contact surface 15 – 30 mm (0.59 – 1.18 in.) wide around the entire glass rim.

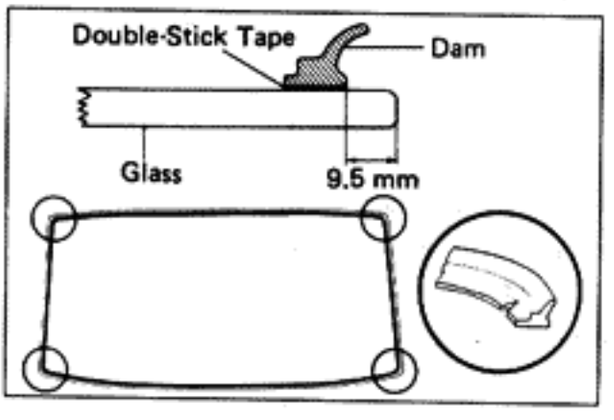

INSTALLATION OF WINDSHIELD

1. INSTALL DAM

(a) Apply double-stick tape at a point 9.5 mm (0.37 in.) from the glass rim.

(b) Place the dam on the double-stick tape.

NOTE: Cut a V-wedge into the corner folds of the dam.

CAUTION: Do not touch the glass face after cleaning it.

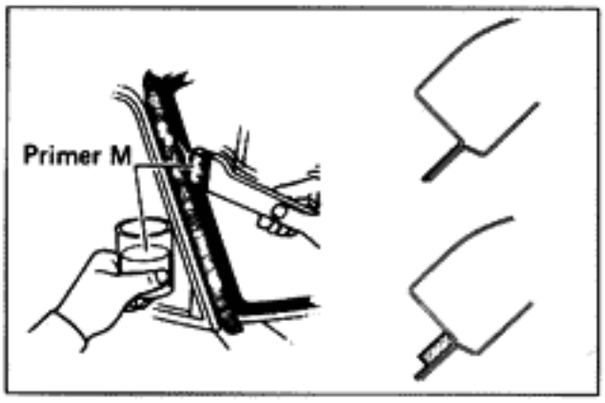

2. COAT CONTACT SURFACE OF BODY WITH PRIMER "M"

Using a brush, coat the contact surface of the body with Primer M.

CAUTION:

- Let the primer coating dry for 10 minutes or more. Make sure that the installation of the glass is finished within 2 hours.
- Use care not to leave any part of the contact surface uncoated or excessively coated, as Primer M and G serve to boost the adhesive power of urethane to glass or body.
- Do not keep any of the opened Primer M and G for later use.

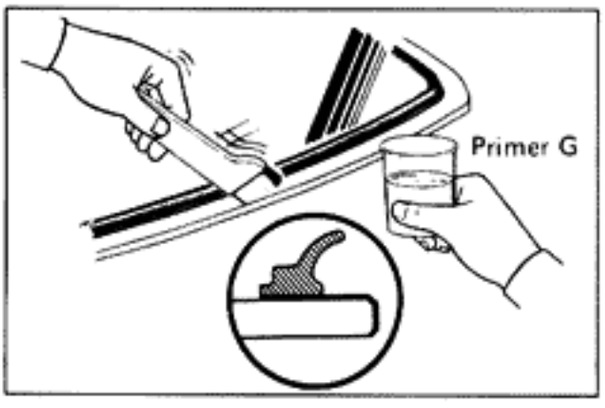

3. COAT CONTACT SURFACE OF GLASS WITH PRIMER "G"

(a) Using a brush or sponge, coat the edge of the glass and the contact surface with Primer G.

(b) Before the primer dries, wipe any excess off with a clean cloth to avoid too thick a coat.



4. MIX ADHESIVE COATING

CAUTION:

- Be sure that installation of the glass is finished within usable time. (See step 2 on page BO-22)
- Mixture should be made in 5 minutes or less.

(a) Thoroughly clean a glass plate or such and putty spatula with solvent.

(b) Thoroughly mix the main agent 500g (17.64 oz.) and hardening 75g (2.65 oz.) on the glass plate or such with a putty spatula.

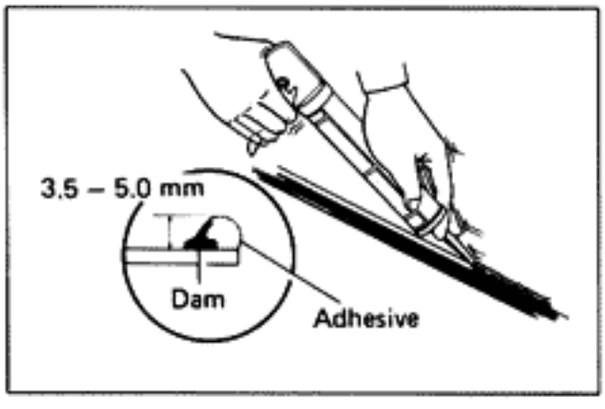

5. APPLY ADHESIVE

(a) Cut off the tip of the cartridge nozzle to make a hole 5 mm (0.20 in.) in diameter. Fill the cartridge with adhesive.

(b) Load the cartridge into the sealer gun.

(c) Coat the glass with adhesive on all contact surfaces along the ridge.

Adhesive height:

If adhesive remains on body: 3.5 – 5.0 mm (0.138 – 0.197 in.)

If no adhesive remains on body: 8 – 10 mm (0.31 – 0.40 in.)

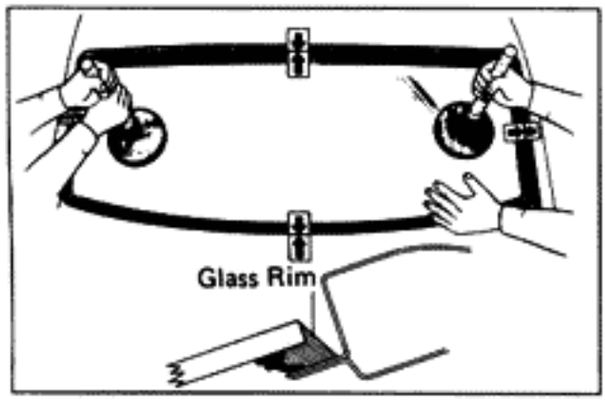

6. INSTALL GLASS

(a) Position the glass so that reference marks are lined up and press in gently along the rim.

(b) Using a spatula, apply adhesive on the glass rim.

(c) Use a spatula to remove any excess or protruding adhesive.

(d) Fasten glass securely until the adhesive sets.

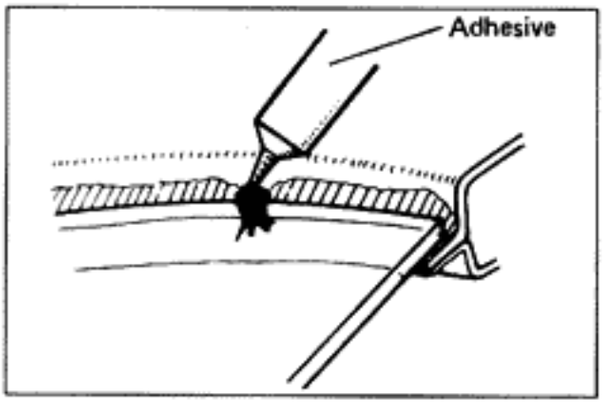

7. INSPECT FOR LEAKS AND REPAIR

(a) Perform a leak test after hardening time has elapsed.

(b) Seal any leak with adhesive or auto glass sealer.

Part No. 08833-00030 or equivalent

CAUTION: Wait at least twice the hardening time before driving the car.

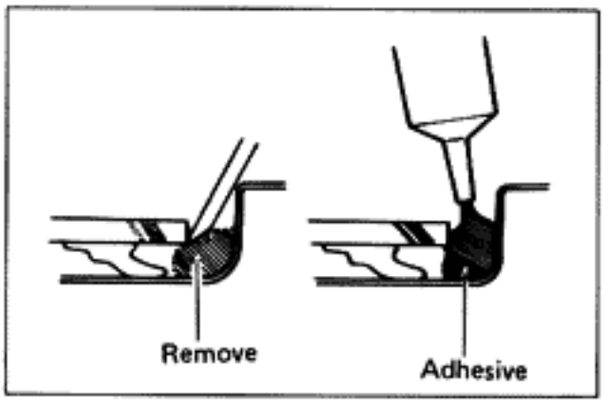

8. CONNECT RADIO ANTENNA CONNECTOR

9. INSTALL OUTSIDE MOULDING

(a) Using a knife, remove the adhesive around the installation area of the clips.

(b) Apply adhesive at the installation area of the clips.

NOTE: Loosely install the clip and confirm that the clip arm is not protruding above the surface.

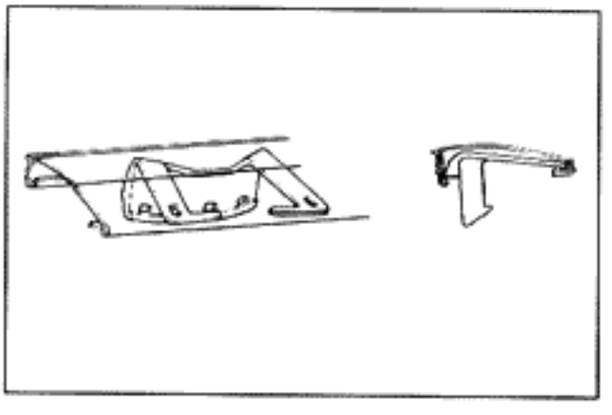

(c) Install the clips into the moulding.
When installing the moulding, be sure that the clips and fasteners on the body side do not make contact.

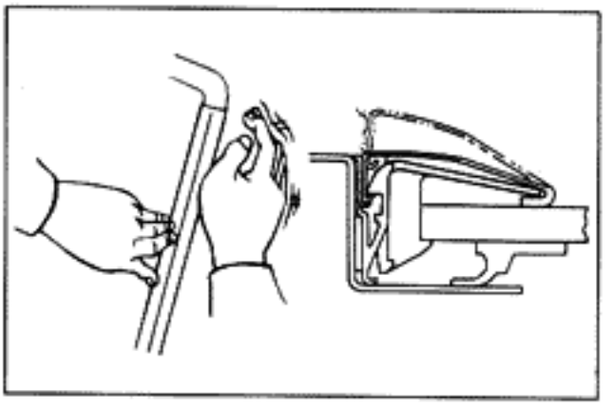

(d) Install the outside moulding.
- Install lower moulding.
- Fit on the upper moulding and tap by hand to fasten the fasteners.
- Install the side moulding and slide down the moulding.
- Install the corner joint moulding.

10. INSTALL FOLLOWING PARTS:

(a) Roof headliner front trim

(b) Inner rear view mirror

11. INSTALL WIPER ARM

12. INSTALL FRONT PILLAR GARNISH

QUARTER WINDOW GLASS

COMPONENTS

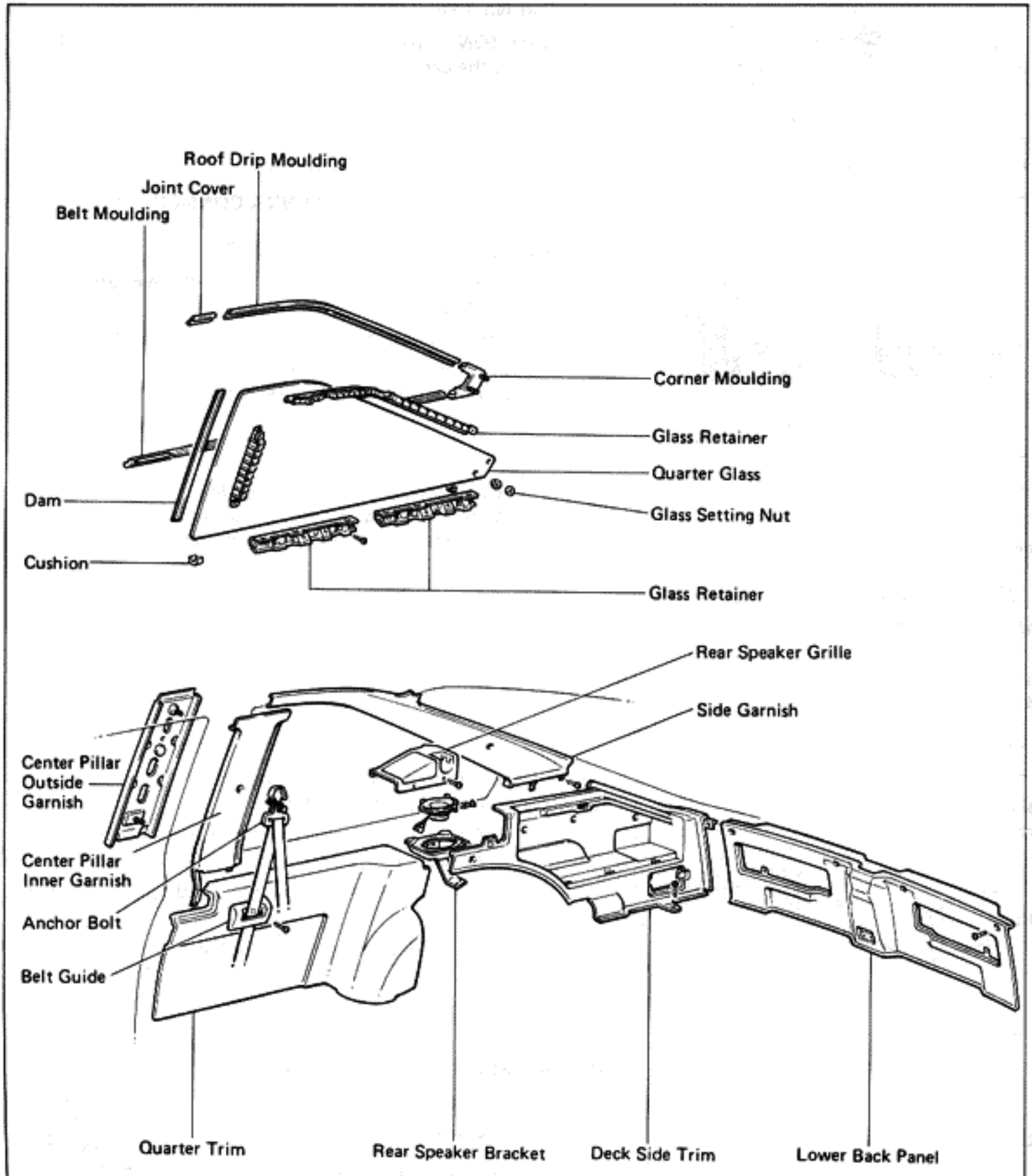

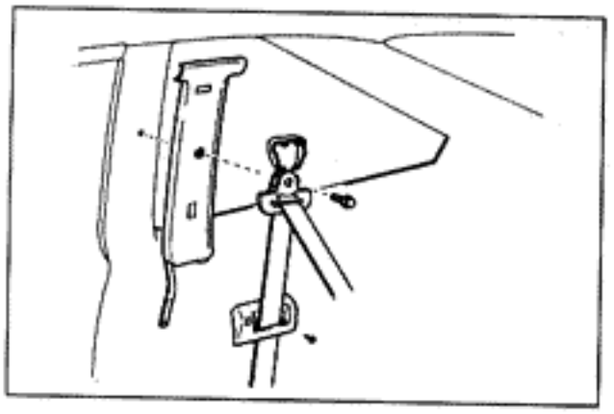

REMOVAL OF QUARTER WINDOW GLASS

1. REMOVE SEAT BELT SHOULDER BELT ANCHOR
   (a) Remove the anchor cover.
   (b) Remove the anchor bolt.

2. REMOVE BELT GUIDE
   (a) Remove the screw.
   (b) Pry loose one clip with a screwdriver and remove the belt guide.

3. REMOVE CENTER PILLAR INNER GARNISH
   Pry loose two clips with a screwdriver and remove the garnish.

4. REMOVE LOWER BACK PANEL COVER

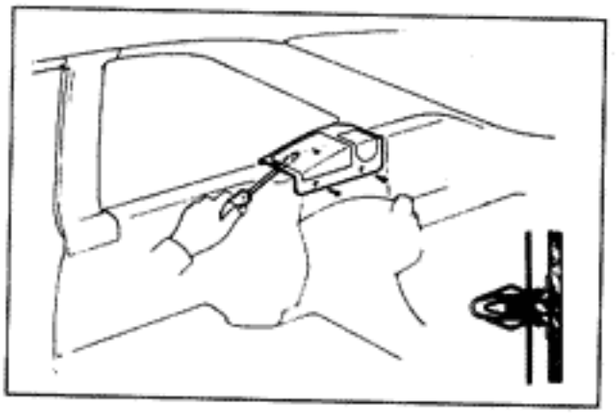

5. REMOVE REAR SPEAKER GRILLE
   (a) Remove the screws.
   (b) Pry loose two clips with a screwdriver and remove the grille.

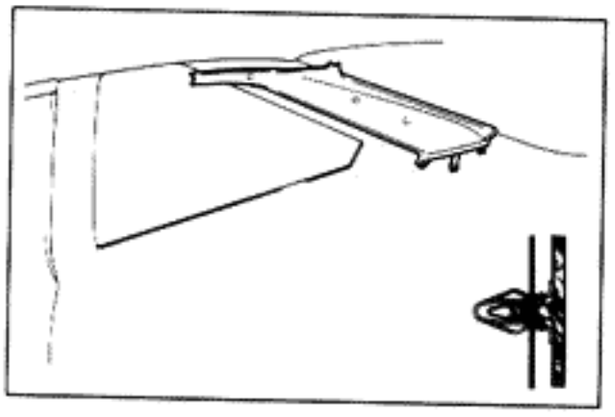

6. REMOVE DECK SIDE TRIM AND SIDE GARNISH
   (a) Remove the deck side trim.
   (b) Pry loose three clips with a screwdriver and remove the side garnish.

7. REMOVE REAR SPEAKER AND BRACKET

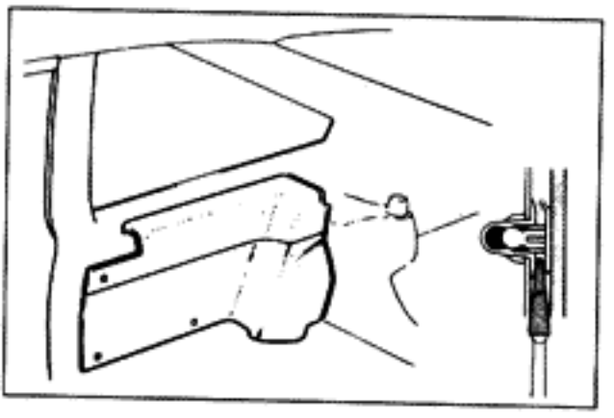

8. REMOVE QUARTER TRIM
   (a) Pry loose three clips with a screwdriver.
   (b) Pull loose two retainers and remove the quarter trim.

9. REMOVE FOLLOWING PARTS:

(a) Joint cover
(b) Roof drip moulding
(c) Quarter window belt moulding
(d) Corner moulding
(e) Center pillar garnish

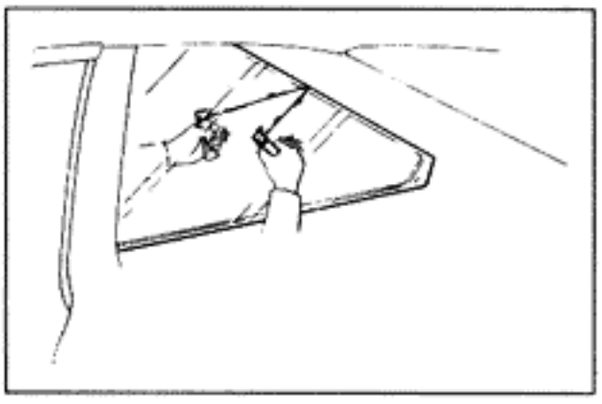

10. REMOVE QUARTER WINDOW GLASS

(a) Remove the glass retainers.
(b) Remove the glass set screws.
(c) Push piano wire through from the interior.
(d) Tie both wire ends to a wooden block.
(e) Separate the glass by pulling the piano wire around it. Remove the glass.

INSTALLATION OF QUARTER WINDOW GLASS

1. PREPARE ITEMS LISTED

Part Name and Part No.	Content of Set
Butyl tape set (08850 – 00065)	Butyl tape 9 mm dia. x 150 mm (0.35 x 5.91 in.) Primer 5 cc (0.17 fl. oz.) Sponge (for applying primer) Piano wire 1 mm dia. x 600 mm (0.04 x 23.62 in.) (for slicing off glass)
Dam kit (04681 – 12010)	Dam Double-stick tape (for sticking on dam)
Materials required	Solvent (Alcohol, unleaded gasoline) (for cleaning adhering surfaces)

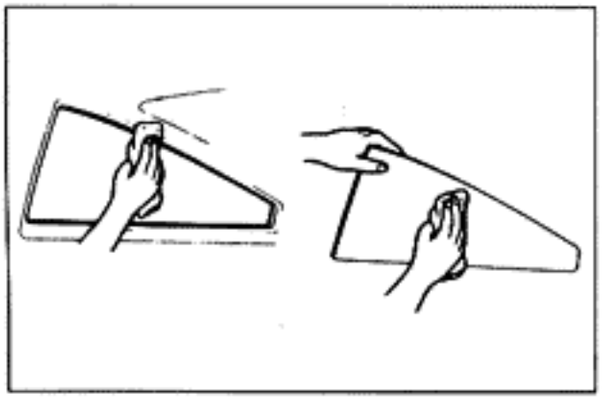

2. CLEAN BODY AND GLASS

Wipe off any adhesive left on body and glass with alcohol or unleaded gasoline.

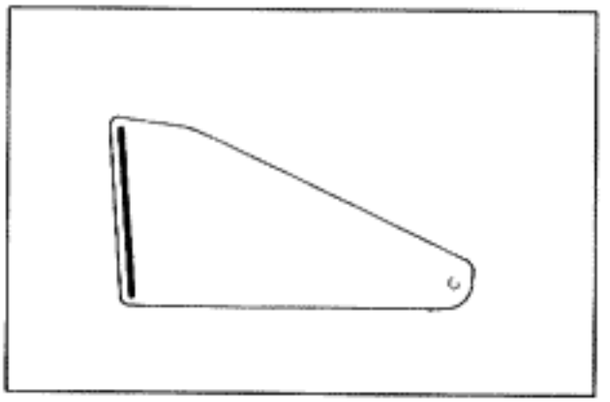

3. INSTALL DAM

(a) Apply double-stick tape at a point 12 mm (0.47 in.) from the glass rim.

(b) Place dam on the double-stick tape.

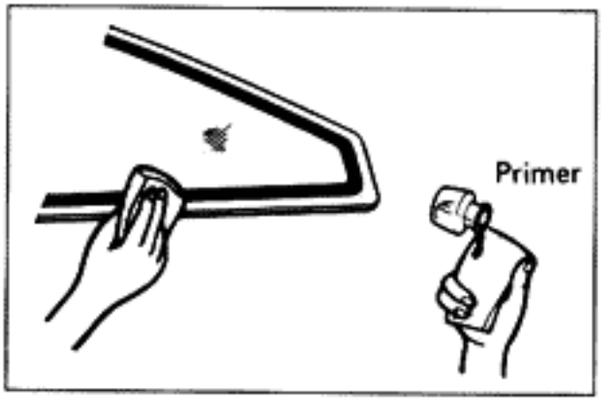

4. COAT CONTACT SURFACE OF GLASS WITH PRIMER

(a) Using a sponge, coat the glass adhering surface with primer.

(b) Let the primer coating dry for 10 minutes.

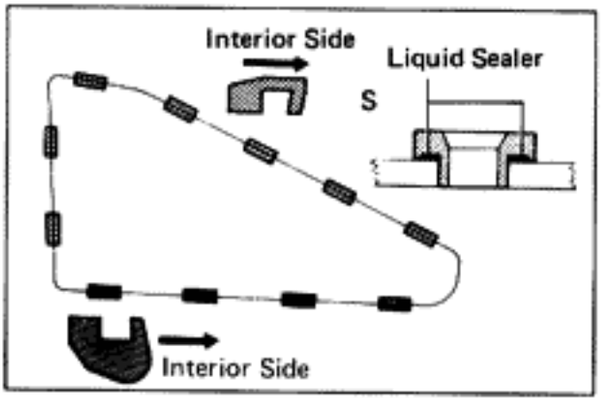

5. INSTALL GLASS

(a) Attach the cushions around the glass.

NOTE: Install the cushions facing as shown.

(b) Coat the spacer with liquid sealer.

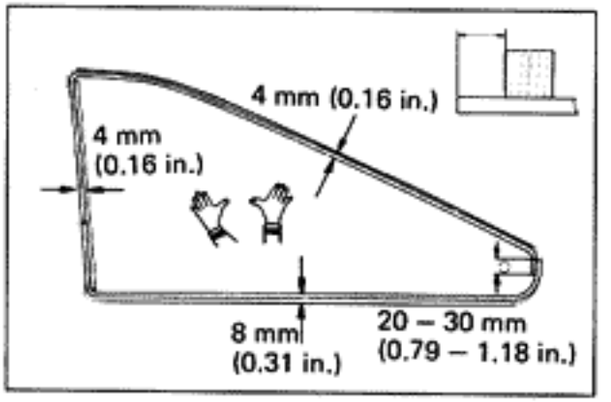

(c) Apply butyl tape on the glass.

(d) Tape over 20 mm (0.79 in.) of the rear area.

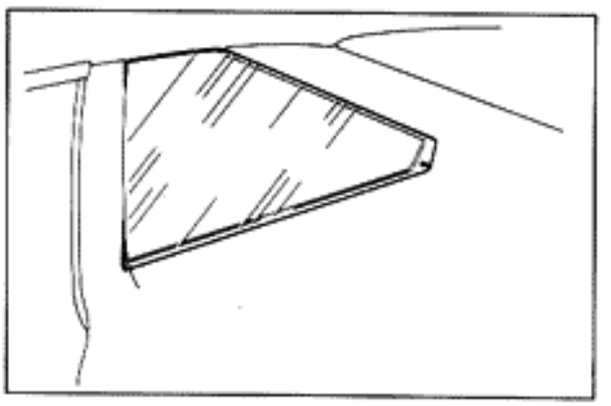

(e) Align the hole of rear area with the glass and body when installing the glass onto the body.

(f) To seat the glass, tap from the inside with the palm of your hand.

(g) Install the glass retainers around the glass.

6. **INSTALL FOLLOWING PARTS:**
   (a) Center pillar garnish
   (b) Corner moulding
   (c) Quarter window belt moulding
   (d) Roof drip moulding
   (e) Joint cover

7. **INSTALL QUARTER TRIM**

8. **INSTALL REAR SPEAKER AND BRACKET**

9. **INSTALL SIDE GARNISH AND DECK SIDE TRIM**

10. **INSTALL REAR SPEAKER GRILLE**

11. **INSTALL LOWER BACK PANEL COVER**

12. **INSTALL CENTER PILLAR INNER GARNISH**

13. **INSTALL BELT GUIDE**

14. **INSTALL SEAT BELT SHOULDER BELT ANCHOR**

BACK DOOR GLASS

COMPONENTS

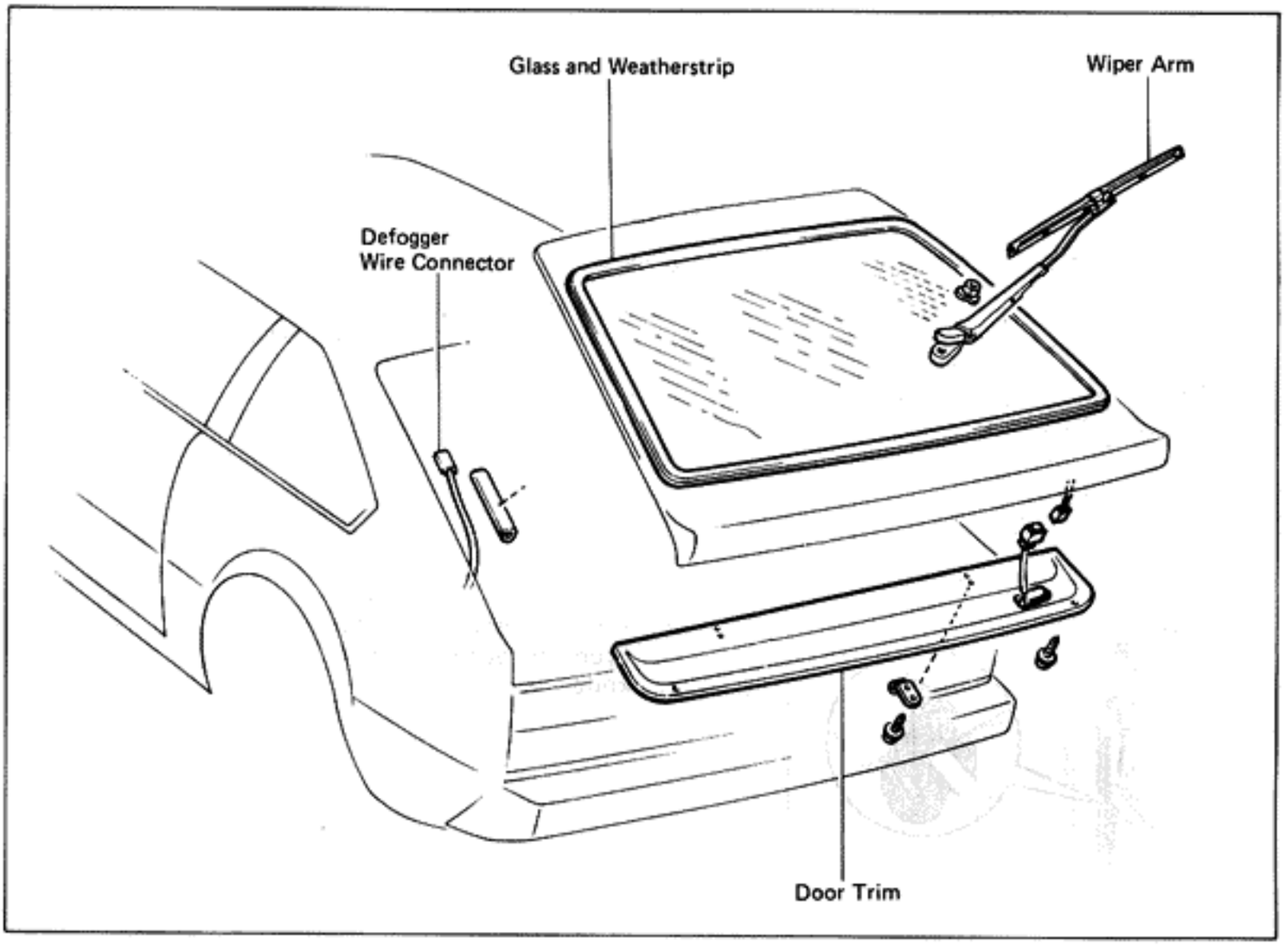

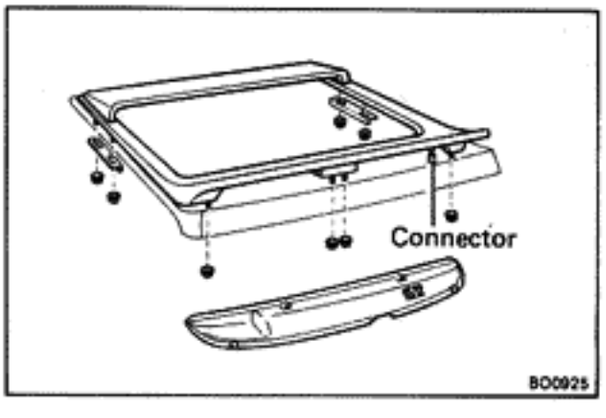

REMOVAL OF BACK DOOR GLASS

1. REMOVE REAR SPOILER
   (a) Remove the back door trim.
   (b) Remove the eight nuts.
   (c) Disconnect the high mount stop light wire connector.

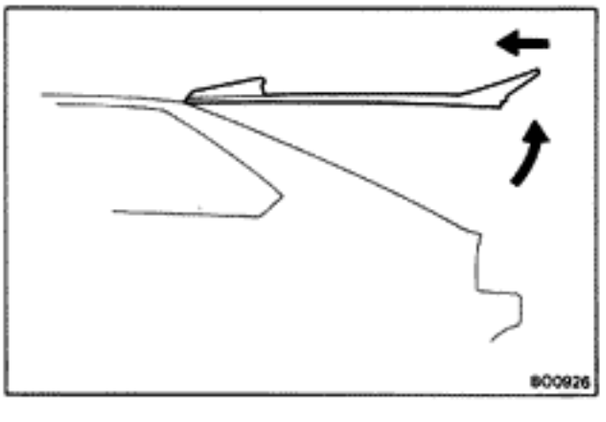

   (d) Lift up the rear end of the spoiler, slide it toward the front, and remove it.
   (e) Remove the four clips from the spoiler.

2. **REMOVE FOLLOWING PARTS:**
   (a) Rear wiper arm
   (b) Window defogger wire connector

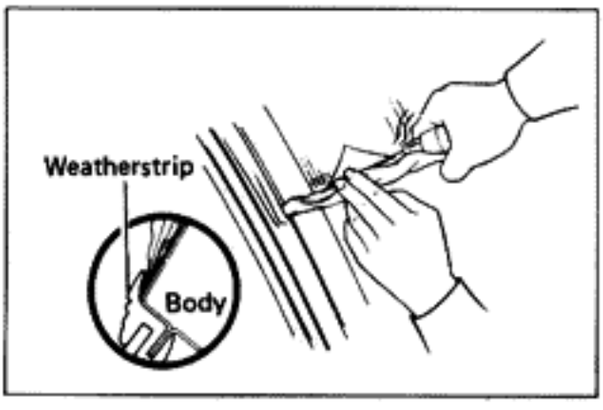

3. **REMOVE GLASS**
   (a) **If reusing the weatherstrip:**
   Working from the vehicle outside with a screwdriver, loosen the weatherstrip lip from the body.

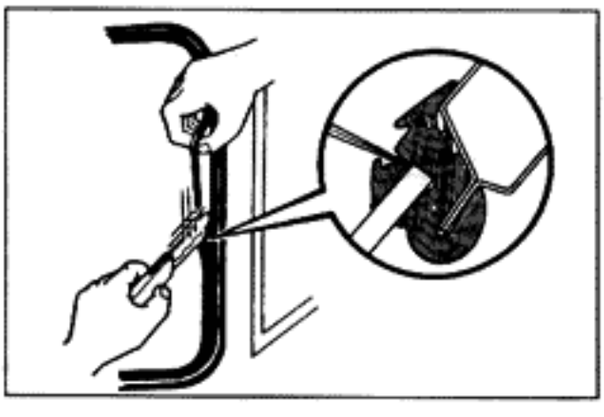

(b) **If not reusing the weatherstrip:**
From the outside, cut off the weatherstrip lip with a knife.

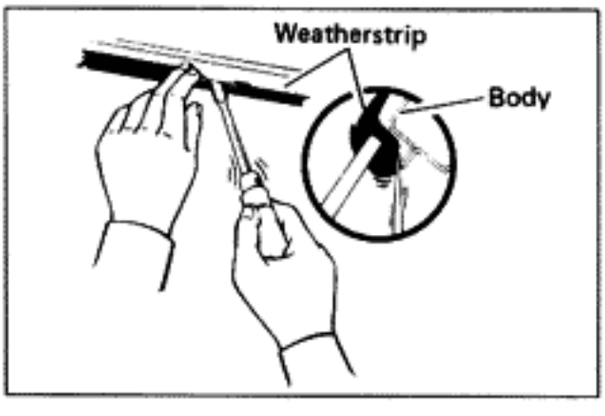

(c) Force the weatherstrip lip from the interior to the body flange outside. Pull the glass outwards and remove it with the weatherstrip.

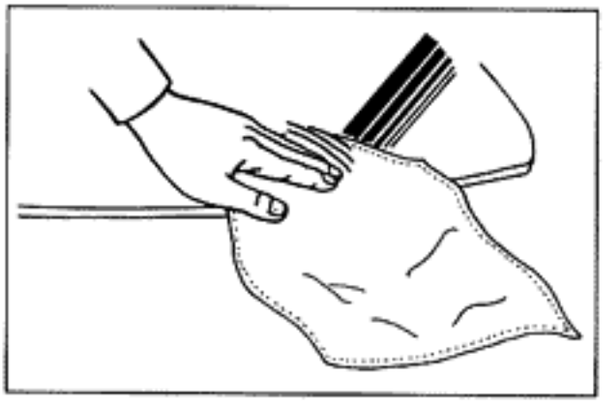

INSTALLATION OF REAR WINDOW

1. CLEAN BODY AND GLASS

Wipe off any adhesive left on the body or glass with alcohol.

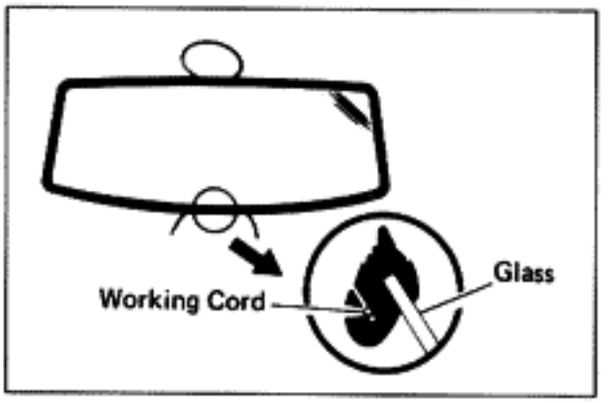

2. INSTALL WEATHERSTRIP ON GLASS

(a) Attach the weatherstrip to the glass.

CAUTION: If the weatherstrip has hardened, it may develop water leaks. Use a new one if possible.

(b) Apply a working cord along the weatherstrip groove as shown.

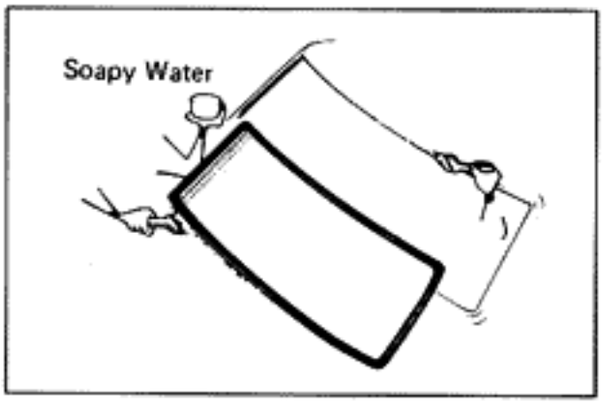

3. INSTALL GLASS

(a) Apply soapy water to the contact face of the weatherstrip lip and to the body flange.

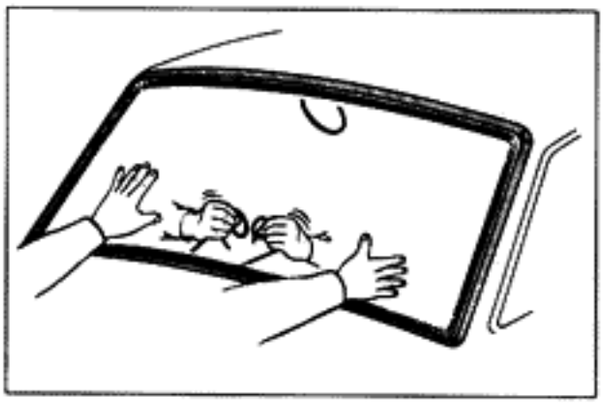

NOTE: Begin installation in the middle of the lower part of the glass.

(b) Hold the glass in position on the body.

(c) Install the glass by pulling the working cord from the interior, while pushing the outside of the weatherstrip with your open hand.

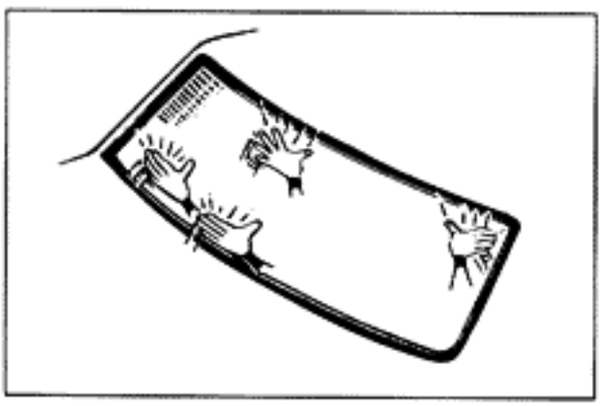

(d) To snug the glass in place, tap from the outside with your open hand.

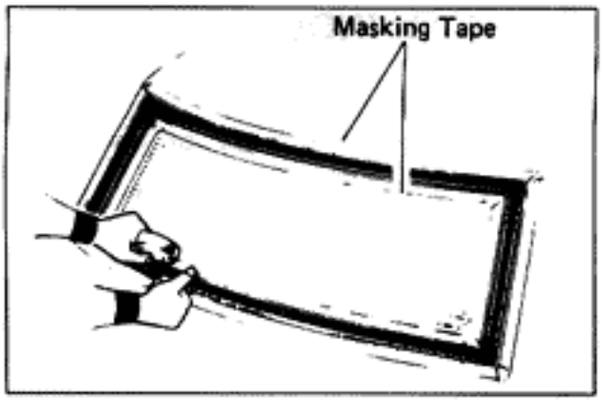

4. APPLY ADHESIVE

(a) Put masking tape around the weatherstrip to protect the paint and glass.

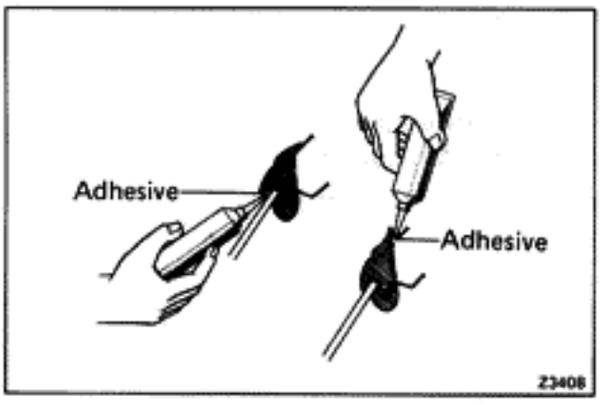

(b) Apply adhesive between the weatherstrip and glass and between the weatherstrip and body.

Part No. 08833-00030 or equivalent

NOTE: When adhesive is dry, remove the masking tape.

5. INSTALL FOLLOWING PARTS:

(a) Window defogger wire connector

(b) Rear wiper arm

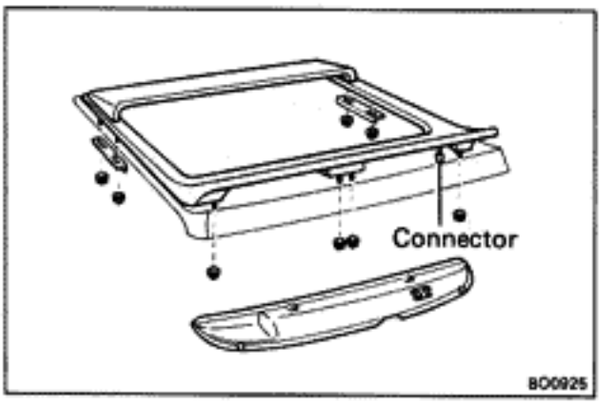

6. INSTALL REAR SPOILER

(a) Install the four clips to the spoiler.

(b) Install the spoiler to the back door.

(c) Connect the high mount stop light wire connector.

(d) Tighten the eight nuts.

(e) Install the back door trim.

SUN ROOF

COMPONENTS

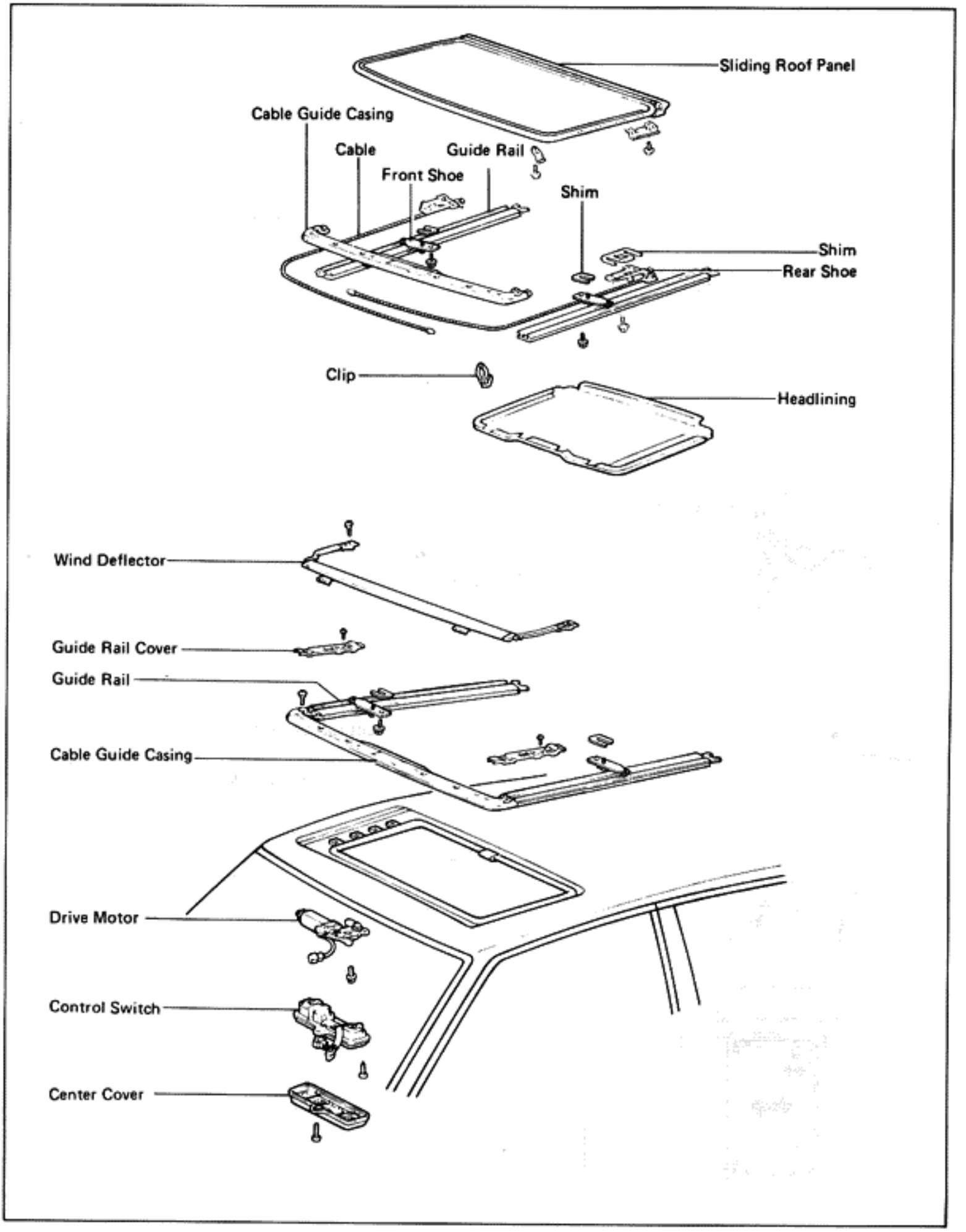

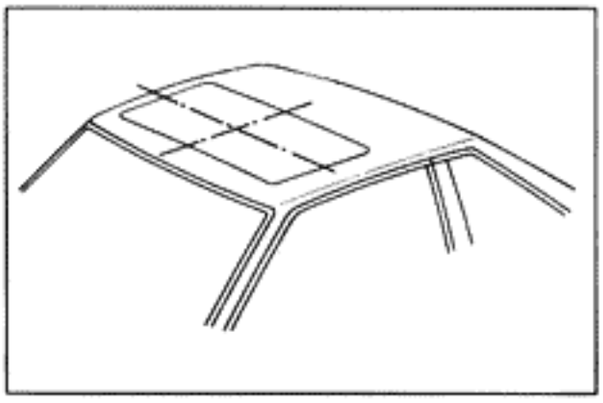

ON-VEHICLE INSPECTION

(a) Start the engine and check the operation time of the sun roof.

Operation time: Approx. 5 secs.

(b) Check for abnormal noise or binding during operation.

(c) With sun roof fully closed, check for water leakage.

(d) Check for a level difference between the sliding panel and roof panel.

Front side: $0^{+1.0}_{-2.0}$ mm ($0^{+0.039}_{-0.079}$ in.)

Rear side: $0^{+1.0}_{-2.0}$ mm ($0^{+0.039}_{-0.079}$ in.)

Left and right side: $0^{+1.0}_{-2.0}$ mm ($0^{+0.039}_{-0.079}$ in.)

(e) If the sliding roof does not operate:

(1) Remove the cover of the control box.

(2) Remove the screw inside.

(3) Manually operate the sun roof by inserting a large screwdriver into the hole and turning the drive shaft.

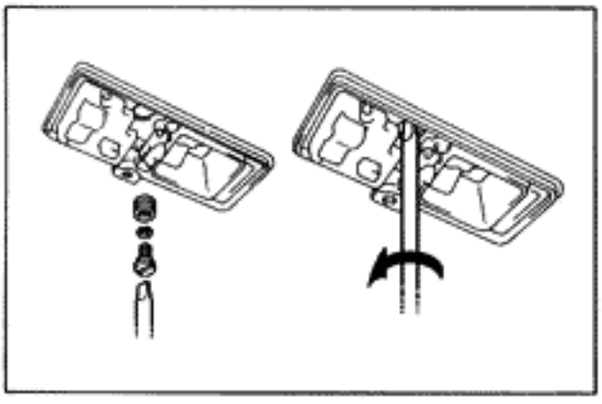

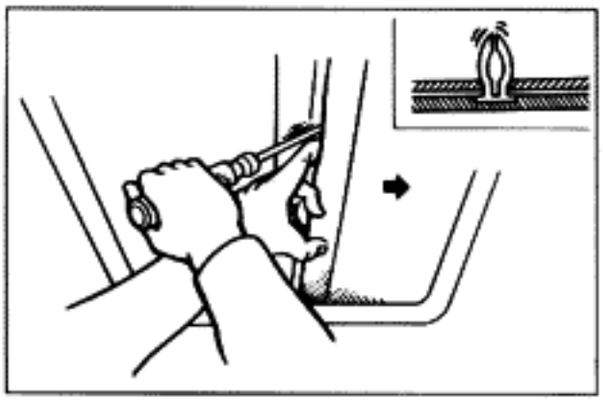

ADJUSTMENT OF SLIDING ROOF

(a) Before making adjustments, pull loose the clips and slide the headlining to the rear.

NOTE: When checking adjustment, reattach the headlining before sliding the roof.

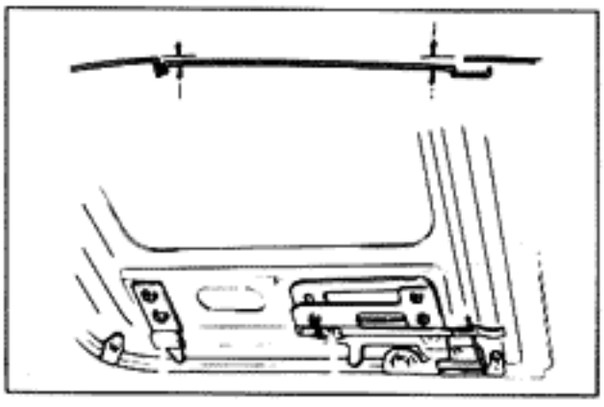

(b) Vertical direction of sliding roof front end and rear end.

Adjust by increasing or decreasing the number of shims.

NOTE: If the front end is high, even without a shoe shims, check to see if the front shoes are in contact with the stoppers.

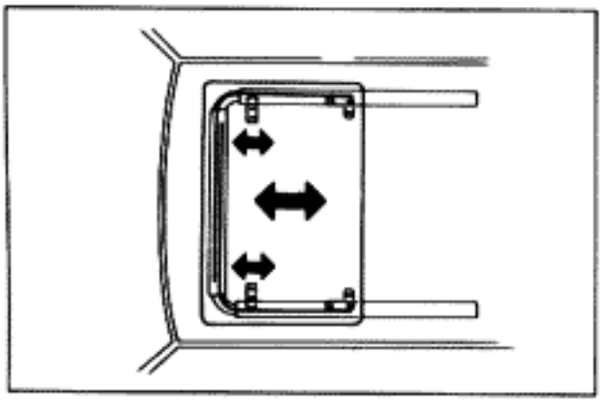

(c) Forward–rearward direction

Adjust by moving the front shoe on both sides.

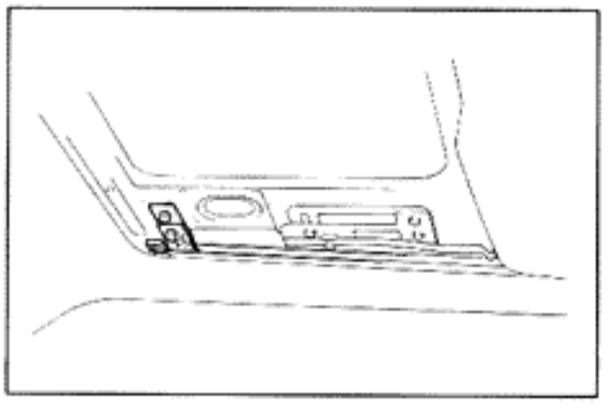

NOTE: When the sliding roof is fully closed, confirm that the front shoes are in contact with the stopper.

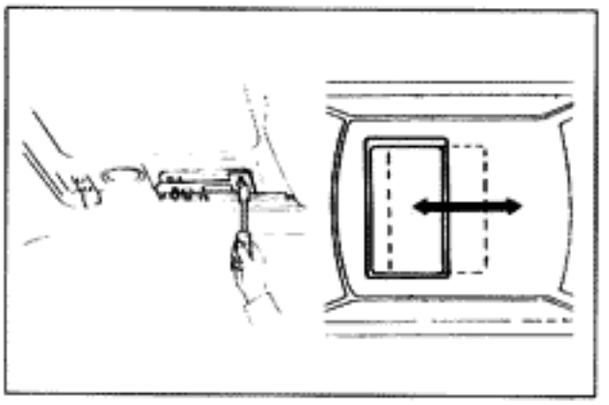

(d) Left–right direction

Adjust by loosening the rear shoe bolts and sliding the roof forward and rearward.
It will adjust automatically.

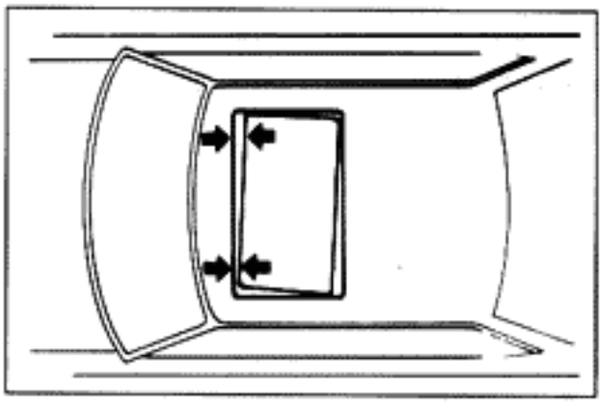

(e) In event the sliding roof is tilted.
(Difference in the left and right front clearance)

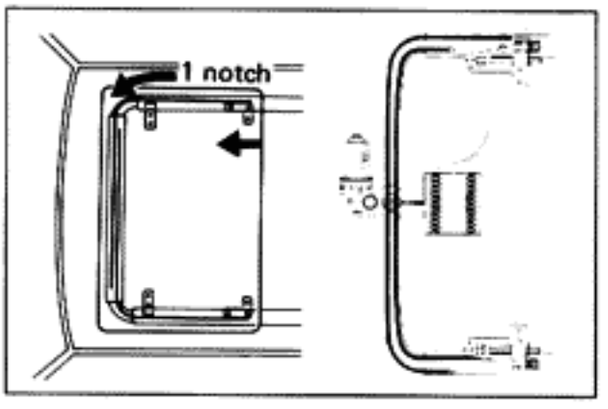

- If the difference is about 2 mm (0.08 in.):
  Remove the drive motor and shift the cable one notch on the side with larger clearance.
  Reinstall the motor.

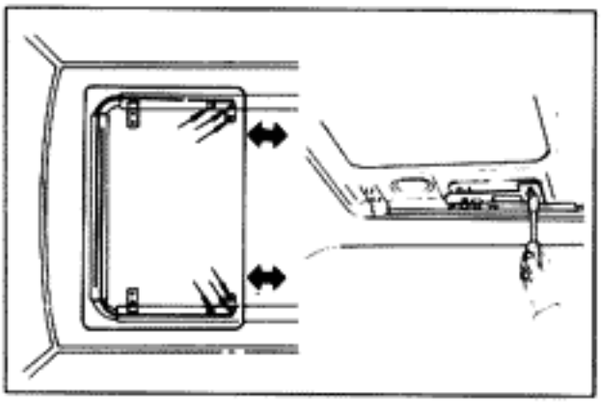

- If the difference is about 1 mm (0.04 in.):
  Loosen the rear shoe bolts and readjust the sliding roof to the proper position.

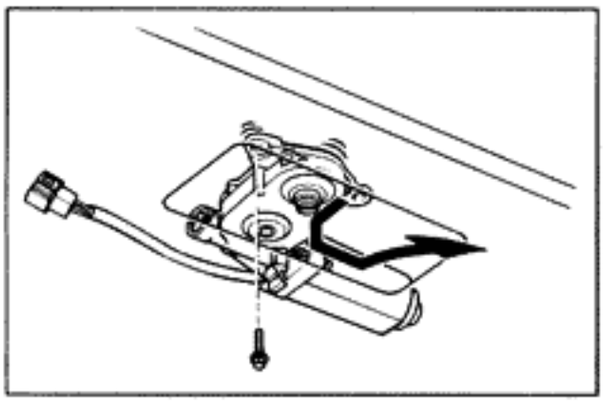

REMOVAL OF SUN ROOF

1. DISCONNECT BATTERY CABLE FROM NEGATIVE TERMINAL
2. REMOVE CENTER COVER OF CONTROL BOX
3. REMOVE CONTROL SWITCH
4. REMOVE DRIVE MOTOR THROUGH SERVICE HOLE

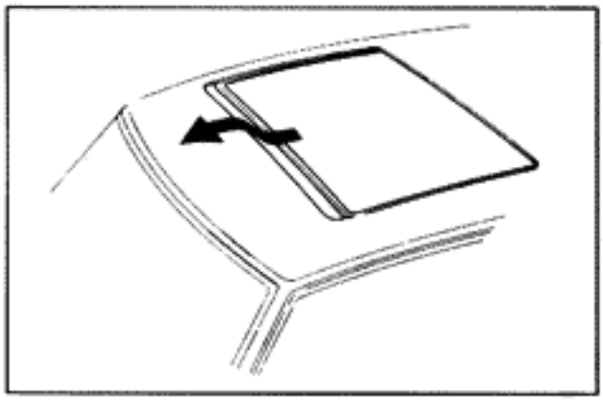

5. REMOVE WIND DEFLECTOR
6. REMOVE GUIDE RAIL COVER
7. REMOVE SLIDING ROOF AND GUIDE RAIL
   (a) Apply adhesive tape to protect the body.
   (b) Pull the sliding roof with the guide rail upward and forward to remove.

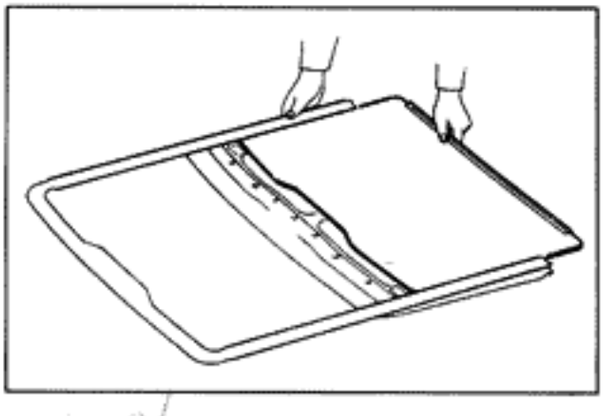

DISASSEMBLY OF SUN ROOF

1. REMOVE SLIDING ROOF HEADLINING
   (a) Pry off the clip.
   (b) Pull the sliding roof headlining rearward to remove.

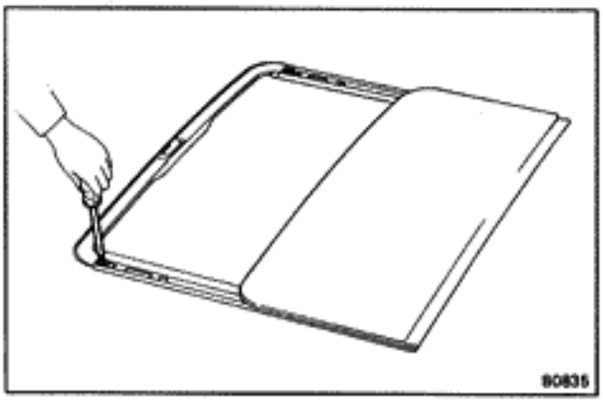

2. REMOVE GUIDE RAIL AND CABLE GUIDE CASING
   (a) Loosen the screw.
   (b) Pull the guide rail rearward to remove.
   (c) Pull the cable guide casing forward to remove.

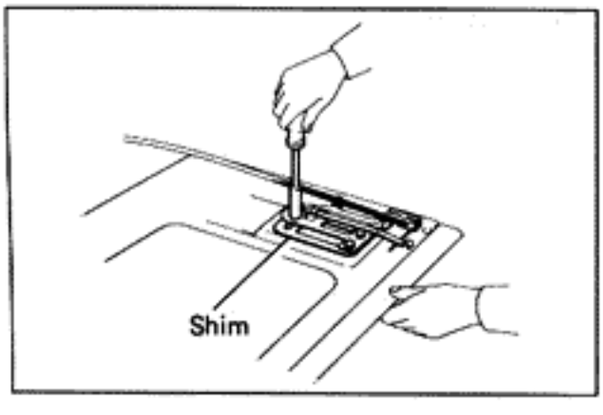

3. NOTE NUMBER OF SHIMS ON FRONT AND REAR
4. REMOVE FRONT SHOE
5. REMOVE DRIVE CABLE AND REAR SHOE
6. REMOVE DRIVE CABLES FROM CABLE GUIDE CASING

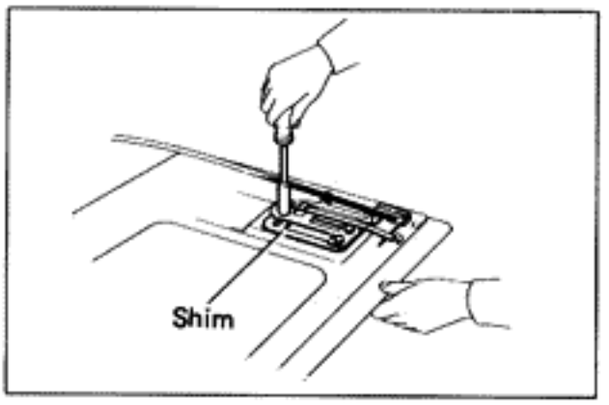

ASSEMBLY OF SUN ROOF

1. APPLY MP GREASE TO DRIVE CABLE
2. PLACE DRIVE CABLES INTO GUIDE CASING
3. INSTALL FRONT AND REAR SHOES ONTO ROOF PANEL

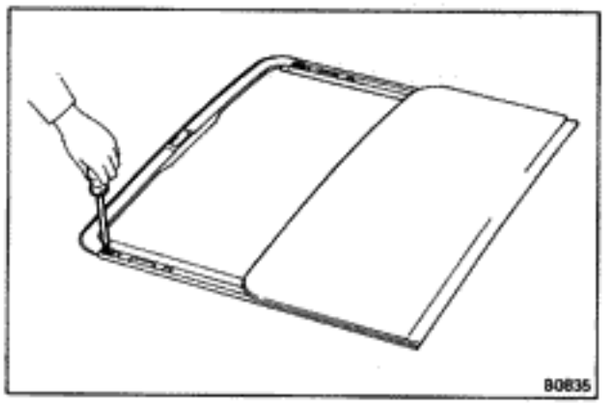

4. INSTALL GUIDE RAILS ON BOTH SIDES
   (a) Install both side guide rails through the rear and front shoes.
   (b) Install the guide rail and guide casing with the screws.

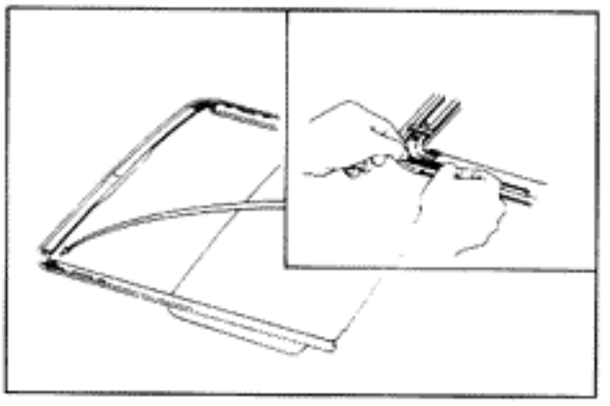

   (c) Use butyl tape to cover the cut portion of the weatherstrip at the connection between the guide case and guide rail.

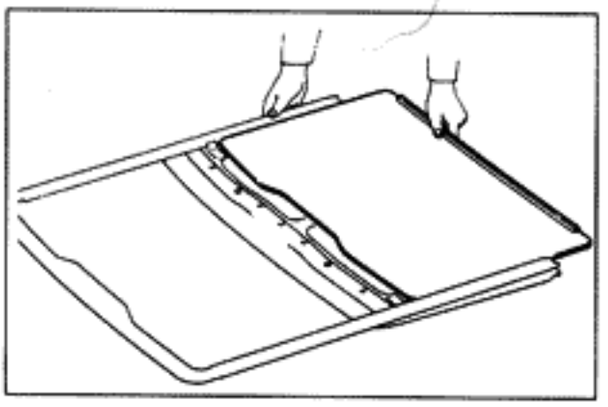

5. ASSEMBLE SLIDING ROOF HEADLINING
   (a) Run the headlining through the guide rail.
   (b) Do not clip the headlining.

   NOTE: Secure the headlining for adjustment after assembly.

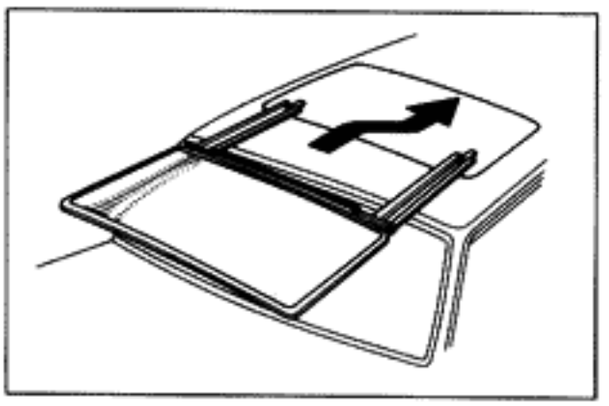

INSTALLATION OF SUN ROOF

1. INSTALL SLIDING ROOF WITH GUIDE RAIL ONTO ROOF
   (a) Install the sliding roof assembly onto the roof.
   (b) Tighten the guide rail and cover with the screws.
2. INSTALL WIND DEFLECTOR

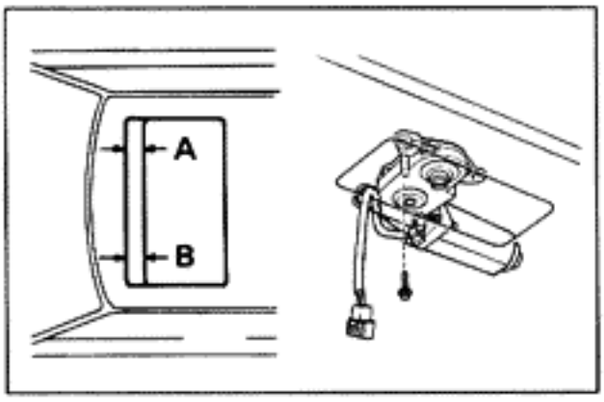

3. INSTALL DRIVE MOTOR

(a) Move the sliding roof by hand so the clearance between the left and right of the sliding roof and body are equal.

(b) Install the drive motor into the roof.

(c) Install the center cover of control box.

4. ADJUST SLIDING ROOF OPERATION

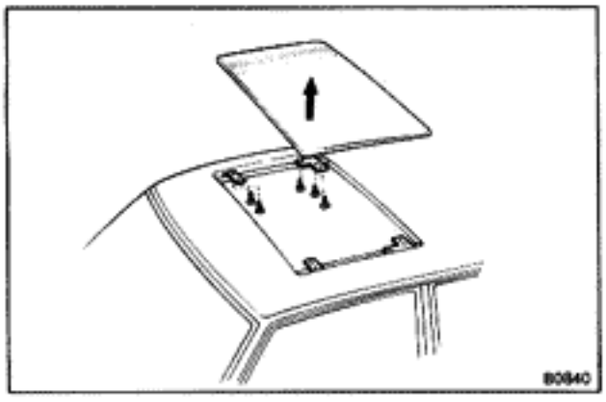

REMOVAL OF SLIDING ROOF PANEL

TO REMOVE ONLY SLIDING ROOF PANEL

(a) Pull loose the clips and slide the headlining rearward.

(b) Remove the front and rear shoe bolts.

(c) Remove the roof panel.

SAFETY PAD

COMPONENTS

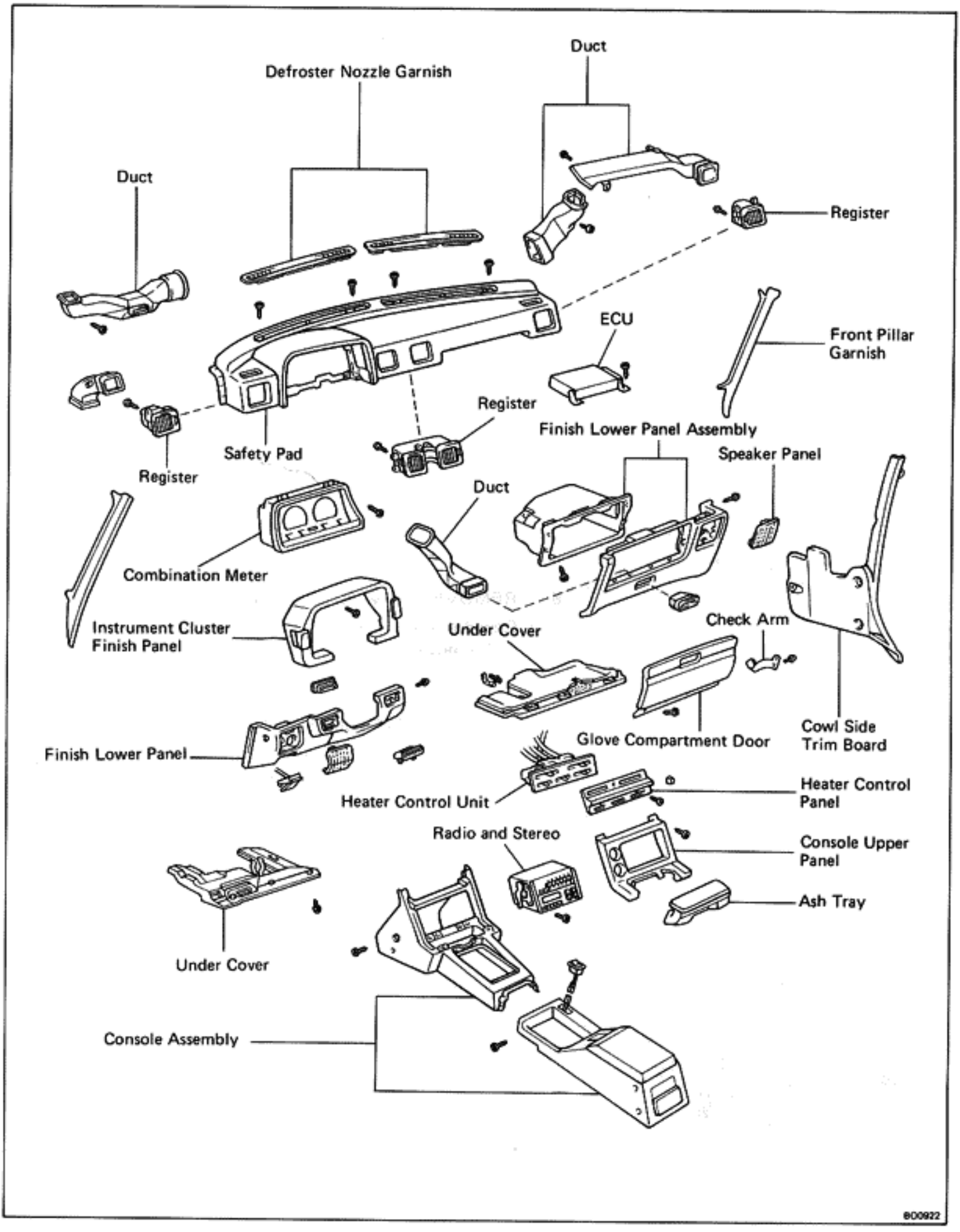

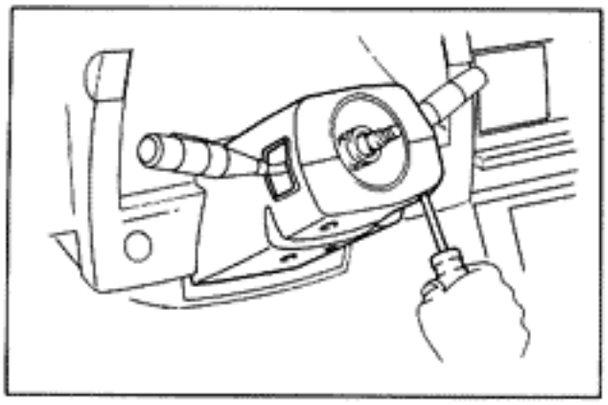

REMOVAL OF SAFETY PAD

1. DISCONNECT CABLE FROM NEGATIVE TERMINAL OF BATTERY
2. REMOVE STEERING WHEEL
3. REMOVE STEERING COLUMN COVER
4. REMOVE CONSOLE ASSEMBLY
   (a) Remove the shift lever knob. (M/T only)
   (b) Remove the ash tray.
   (c) Remove the five heater control knobs.
   (d) Remove the three screws and heater control panel.
   (e) Remove the six set screws, disconnect two connectors, and remove the console upper panel.
   (f) Remove the eight screws, disconnect the connectors, and remove the console assembly.

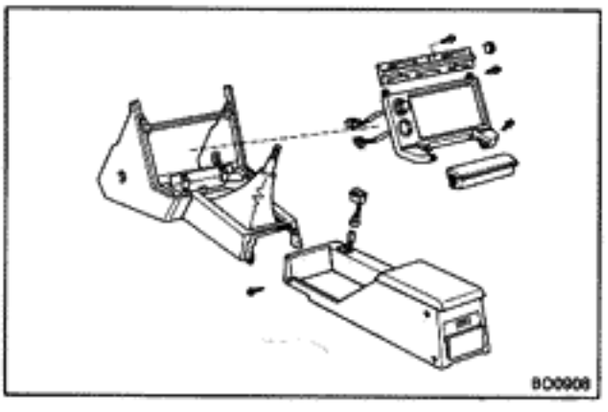

5. REMOVE HOOD RELEASE LEVER BRACKET

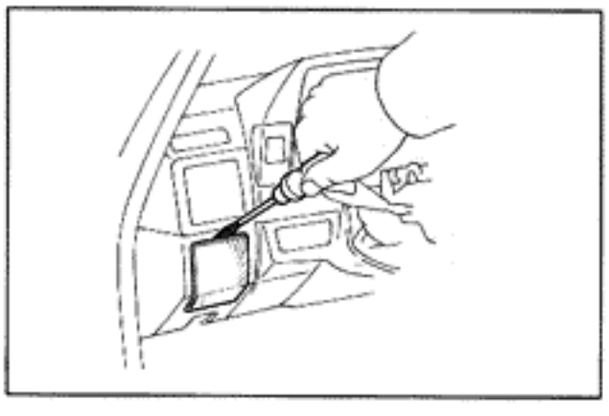

6. REMOVE DRIVER SIDE SPEAKER PANEL
   Pry loose the panel with a screwdriver and remove it.
7. REMOVE DRIVER SIDE UNDER COVER
   Remove the three screws, two clamps and cover.
8. REMOVE DRIVER SIDE FINISH LOWER PANEL
   Remove the six screws, disconnect the four connectors, and remove the lower panel.

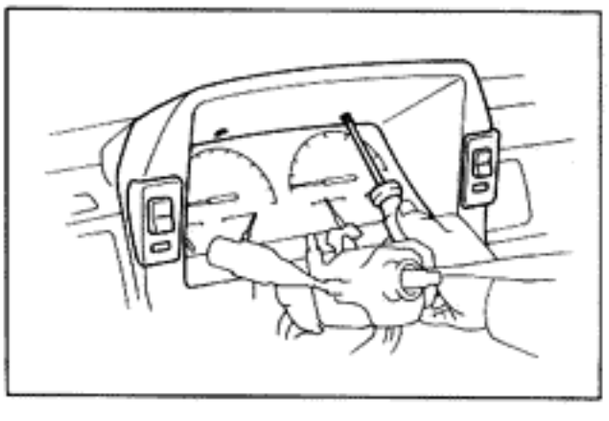

9. REMOVE INSTRUMENT CLUSTER FINISH PANEL
   Remove the five screws, and disconnect the connectors. Then remove the cluster finish panel.

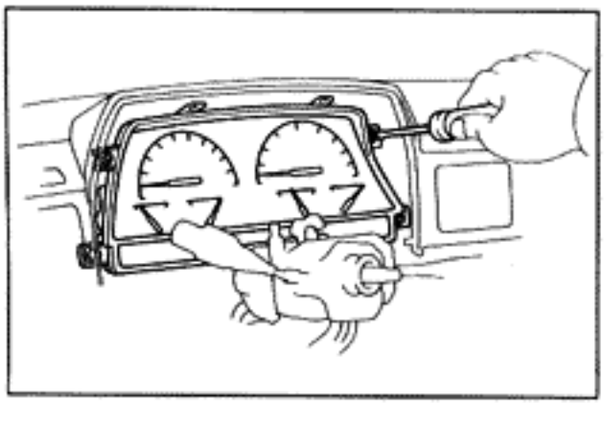

10. REMOVE COMBINATION METER
    (a) Remove the four screws.
    (b) Disconnect the connectors and speedometer cable.
    (c) Remove the combination meter.

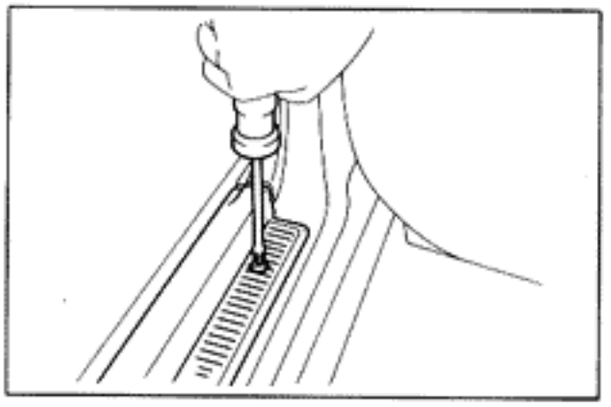

11. REMOVE PASSENGER SIDE COWL SIDE TRIM BOARD

(a) Remove the scuff plate screw.

(b) Remove the four screws and cowl side trim board.

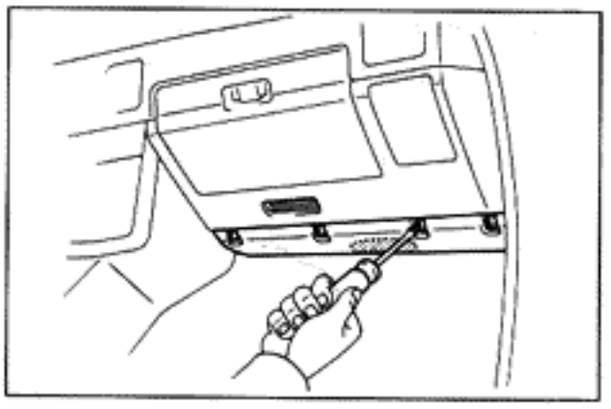

12. REMOVE PASSENGER SIDE INSTRUMENT PANEL UNDER COVER

Remove the three screws and the under cover.

13. REMOVE PASSENGER SIDE SPEAKER PANEL

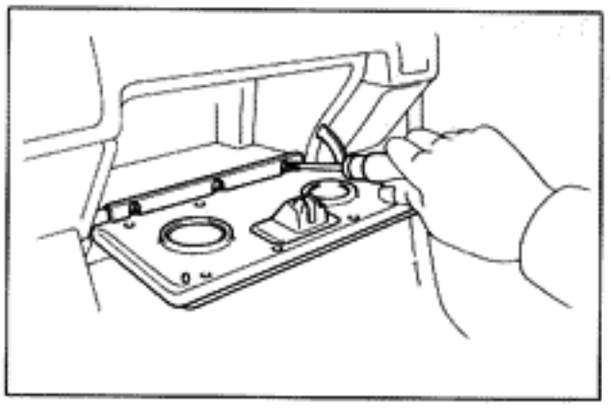

14. REMOVE PASSENGER SIDE FINISH LOWER PANEL ASSEMBLY

(a) Remove the glove compartment door check arm and the compartment door.

(b) Remove the door lock striker.

(c) Remove the finish lower panel.

(d) Disconnect the two connectors.

NOTE: If necessary, remove the speaker.

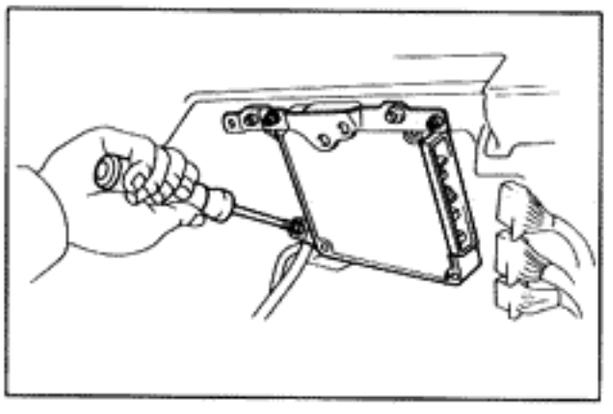

15. REMOVE ECU

(a) Disconnect the three connectors.

(b) Remove the three screws and the ECU.

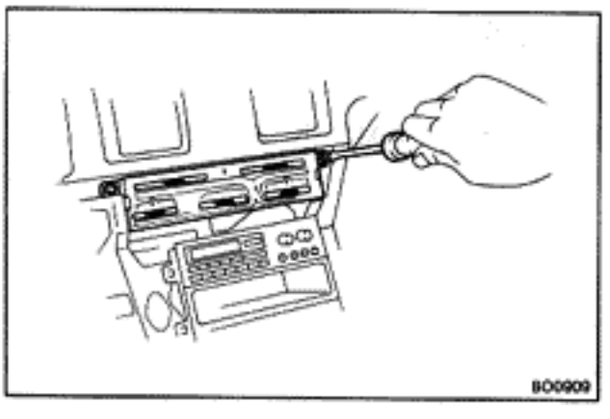

16. REMOVE SCREWS OF HEATER CONTROL ASSEMBLY

Remove the four screws of the heater control assembly.

NOTE: Do not disconnect the heater control cable.

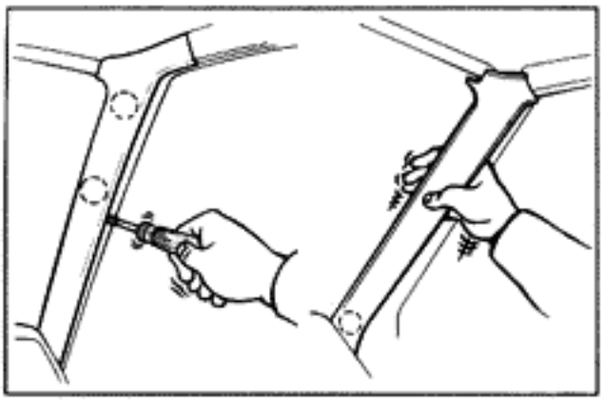

17. REMOVE FRONT PILLAR GARNISH

Pry loose the clips with a screwdriver, and pull the garnish upward to remove it.

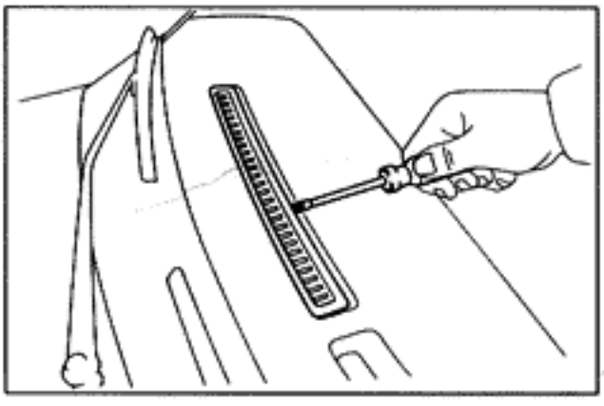

18. REMOVE DEFROSTER NOZZLE GARNISH

Using a screwdriver, pry between the defroster nozzle garnish and safety pad.

CAUTION: Be careful not to scratch the safety pad.

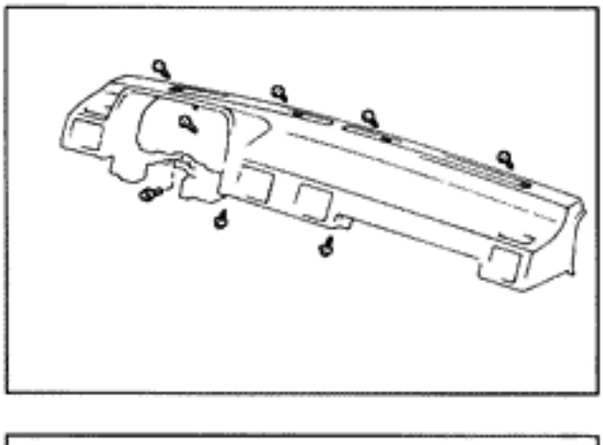

19. REMOVE SAFETY PAD

(a) Remove the seven screws and one bolt.

(b) Disconnect the four connectors.

(c) Remove the safety pad.

(d) Remove the left and right side defroster nozzle ducts.

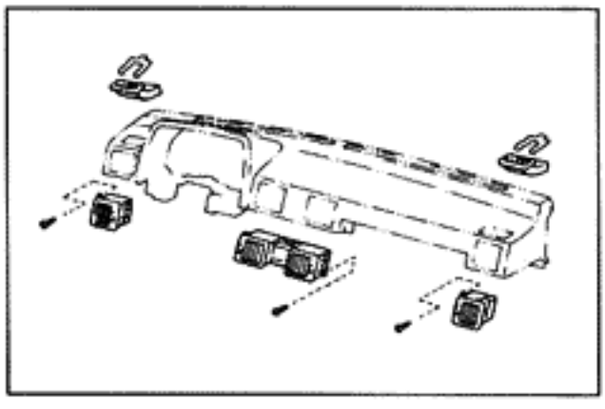

(e) Remove the instrument panel center register from the safety pad.

(f) Remove the left and right instrument panel side registers from the safety pad.

(g) Remove the side defroster retainer and defroster nozzle.

INSTALLATION OF SAFETY PAD

(See page BO-42)

INSTALL PARTS OF SAFETY PAD IN REVERSE SEQUENCE OF REMOVAL

FRONT SEAT

COMPONENTS

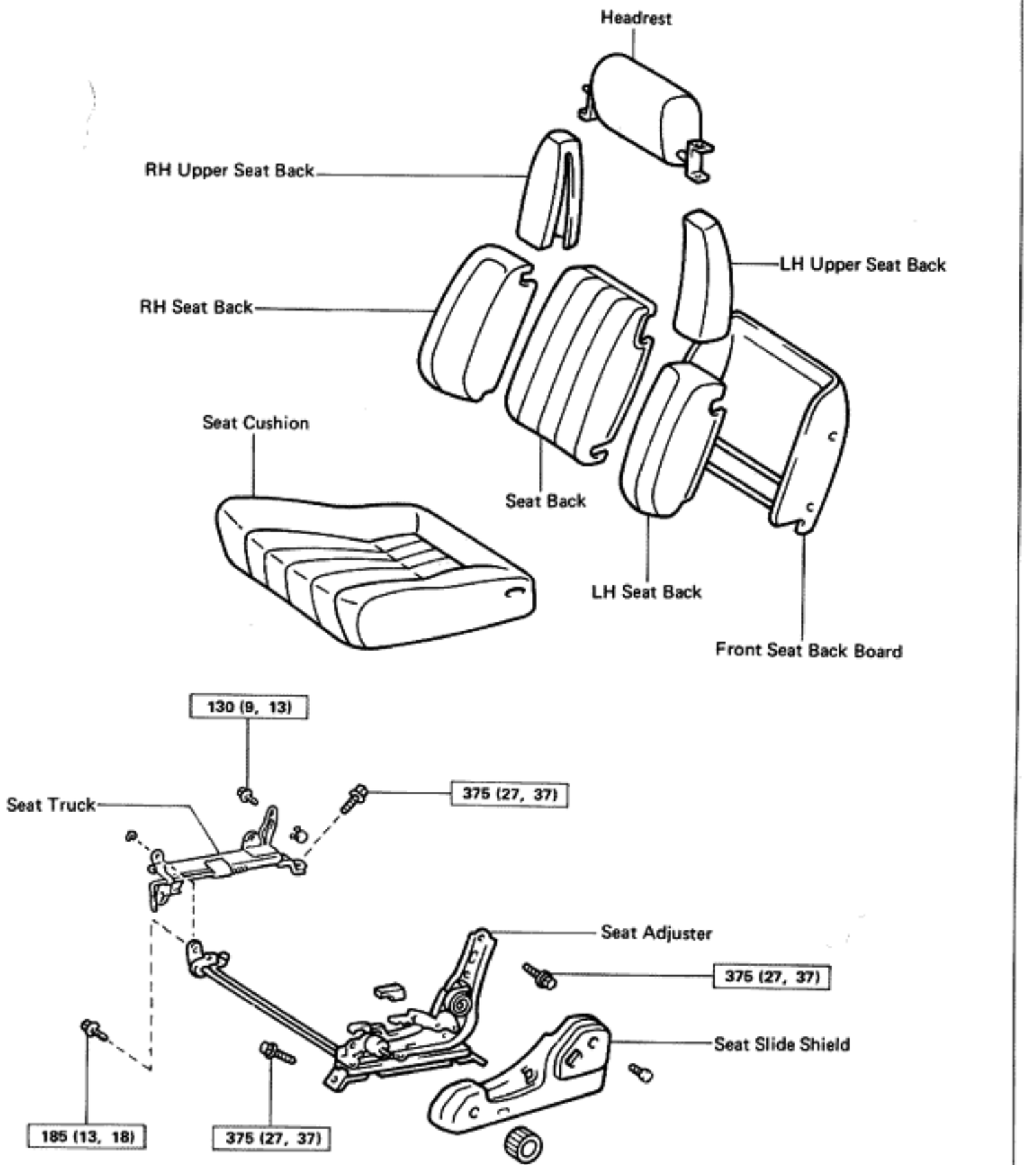

kg-cm (ft-lb, N·m) : Specified torque

BO0923

REAR SEAT

COMPONENTS

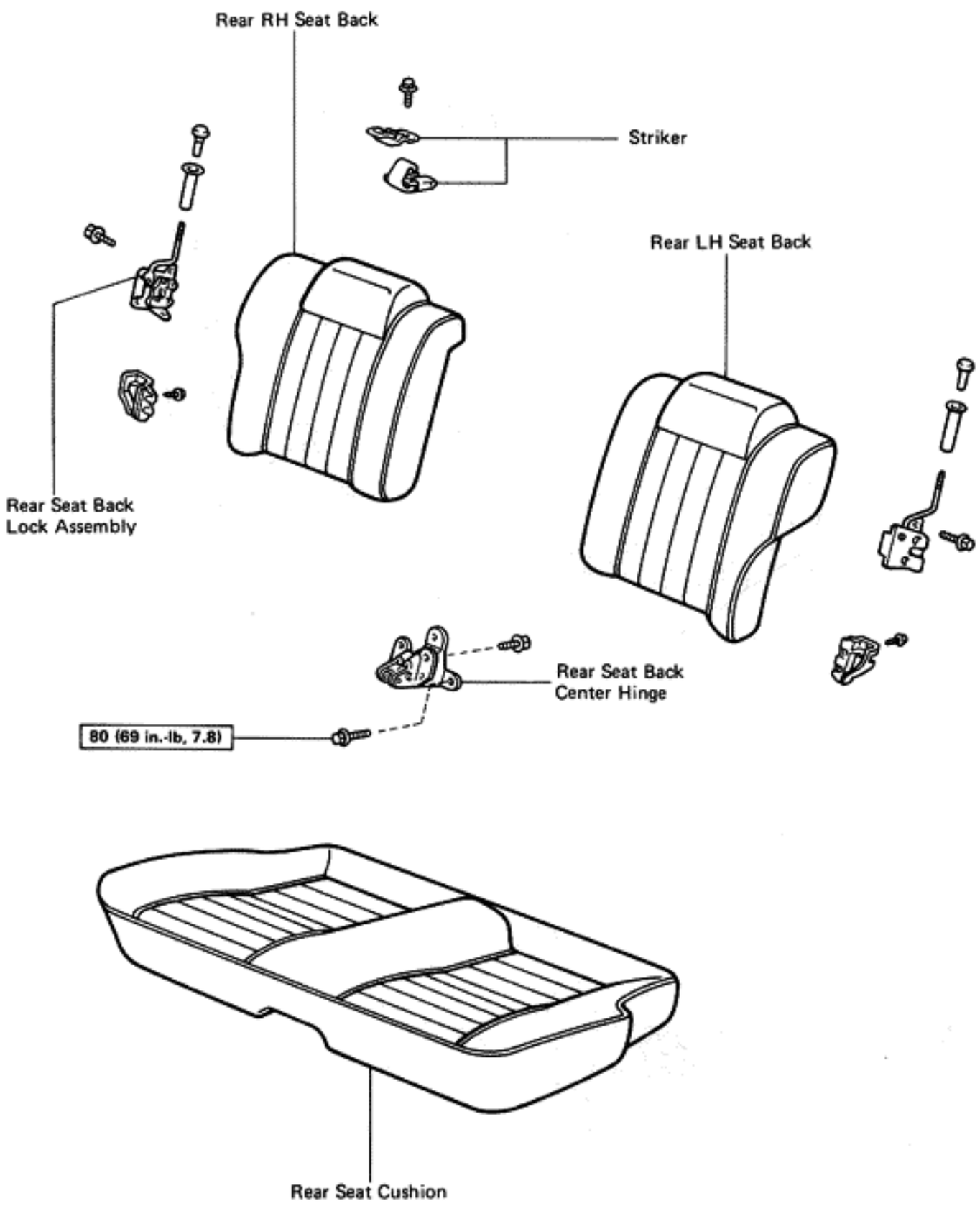

kg·cm (ft-lb, N·m) : Specified torque

BO0924

SEAT BELT

COMPONENTS

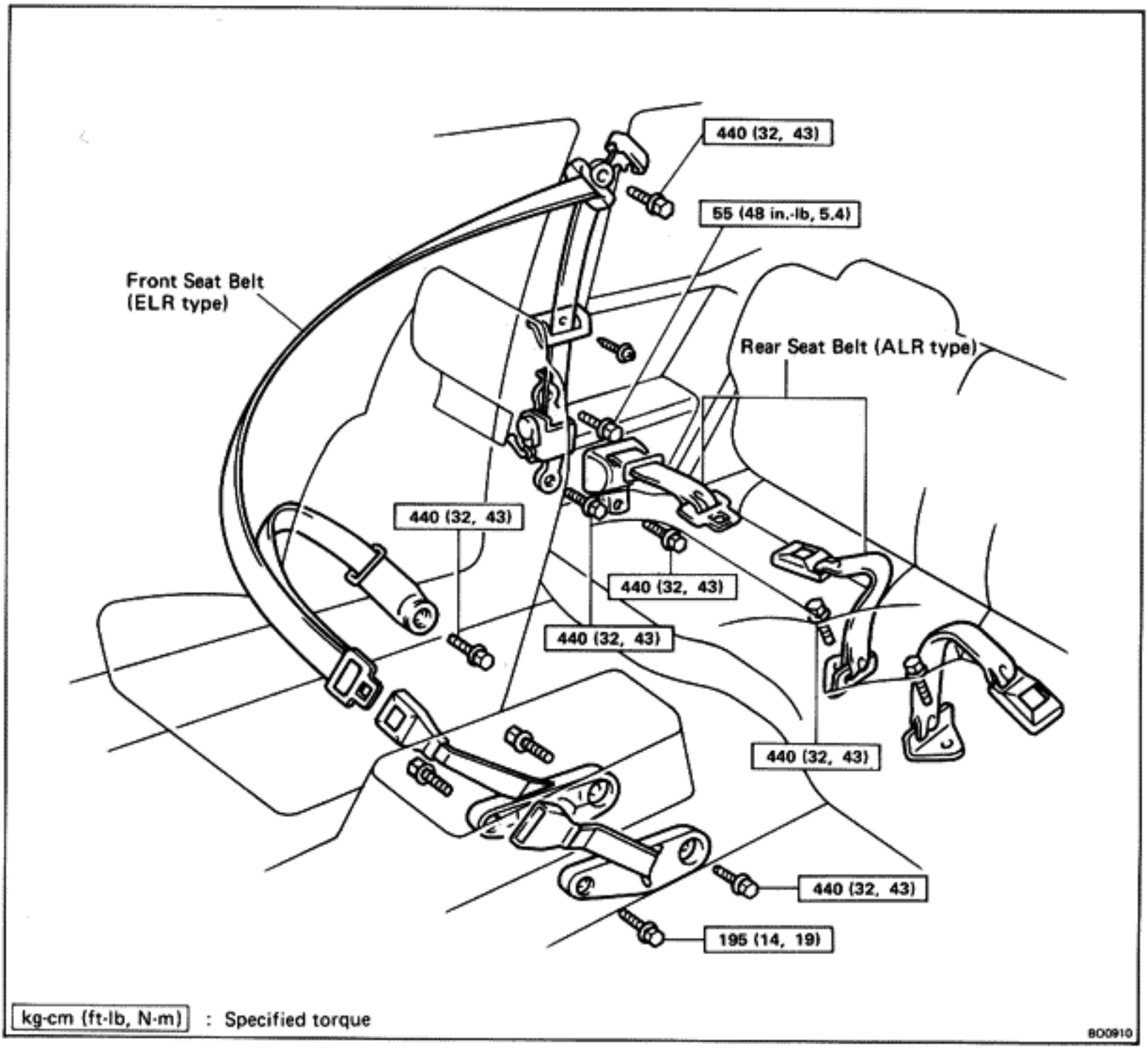

FRONT SEAT BELT
[Emergency Locking Retractor (ELR) Type]

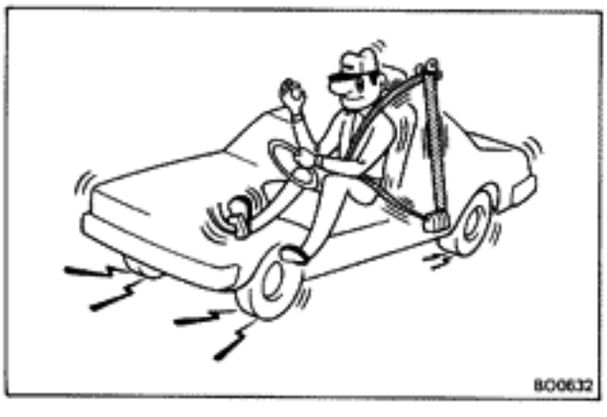

1. RUNNING TEST (IN SAFE AREA)
   (a) Fasten the front seat belt.
   (b) Drive the car at 10 mph (16 km/h) and make a very hard stop.
   (c) Check that the belt is locked and cannot be extended at this time.

NOTE: Conduct this test in a safe area. If the belt does not lock, remove the belt mechanism assembly and conduct the following static check. Also, whenever installing a new belt assembly, verify the proper operation before installation.

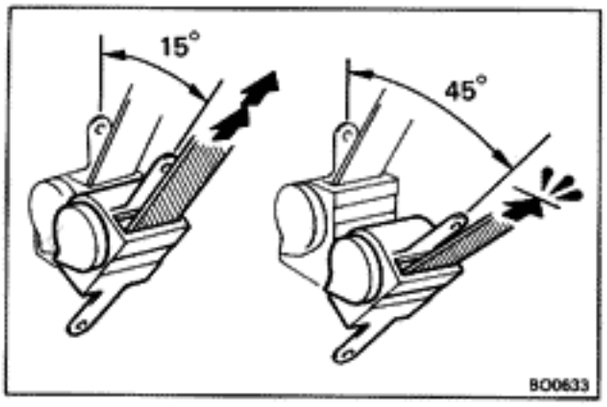

2. **STATIC TEST**

(a) Remove the locking retractor assembly.

(b) Tilt the retractor slowly.

(c) Verify that the belt can be pulled out at a tilt of 15 degrees or less, and cannot be pulled out at over 45 degrees of tilt.

If a problem is found, replace the assembly.

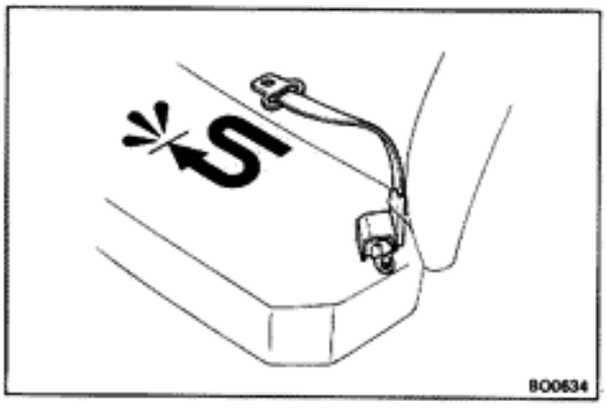

OUTBOARD REAR SEAT BELT [Automatic Locking Retractor (ALR) Type]

TESTING

(a) Pull out the belt, release it slightly and then pull it out again.

(b) Verify that the belt cannot be extended further.

If a problem is found, replace the assembly.

BODY DIMENSIONS

Symbol	Nomenclature	Hole dia. (mm)	Symbol	Nomenclature	Hole dia. (mm)
A,a	Front fender front installation nut	6ϕ	O,o	Front floor under reinforcement front standard hole	15ϕ
B,b	Front spring support inner hole	11ϕ	P,p	Front floor under reinforcement rear standard hole	15ϕ
C,c	Front fender rear installation nut	6ϕ	Q,q	Center floor side member standard hole	15ϕ
D	Cowl top seal center installation hole	6ϕ	R,r	Rear suspension member installation nut	20ϕ
E,e	Front side member standard hole	15ϕ	S,s	Rear torque box standard hole	15ϕ
F,f	Front suspension member rear side upper installation hole	15ϕ	T,t	Center floor side member standard hole	11ϕ
G,g	Front side member bumper installation nut	14ϕ	U,u	Rear floor side member standard hole	15ϕ
H,h	Front side member rear side upper bumper installation hole	15ϕ	V,v	Rear floor side member standard hole	15ϕ
I,i	Retractable light bracket upper installation nut	9ϕ	W	Upper back reinforcement standard hole	20ϕ
J,j	Cooler condenser lower installation nut	6ϕ	X,x	Back door outer installation hole	13ϕ
K,k	Strut bar bracket front side inner installation hole	13ϕ	Y,y	Rear floor pan front standard hole	40ϕ
L,l	Strut bar bracket rear side rear installation hole	15ϕ			
M,m	Front suspension member front side lower installation hole	15ϕ			
N,n	Front suspension member rear side lower installation hole	15ϕ			

Engine Compartment

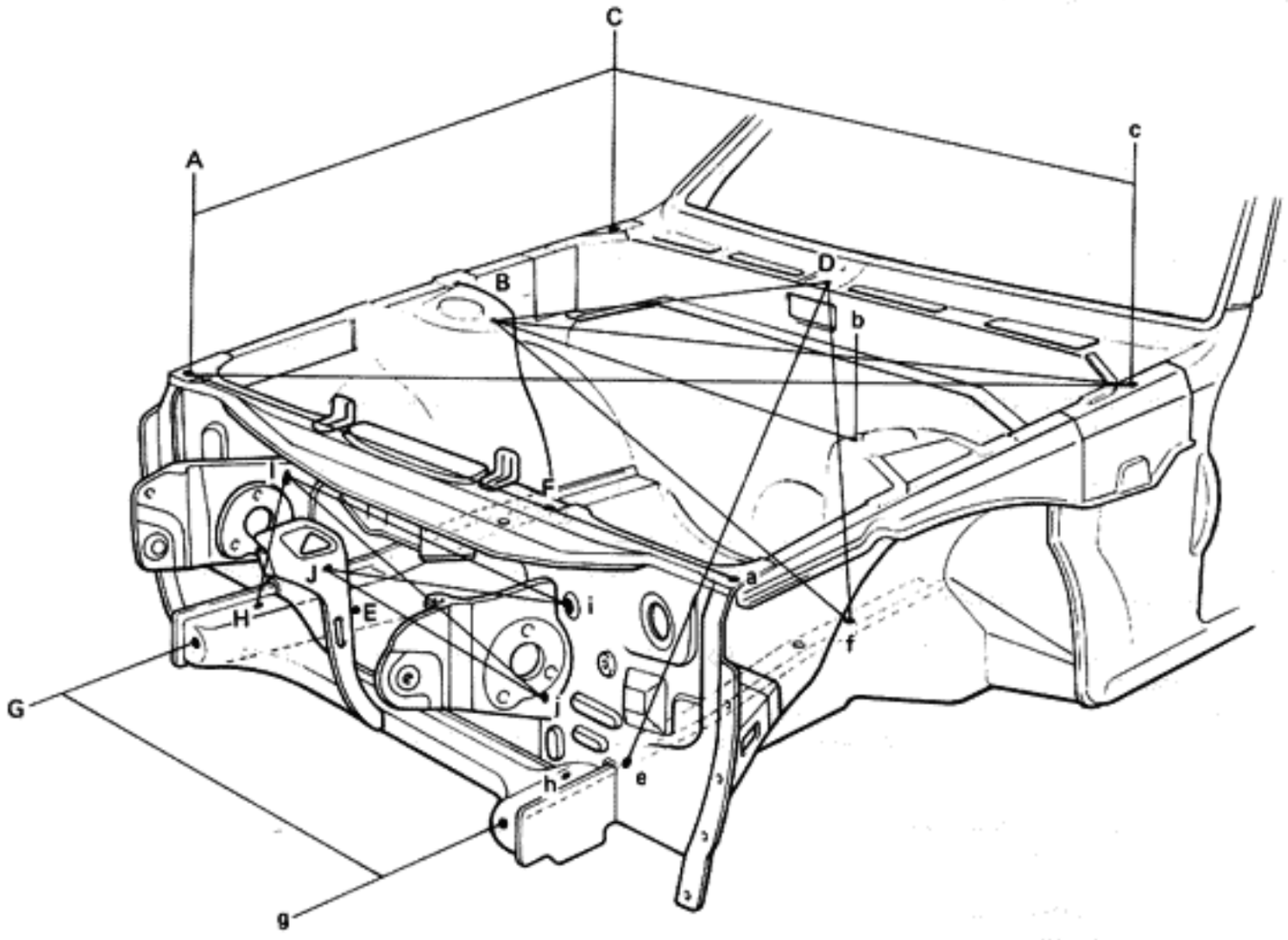

mm (in.)

A – a	A – C a – c	A – c a – C	B – b	B – c b – C	B – C b – c
1,335 (52.56)	982 (38.66)	1,666 (65.59)	946 (37.24)	1,220 (48.03)	454 (17.87)
B – f b – F	C – c	D – E D – e	D – F D – f	D – B D – b	G – g
939 (36.97)	1,355 (53.35)	1,132 (44.57)	718 (28.27)	609 (23.98)	862 (33.94)
I – i	I – j	i – J	i – h I – H	J – j	
846 (33.31)	789 (31.06)	820 (32.28)	245 (9.65)	701 (27.60)	

Under Body

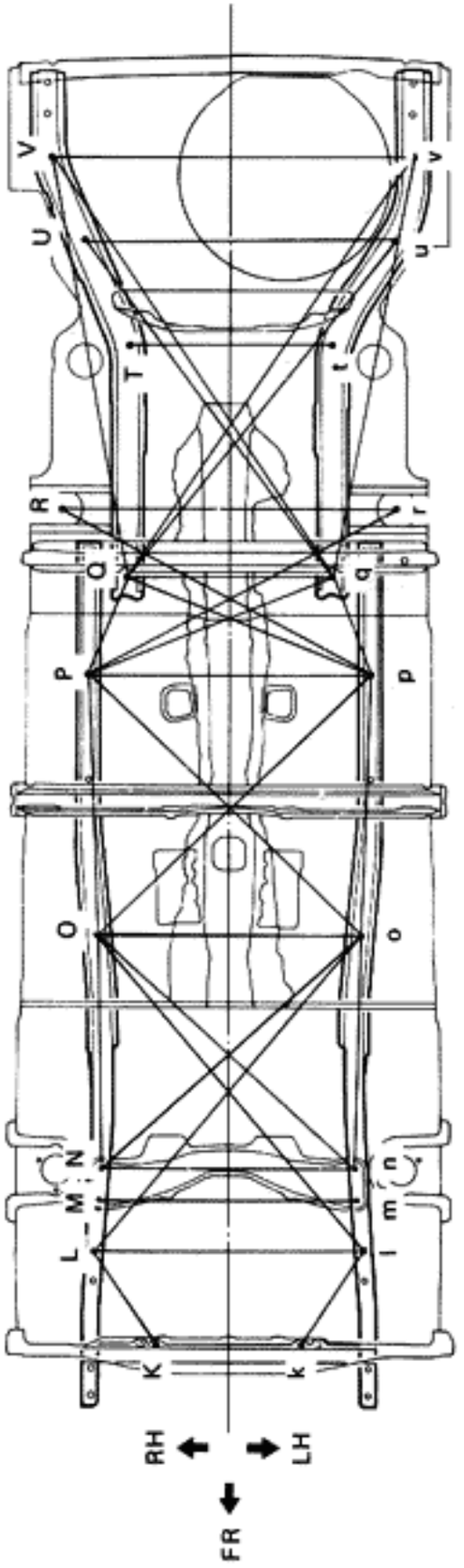

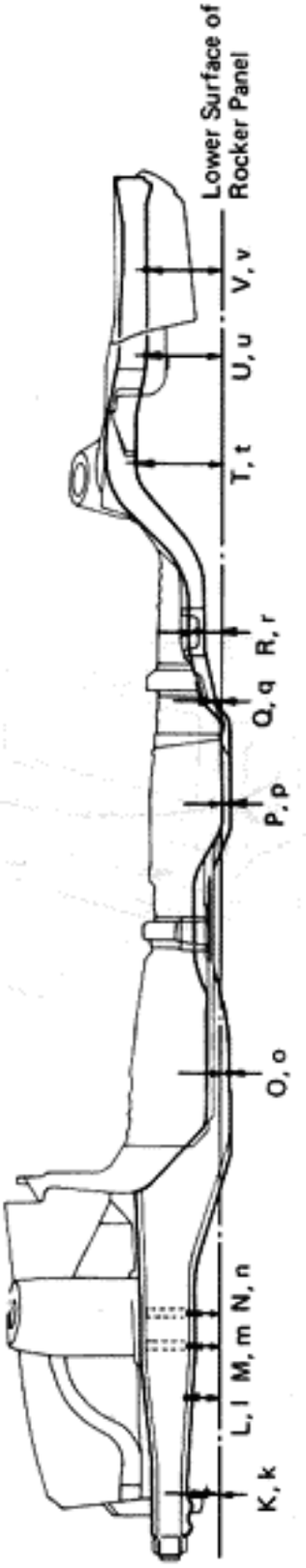

Point symbol	Reference length mm (in.)
K – L k – l	338 (13.31)
L – l	818 (32.20)
L – o l – O	1,285 (50.59)
M – m	789 (31.06)
N – n	774 (30.47)
N – o n – O	1,081 (42.56)
N – O n – o	740 (29.13)
O – o	802 (31.57)
O – p o – P	1,168 (45.98)
O – P o – p	821 (32.32)
P – p	860 (33.86)
P – Q p – q	331 (13.03)
P – q p – Q	803 (31.61)
P – r P – R	1,105 (43.50)
Q – q	622 (24.49)
Q – V	1,352 (53.23)
q – v	1,359 (53.50)
Q – u	1,367 (53.82)
q – U	1,329 (52.32)
Q – v	1,596 (62.83)
q – V	1,583 (62.32)
R – r	1,072 (42.20)
T – t	625 (24.61)
U – u	971 (38.23)
V – v	1,109 (43.66)
K,k	64 (2.52)
L,l	93 (3.66)
M,m	85 (3.35)
N,n	85 (3.35)
O,o	36 (1.42)
P,p	37 (1.46)
Q,q	7 (0.28)
R,r	72 (2.83)
T,t	242 (9.53)
U,V	207 (8.15)
u,v	226 (8.90)

Luggage Compartment

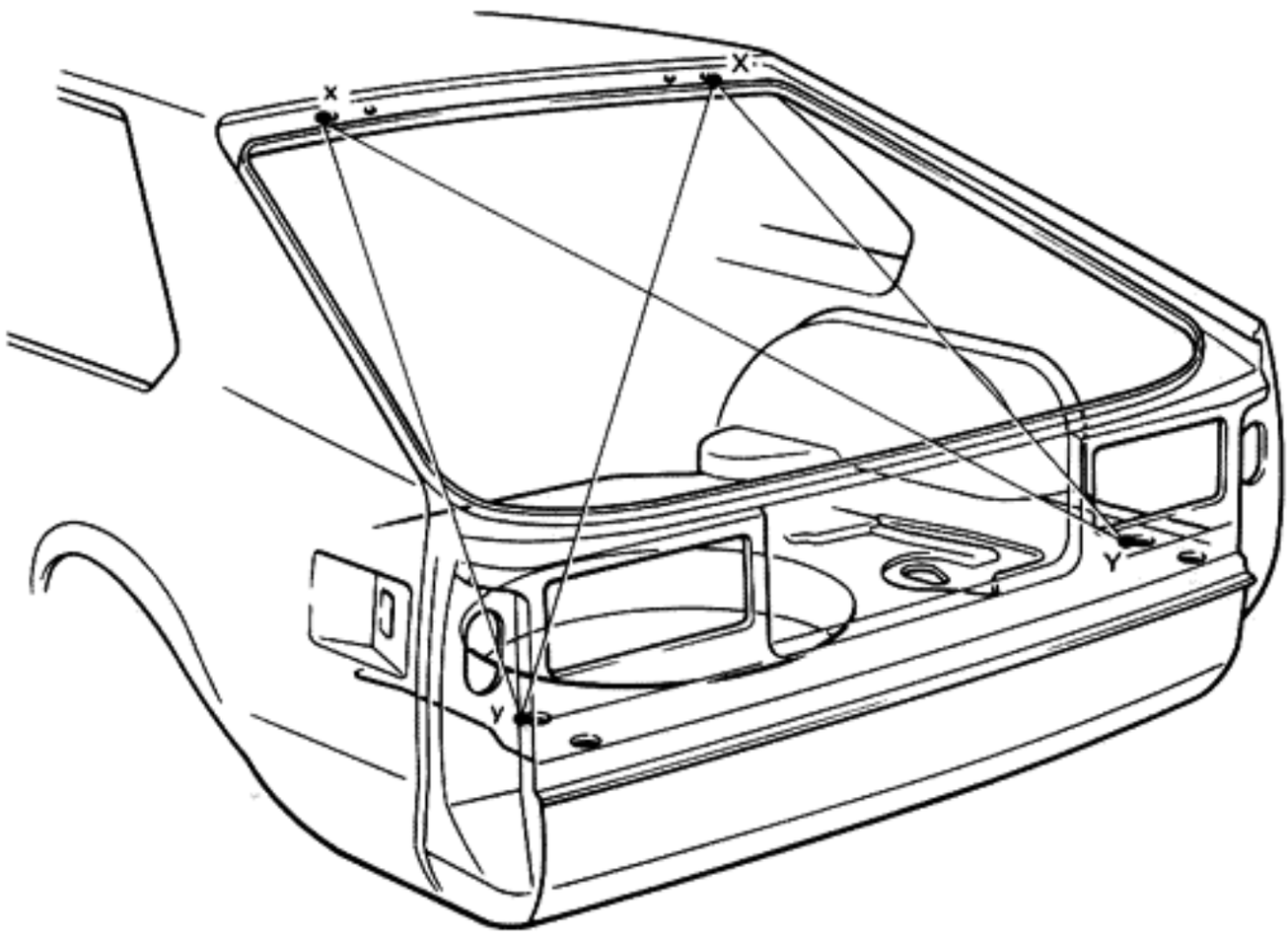

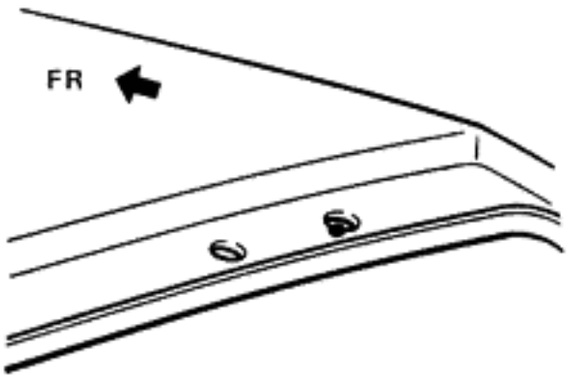

Point symbol	Reference length mm (in.)
X – Y	1,242 (48.90)
x – y	1,230 (48.43)
X – y	1,472 (57.95)
x – Y	1,482 (58.35)

NOTE: The luggage compartment measurement is performed between the two dot marked points as shown in the figure.

AIR CONDITIONING SYSTEM

	Page
PRECAUTIONS	AC-2
TROUBLESHOOTING	AC-2
Checking of Refrigeration System with Manifold Gauge	AC-4
SPECIAL TOOLS AND TEST EQUIPMENT	AC-8
AIR CONDITIONING SYSTEM CIRCUIT	AC-9
ON-VEHICLE INSPECTION	AC-10
REFRIGERATION SYSTEM	AC-11
Checking of Refrigerant Charge	AC-11
Installation of Manifold Gauge Set	AC-11
Discharging of Refrigeration System	AC-12
Evacuating and Charging of Refrigeration System	AC-12
FUNCTIONAL TEST AND ADJUSTMENT	AC-16
Vacuum Circuit	AC-16
Power Servo Unit Operation	AC-17
Automatic Temperature Control	AC-18
Air Mix Damper Linkage	AC-19
Sensor Circuit	AC-19
Double Vacuum Valve (DVV)	AC-20
Water Temperature Switch	AC-20
Condenser Motor	AC-21
SYSTEM COMPONENTS	AC-22
COMPRESSOR	AC-23
CONDENSER	AC-36
RECEIVER	AC-37
COOLING UNIT	AC-37
Evaporator	AC-39
REFRIGERANT LINES	AC-40
EXPANSION VALVE	AC-41
VACUUM SWITCHING VALVE (VSV)	AC-42

PRECAUTIONS

1. **When handling refrigerant (R-12), the following precautions should be observed:**
   (a) Always wear eye protection.
   (b) Keep the refrigerant container (service drum) below 40°C (104°F).
   (c) Do not handle refrigerant in an enclosed area where there is an open flame.
   (d) Discharge refrigerant slowly when purging the system.
   (e) Be careful that the liquid refrigerant does not get on your skin.

2. **If liquid refrigerant gets in the eyes or on the skin:**
   (a) Do not rub the eye or skin.
   (b) Wash the area with a lot of cool water.
   (c) Apply clean petroleum jelly to the skin.
   (d) Rush to a physician or hospital for immediate professional treatment.
   (e) Do not attempt to treat yourself.

3. **When tubing:**
   (a) Apply a few drops of compressor oil to the seats of the O-ring fittings.
   (b) Tighten the nut using two wrenches to avoid twisting the tube.
   (c) Tighten the O-ring fitting to the specified torque.

Tightening torque for O-ring fittings

Fitting size	Torque
0.31 in. Tube	135 kg-cm (10 ft-lb, 13 N·m)
0.50 in. Tube	225 kg-cm (16 ft-lb, 22 N·m)
0.62 in. Tube	325 kg-cm (24 ft-lb, 32 N·m)

TROUBLESHOOTING

Symptom	Possible causes	Checks and corrections	Page
No blower operation	Blown circuit breaker	Replace	AC-9
	Defective blower motor	Check and repair	AC-9
	Defective heater relay	Check operation	AC-9
	Defective A/C cut-off relay	Check operation	AC-9
	Defective blower switch	Check for short or open	AC-9
	Defective wiring connection	Check and repair	AC-9
No blower control	Blown blower resistor	Replace	AC-9
	Defective blower switch	Check for short or open	AC-9
	Defective temperature sensors (in-car sensor, ambient sensor)	Check for short or open	AC-19
	Defective rheostat	Check for short or open	AC-9
	Defective power servo unit	Check operation	AC-17
	Defective DVV	Check operation	AC-20
	Defective amplifier	Check operation	

TROUBLESHOOTING (Cont'd)

Symptom	Possible causes	Checks and corrections	Page
No blower control	Defective water temperature relay	Check for open	AC-9
	Defective heat mode switch	Check for short	AC-9
	Defective water temperature switch	Check for short	AC-20
	Defective Hi-speed relay	Check for short	AC-9
	Defective wiring connection	Check and repair	AC-9
	Defective vacuum circuit	Check for leak and repair	AC-16
Interior temperature does not lower	Blown fuse or circuit breaker	Replace	AC-9
	Defective magnetic clutch	Check and repair	AC-23
	Defective compressor	Check and repair	AC-23
	Defective pressure switch	Replace	AC-9
	Defective expansion valve	Replace	AC-4
	Defective EPR	Replace	AC-4
	Insufficient refrigerant in system	Check discharge refrigeration system	AC-11
	Defective A/C switch	Check for short or open	AC-9
	Defective temperature sensors (in-car sensor, ambient sensor)	Check for short	AC-19
	Defective rheostat	Check for short	AC-9
	Defective power servo unit	Check operation	AC-17
	Defective DVV	Check operation	AC-20
	Defective amplifier	Check operation	
	Defective condenser motor	Check operation	AC-21
	Defective A/C relay	Check operation	AC-9
	Defective wiring connection	Check and repair	AC-9
	Defective vacuum circuit	Check for leak and repair	AC-16
Interior temperature does not rise	Defective water valve	Check operation	
	Defective temperature sensors (in-car sensor, ambient sensor)	Check for open	AC-19
	Defective rheostat	Check for open	AC-9
	Defective power servo unit	Check operation	AC-17
	Defective DVV	Check operation	AC-20
	Defective amplifier	Check operation	
	Defective wiring connection	Check and repair	AC-9
	Defective vacuum circuit	Check for leak and repair	AC-16
Unstable operation (hunting)	Defective vacuum circuit	Check for leak and repair	AC-16
	Poor connection of rheostat	Check and repair	AC-9
	Defective power servo unit	Check operation	AC-17
	Defective DVV	Check operation	AC-20
	Defective amplifier	Check operation	
	Poor connection in wire	Check and repair	AC-9
Improper shifting of dampers	Misadjusted control lever or rod	Check and repair	
	Disconnected control wire	Check and repair	AC-9
	Defective dampers	Check and repair	AC-19

Checking of Refrigeration System with Manifold Gauge

This is a method in which the trouble is located by using a manifold gauge.

Read the manifold gauge pressure with the following established conditions:

(a) Temperature at the air inlet is 30 – 35°C (86 – 95°F)

(b) Engine running at 2,000 rpm

(c) Blower speed set at high

(d) A/C switch ON

(e) Temperature control lever set at cool

NOTE: It should be noted that the gauge indications may vary slightly due to ambient temperature conditions.

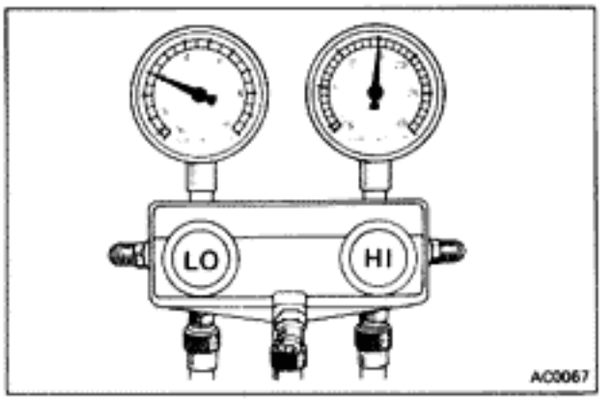

1. NORMALLY FUNCTIONING REFRIGERATION SYSTEM

Gauge reading:

Low pressure side 1.5 – 2.0 kg/cm² (21 – 28 psi, 147 – 196 kPa)

High pressure side 14.5 – 15.0 kg/cm² (206 – 213 psi, 1,422 – 1,471 kPa)

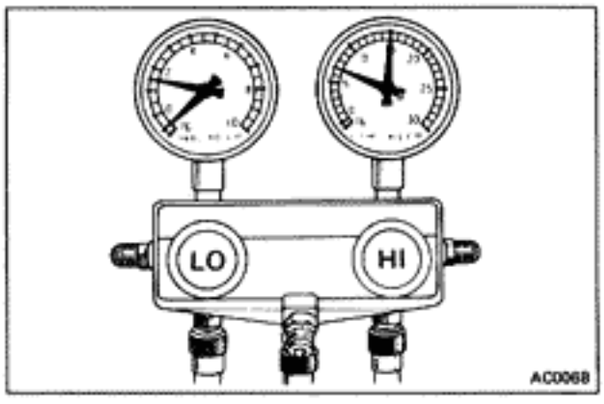

2. MOISTURE PRESENT IN REFRIGERATION SYSTEM

Condition: Periodically cools and then fails to cool

Symptom seen in refrigeration system	Probable cause	Diagnosis	Remedy
During operation, pressure at low pressure side sometimes becomes a vacuum and sometimes normal	Moisture entered in refrigeration system freezes at expansion valve orifice and temporarily stops cycle, but normal state is restored after a time when the ice melts	Drier in oversaturated state ↓ Moisture in refrigeration system freezes at expansion valve orifice and blocks circulation of refrigerant	(1) Replace receiver and drier (2) Remove moisture in cycle through repeated vacuum purging (3) Charge new refrigerant to proper amount

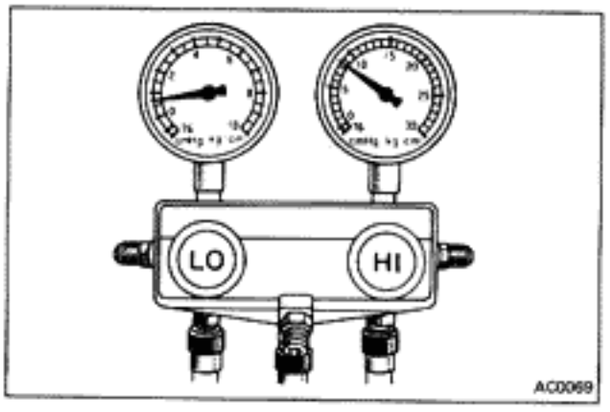

3. INSUFFICIENT REFRIGERANT

Condition: Insufficient cooling

Symptom seen in refrigeration system	Probable cause	Diagnosis	Remedy
Pressure low at both low and high pressure sides Bubbles seen in sight glass Insufficient cooling performance	Gas leakage at some place in refrigeration system	Insufficient refrigerant in system ↓ Refrigerant leaking	Check with leak tester and repair Charge refrigerant to proper amount

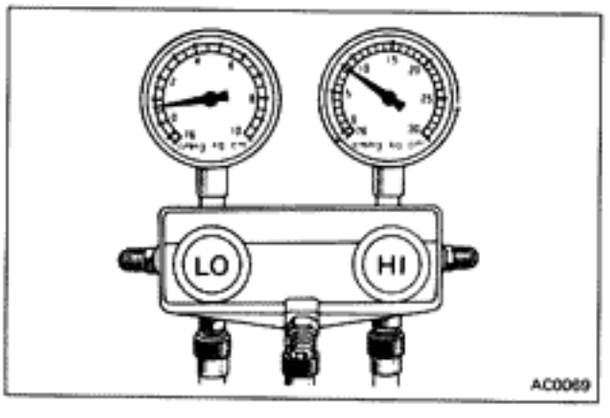

4. POOR CIRCULATION OF REFRIGERANT

Condition: Insufficient cooling

Symptom seen in refrigeration system	Probable cause	Diagnosis	Remedy
Pressure low at both low and high pressure sides Frost on tubes from receiver to unit	Refrigerant flow obstructed by dirt in receiver	Receiver clogged	Replace receiver

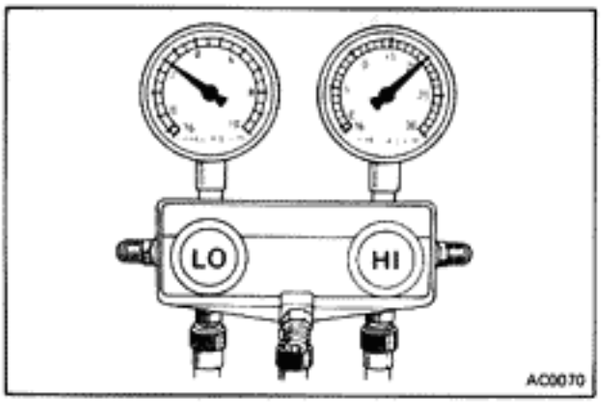

5. REFRIGERANT OVERCHARGE OR INSUFFICIENT COOLING OF CONDENSER

Condition: Does not cool sufficiently

Symptom seen in refrigeration system	Probable cause	Diagnosis	Remedy
Pressures too high at both low and high pressure sides	Unable to develop sufficient performance due to excessive refrigerant in system Condenser cooling insufficient	Excessive refrigerant in cycle → refrigerant overcharged Condenser cooling insufficient → condenser fins clogged or fan motor faulty	(1) Clean condenser (2) Check fan motor operation (3) If (1) and (2) are in normal state, check refrigerant amount **Note:** Vent out refrigerant through gauge manifold low pressure side by gradually opening valve.

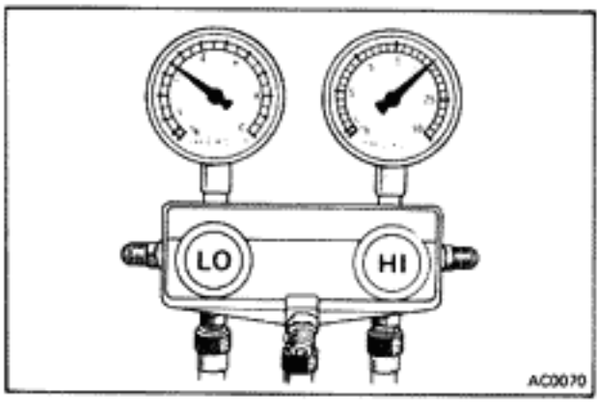

6. EXPANSION VALVE IMPROPERLY MOUNTED/HEAT SENSING TUBE DEFECTIVE (OPENS TOO WIDE)

Condition: Insufficient cooling

Symptom seen in refrigeration system	Probable cause	Diagnosis	Remedy
Pressures too high at both low and high pressure sides Frost or large amount of dew on piping at low pressure side	Trouble in expansion valve or heat sensing tube not installed correctly Refrigerant flow out of adjustment	Excessive refrigerant in low pressure piping ↓ Expansion valve opened too wide	(1) Check heat sensing tube installed condition (2) If (1) is normal, test expansion valve in unit form Replace if defective

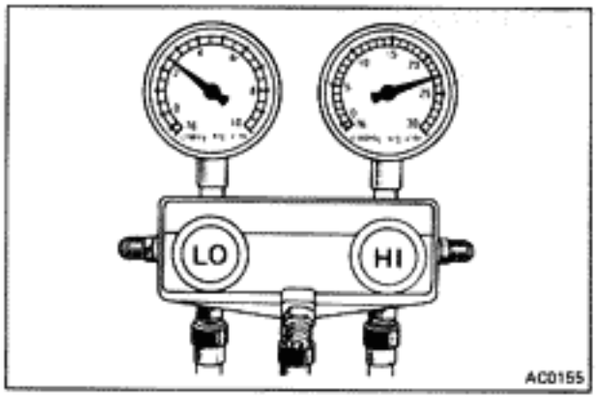

7. AIR PRESENT IN REFRIGERATION SYSTEM

Condition: Does not cool down sufficiently

NOTE: These gauge indications are shown when the refrigeration system has been opened and the refrigerant charged without vacuum purging.

Symptom seen in refrigeration system	Probable cause	Diagnosis	Remedy
Pressure too high at both low and high pressure sides	Air entered in refrigeration system	Air present in refrigeration system ↓ Insufficient vacuum purging	(1) Replace receiver and drier (2) Check compressor oil to see if dirty or insufficient (3) Vacuum purge and charge new refrigerant

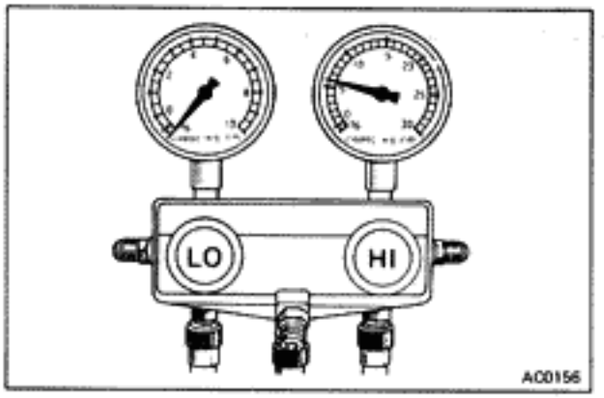

8. REFRIGERANT DOES NOT CIRCULATE

Condition: Does not cool (Cools from time to time in some cases)

Symptom seen in refrigeration system	Probable cause	Diagnosis	Remedy
Vacuum indicated at low pressure side, very low pressure indicated at high pressure side Frost or dew seen on piping before and after receiver and drier or expansion valve	Refrigerant flow obstructed by moisture or dirt in refrigerant freezing or adhering to expansion valve orifice Refrigerant flow obstructed by gas leakage from expansion valve heat sensing tube	Expansion valve orifice clogged ↓ Refrigerant does not flow	Allow to stand for some time and then restart operation to determine if trouble is caused by moisture or dirt If caused by moisture refer to step 2 on page AC-4 If caused by dirt, remove expansion valve and clean off dirt by blowing with air. If unable to remove dirt, replace valve Vacuum purge and charge new refrigerant to proper amount For gas leakage from heat sensing tube, replace expansion valve

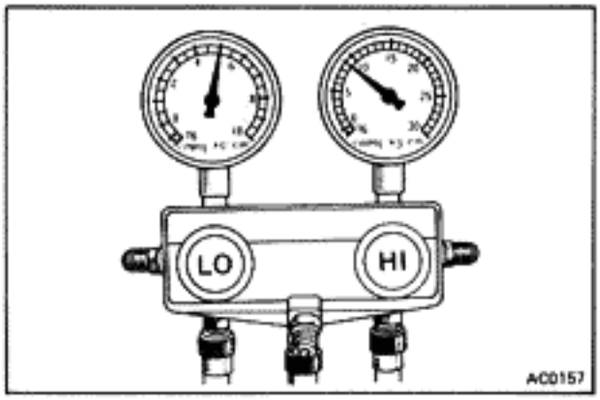

9. INSUFFICIENT COMPRESSION

Condition: Does not cool

Symptom seen in refrigeration system	Probable cause	Diagnosis	Remedy
Pressure too high at low pressure side Pressure too low at high pressure side	Internal leak in compressor	Compression defective ↓ Valves leaking or broken, sliding parts (piston, cylinder, gasket, connecting rod, etc.,) broken	Replace compressor

SPECIAL TOOLS AND TEST EQUIPMENT

Tool	SST No.	Use
Manifold gauge set	07110-78010	To evacuate and charge system
Ohmmeter		To check magnetic clutch
Magnetic clutch tool set	07110-77011	Includes the following 8 tools
Pressure plate remover	07112-71010	To remove pressure plate
Shaft plate remover	07112-15010	To remove shaft plate
Shaft seal remover	07114-15010	To remove shaft seal
Shaft plate installing tool	07112-25010	To install shaft plate
Hexagon wrench set	07110-61050	To remove service valves and front housing
Key press tool	07114-45010	To install key
Snap ring pliers	07114-84020	To remove pressure plate

AIR CONDITIONING SYSTEM CIRCUIT

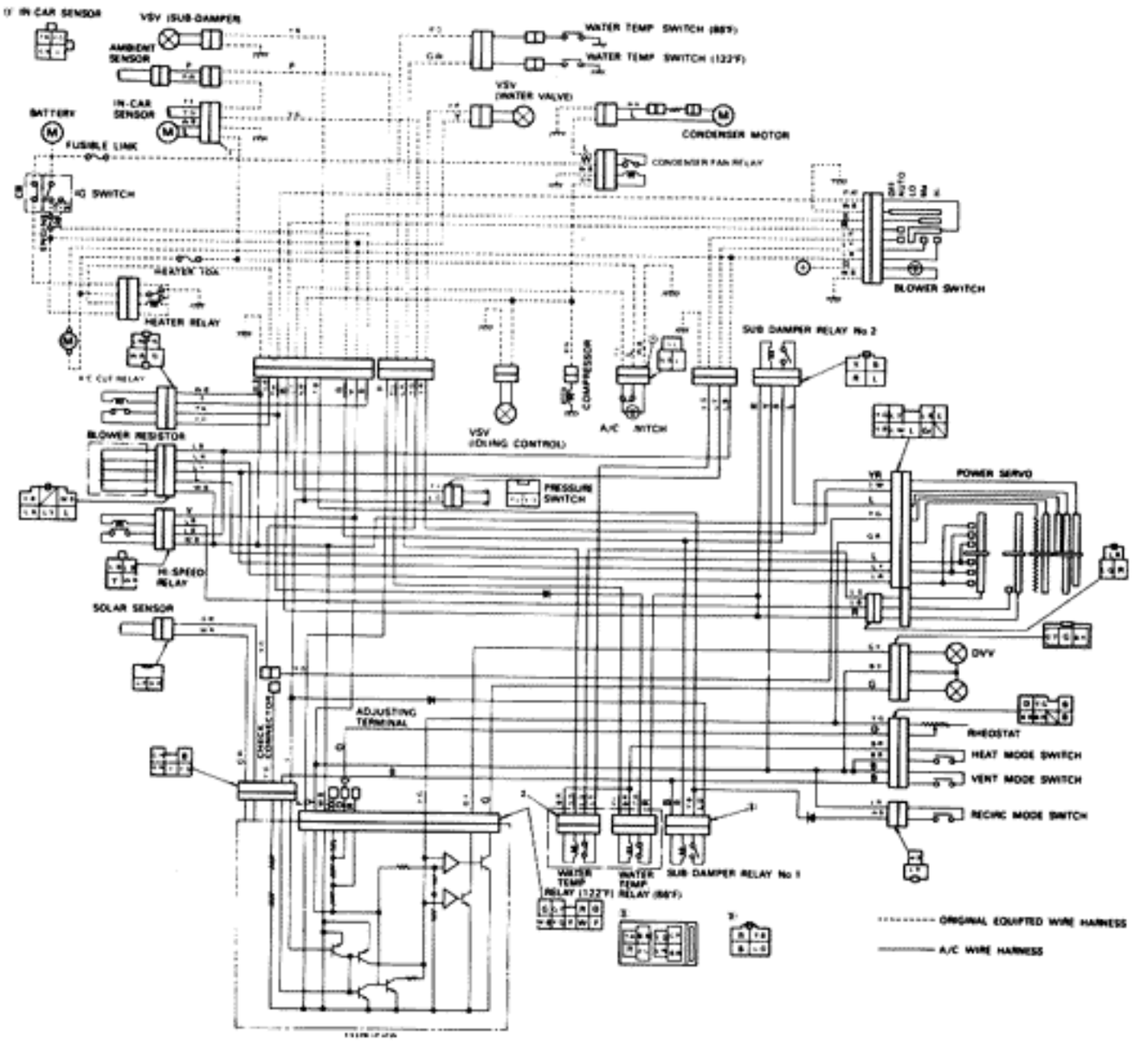

ON-VEHICLE INSPECTION

1. **CHECK CONDENSER FINS FOR BLOCKAGE OR DAMAGE**

   If the fins are clogged, clean them with pressurized water.

   CAUTION: Be careful not to damage the fins.

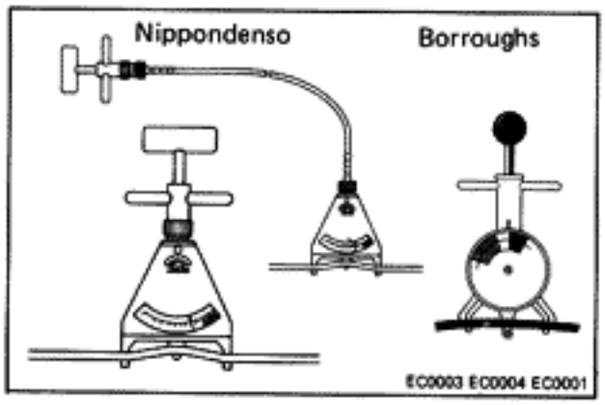

2. **CHECK DRIVE BELT TENSION**

   Using a belt tension gauge, check the drive belt tension.

   Belt tension gauge:
   Nippondenso BTG-20 (95506-00020) or
   Borroughs No. BT-33-73F

   Drive belt tension:
   New belt 160 ± 20 lb
   Used belt 105 ± 10 lb

   NOTE:
   - "New belt" refers to a belt which has been used less than 5 minutes on a running engine.
   - "Used belt" refers to a belt which has been used on a running engine for 5 minutes or more.

3. **START ENGINE**

4. **TURN ON A/C SWITCH**

   Check that the A/C operates at each position of the blower switch.

5. **CHECK MAGNETIC CLUTCH OPERATION**

6. **CHECK THAT IDLE INCREASES**

   When the magnetic clutch engages, engine revolution should increase.

   Standard idle up rpm: 900 – 1,000 rpm

7. **CHECK AMOUNT OF REFRIGERANT**

   If you can see bubbles in the sight glass, additional refrigerant is needed. (See page AC-11)

8. **IF NO OR INSUFFICIENT COOLING, INSPECT FOR LEAKAGE**

   Using a gas leak tester, inspect each component of the refrigeration system. (See page AC-11)

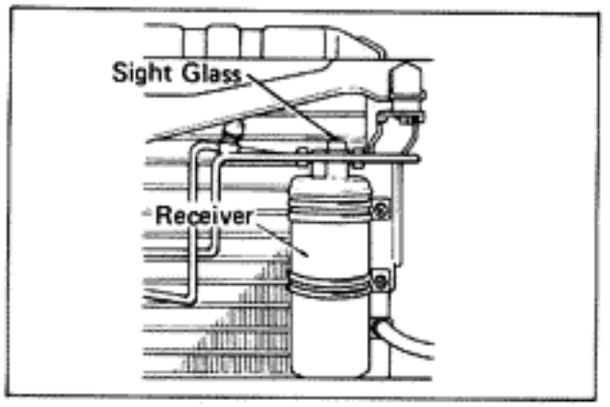

REFRIGERATION SYSTEM

Checking of Refrigerant Charge

1. **RUN ENGINE AT FAST IDLE**
2. **OPERATE AIR CONDITIONER AT MAXIMUM COOLING FOR A FEW MINUTES**
3. **CHECK AMOUNT OF REFRIGERANT**

   Observe the sight glass on the receiver.

Item	Symptom	Amount of refrigerant	Remedy
1	Bubbles present in sight glass	Insufficient	Check for leak with gas leak tester
2	No bubbles present in sight glass	None, sufficient or too much	Refer to items 3 and 4
3	No temperature difference between compressor inlet and outlet	System is empty or nearly empty	Evacuate and charge system. Then check for leak with gas leak tester
4	Temperature between compressor inlet and outlet is noticeably different	Proper or too much	Refer to items 5 and 6
5	Immediately after the air conditioner is turned off, refrigerant in sight glass stays clear	Too much	Discharge the excess refrigerant to specified amount
6	When the air conditioner is turned off, refrigerant foams and then stays clear	Proper	—

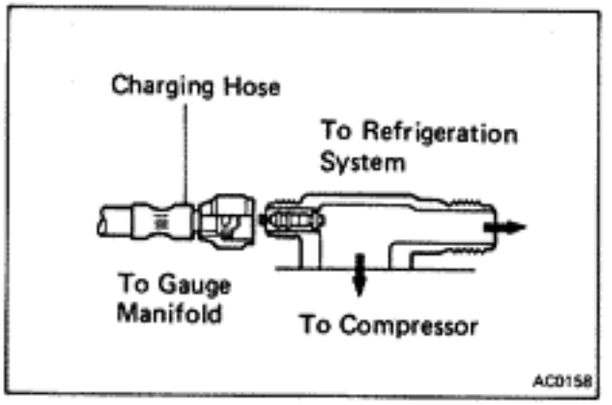

Installation of Manifold Gauge Set

NOTE: Fittings for attaching the manifold gauge set are located on the compressor service valves.

1. **CLOSE BOTH HAND VALVES OF MANIFOLD GAUGE SET**
2. **INSTALL CHARGING HOSES OF GAUGE SET TO SERVICE VALVES**

   Connect the low pressure hose to the suction service valve and the high pressure hose to the discharge service valve. Tighten the hose nuts by hand.

   NOTE: Do not apply compressor oil to the seat of the connection.

Discharging of Refrigeration System

1. CONNECT MANIFOLD GAUGE SET TO COMPRESSOR
2. PLACE FREE END OF CENTER HOSE IN A SHOP TOWEL
3. DISCHARGE SYSTEM
   (a) Slowly open the high pressure hand valve to adjust the refrigerant flow. Do not open valve very much.

CAUTION: If refrigerant is allowed to escape too fast, compressor oil will be drawn out of the system.

(b) Check the shop towel to make sure no oil is being discharged.

If oil is present , partially close the hand valve.

(c) After the manifold gauge reading drops below 3.5 kg/cm² (50 psi, 343 kPa), slowly open the low pressure valve.

(d) As the system pressure drops, gradually open both high and low valves until both gauges read 0 kg/cm² (0 psi, 0 kPa).

Evacuating and Charging of Refrigeration System

NOTE:

- Whenever the air conditioning system has been exposed to the atmosphere, it must be evacuated.
- After installation of a component, the system should be evacuated for approximately 15 minutes. A component in service that has been opened for repair should be evacuated for 30 minutes.

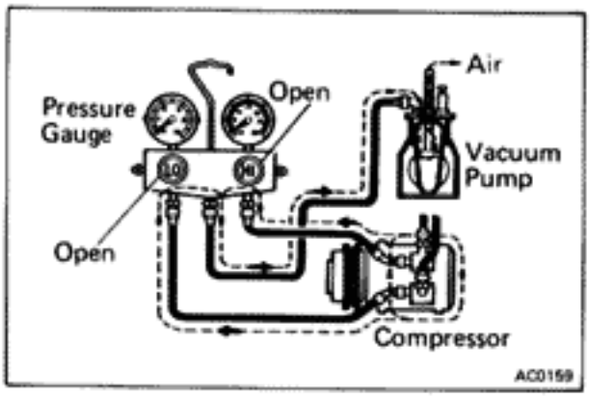

1. EVACUATE SYSTEM
   (a) Connect the manifold gauge set. (See page AC-11)
   (b) Install the center hose of gauge set on the vacuum pump inlet.
   (c) Run the vacuum pump, and then open both hand valves.
   (d) After about ten minutes, check that the low pressure gauge reads more than 600 mmHg (23.62 in. Hg, 80.0 kPa) of vacuum.

If the reading is not more than 600 mmHg (23.62 in. Hg, 80.0 kPa), close both valves and stop the vacuum pump. Check the system for leaks and repair as necessary.

If no leakage is found, continue evacuating the system.

(e) After the low pressure gauge indicates more than 700 mmHg (27.56 in. Hg, 93.3 kPa) of vacuum, continue evacuating for 15 minutes.

(f) Close both hand valves, and stop the vacuum pump. Disconnect the hose from the vacuum pump.

The system is now ready for charging.

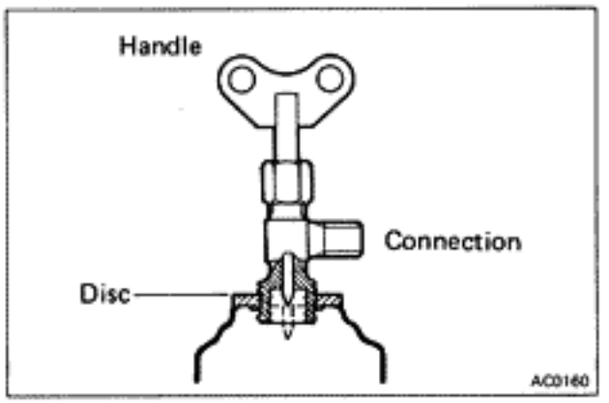

2. INSTALL REFRIGERANT CONTAINER TAP VALVE

CAUTION: Observe the precautions listed in the front of this section.

(a) Before installing the valve on the refrigerant container, turn the handle counterclockwise until the valve needle is fully retracted.

(b) Turn the disc counterclockwise until it reaches its highest position.

Screw down the valve on the refrigerant container.

(c) Connect the center hose to the valve fitting. Turn the disc fully clockwise by hand.

(d) Turn the handle clockwise to make a hole in the sealed tap.

(e) Turn the handle fully counterclockwise to fill the center hose with gas. Do not open the high and low pressure valves.

(f) Loosen the center hose nut connected to the center fitting of the manifold gauge until a hiss can be heard. Allow air to escape for a few seconds, and then tighten the nut.

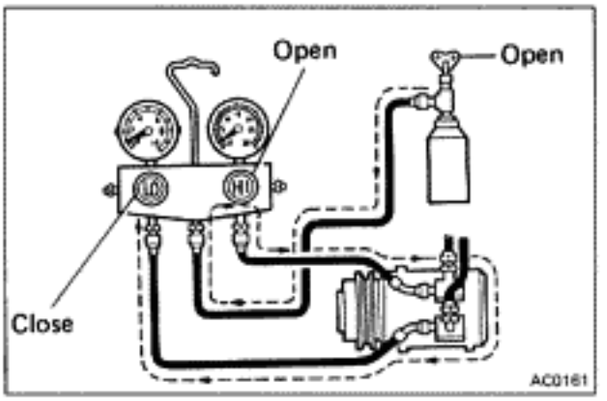

3. TEST SYSTEM FOR LEAKS

NOTE: After evacuating the system, check for leaks.

(a) Install the refrigerant container tap valve as described in step 2.

(b) Open the high pressure valve to charge the system with refrigerant vapor.

(c) When the low pressure gauge reads 1 kg/cm^2 (14 psi, 98 kPa), close the high pressure valve.

(d) Using a halide gas leak detector, propane torch, or electric leak detector, check the system for leaks.

If a leak is found, repair the faulty component or connection.

(e) After checking and repairing the system, perform the following:

- Turn the container tap handle fully clockwise.
- Disconnect the center hose from the can valve fitting.
- Evacuate the system for at least 15 minute. (See step 1 on page AC-12)

4. CHARGE EMPTY SYSTEM (LIQUID)

NOTE: This step is to charge an empty system through the high pressure side with refrigerant in a liquid state.
When the refrigerant container is held upside down, refrigerant will enter the system as a liquid.

CAUTION:

- **Never run the engine when charging the system through the high pressure side.**
- **Do not open the low pressure valve when the system is being charged with liquid refrigerant.**

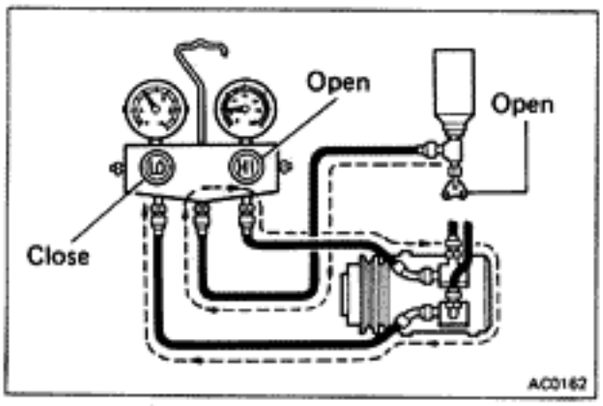

(a) Close both high and low pressure valves completely after the system is evacuated.

(b) Install refrigerant container tap valve as described in step 2.

(c) Open the high pressure valve fully, and keep the container upside down.

(d) Charge the system with more than one container (400 g, 0.9 lb) than the specified amount. Then, close the high pressure valve.

Specified amount: 650 – 750 g (1.4 – 1.7 lb)

NOTE:

- A fully charged system is indicated by the receiver sight glass being free of any bubbles.
- If the low pressure gauge does not show a reading, the system is clogged and must be repaired.

5. CHARGE EMPTY SYSTEM OR PARTIALLY CHARGED SYSTEM (VAPOR)

NOTE:

- This step is to charge the system through the low pressure side with refrigerant in a vapor state. When the refrigerant container is placed rightside up, refrigerant will enter the system as a vapor.
- Put the refrigerant container in a pan of warm water (maximum temperature 40°C or 104°F) to keep vapor pressure in the container slightly higher than vapor pressure in the system.

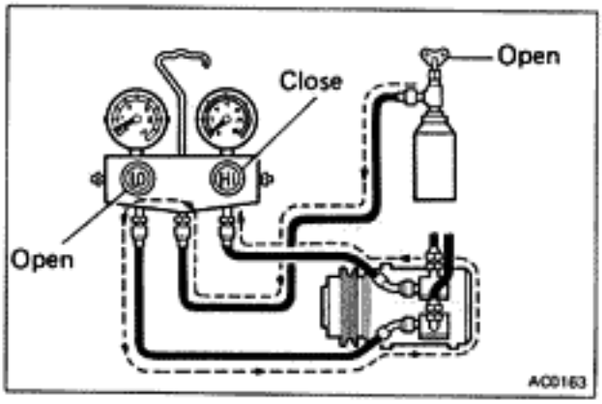

(a) Install refrigerant container tap valve as described in step 2.

(b) Open the low pressure valve. Adjust the valve so that the low pressure gauge does not read over 4.2 kg/cm² (60 psi, 412 kPa).

(c) Run the engine at fast idle, and operate the air conditioner.

CAUTION: Be sure to keep the container in the upright position to prevent liquid refrigerant being charged into the system through the suction side, resulting in possible damage to the compressor.

(d) Charge the system with more than one container (400 g, 0.9 lb) than the specified amount. Then, close the low pressure valve.

Specified amount: 650 – 750g (1.4 – 1.7 lb)

NOTE: A fully charged system is indicated by the receiver sight glass being free of any bubbles.

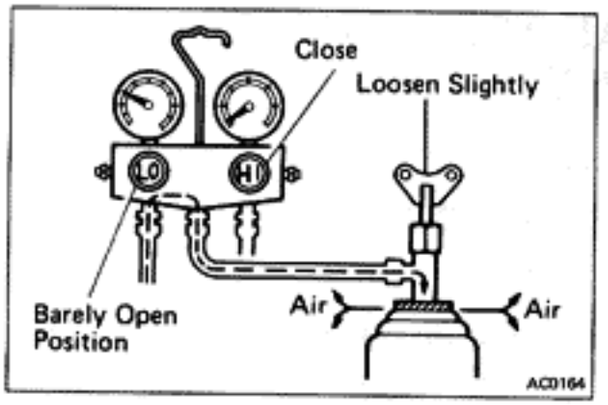

6. **IF NECESSARY, CHARGE SYSTEM WITH ANOTHER CONTAINER**

(a) When the refrigerant container is empty, close the pressure valves.

(b) Remove the container tap valve from the container.

(c) Attach the container tap valve to a new refrigerant container.

(d) Purge the air from the center hose by barely opening the low pressure valve and loosening the valve disc.

(e) Make a hole in the sealed tap of the new container and charge the system.

CAUTION: Be careful not to overcharge the refrigerant as it may cause failure of the bearings and belt.

7. **WHEN SYSTEM IS FULLY CHARGED, DISCONNECT MANIFOLD GAUGE SET**

(a) Close both low and high pressure valves.

(b) Close valve at refrigerant container. If using one pound containers of R-12, allow remaining refrigerant to escape by slowly removing the charge line.

(c) Turn off the engine.

(d) Using a shop rag, quickly remove both hoses from the compressor service valves.

WARNING: Care must be taken to protect eyes and skin when removing the high pressure hose.

(e) Put the cap nuts on the service valve fittings.

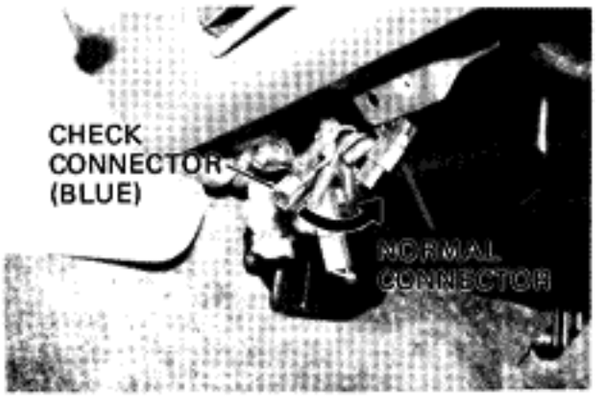

FUNCTIONAL TEST AND ADJUSTMENT

Vacuum Circuit

ON-VEHICLE INSPECTION

1. REMOVE UNDERCOVER

2. DISCONNECT FROM NORMAL CONNECTOR AND RECONNECT TO CHECK CONNECTOR OF AMPLIFIER

3. PLACE TEMPERATURE CONTROL LEVER AT 77

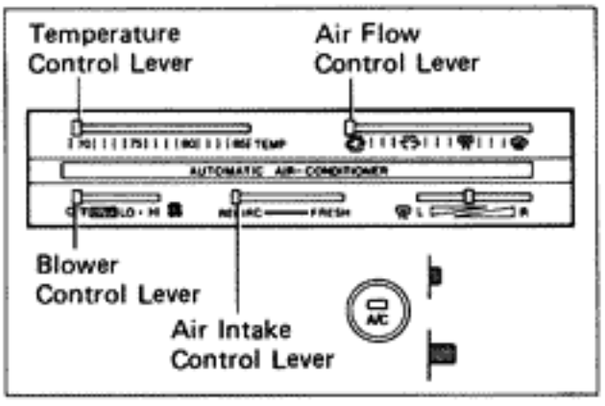



4. CHECK VACUUM CIRCUIT
   (a) Run the engine and observe the movement of the power servo stem visually for one minute or more. The stem must be stable.
   (b) If the stem moves, check the vacuum circuit for leaks.

5. REINSTALL UNDERCOVER

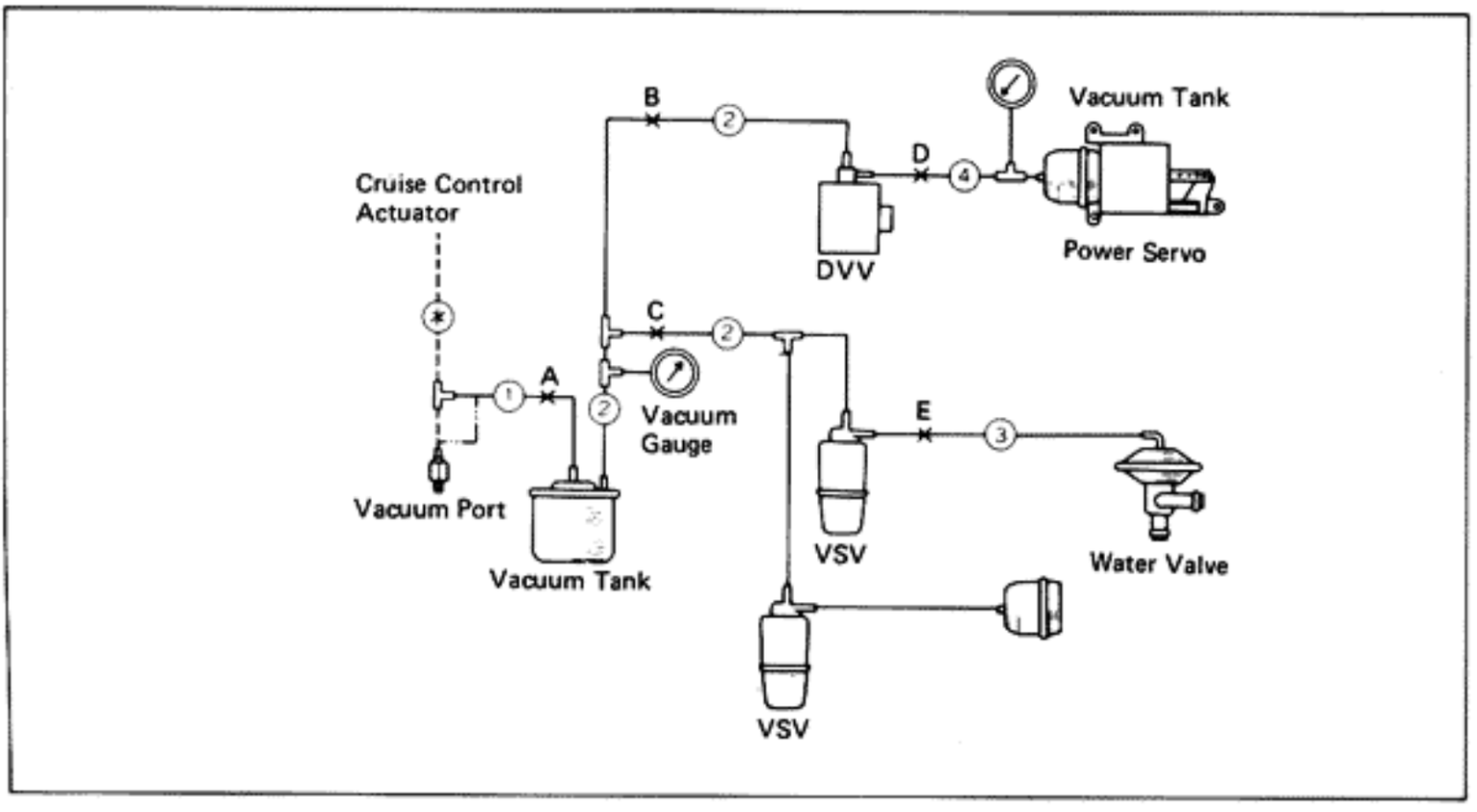

Power Servo Unit Operation

ON-VEHICLE INSPECTION

1. REMOVE COMPONENTS FROM VEHICLE
   (a) Undercover
   (b) Center cluster

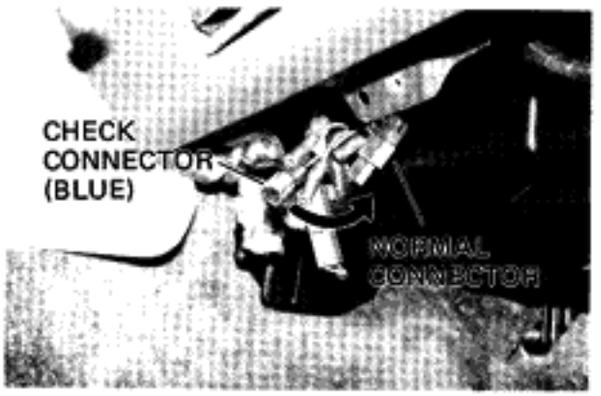

2. RECONNECT TO CHECK CONNECTOR
3. RUN ENGINE AT IDLING
4. PLACE BLOWER CONTROL LEVER AT AUTO
   AIR FLOW CONTROL LEVER AT VENT
   TEMPERATURE CONTROL LEVER AT 77

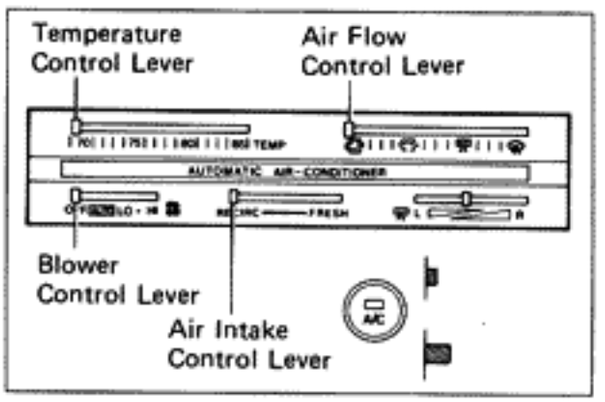

5. CHECK BLOWER SPEED CONTROL BY SLIDING TEMPERATURE CONTROL LEVER
   (a) When sliding the lever to 70, the blower speed will change in five steps.
   (b) When sliding the lever to 85, the blower speed will change in four steps.

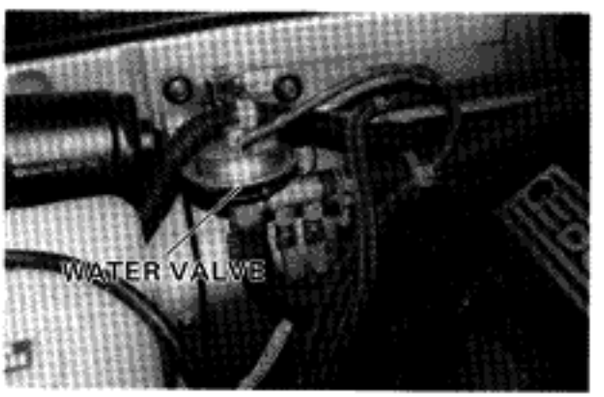

6. CHECK WATER VALVE OPERATION BY SLIDING TEMPERATURE CONTROL LEVER
   (a) When placing the lever at the left side fully, the water valve will close.
   (b) When placing the lever at 75 or more, the water valve will open.



7. CHECK POWER SERVO STEM FOR A SMOOTH OPERATION BY SLIDING TEMPERATURE CONTROL LEVER
8. REINSTALL UNDERCOVER AND CENTER CLUSTER

Automatic Temperature Control

ON-VEHICLE INSPECTION

1. REMOVE COMPONENTS FROM VEHICLE
   (a) Undercover
   (b) Center cluster

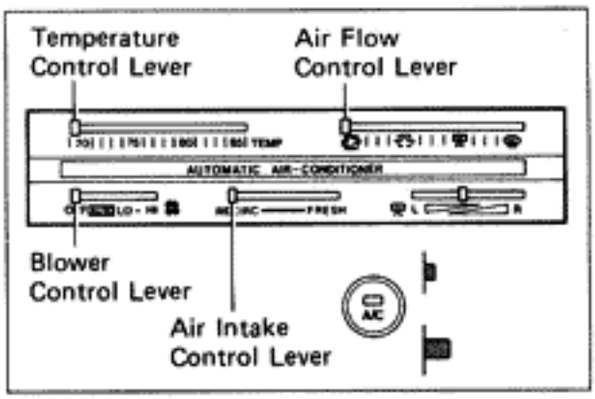

2. RECONNECT TO CHECK CONNECTOR
3. PLACE TEMPERATURE CONTROL LEVER AT 77
4. RUN ENGINE AT IDLING

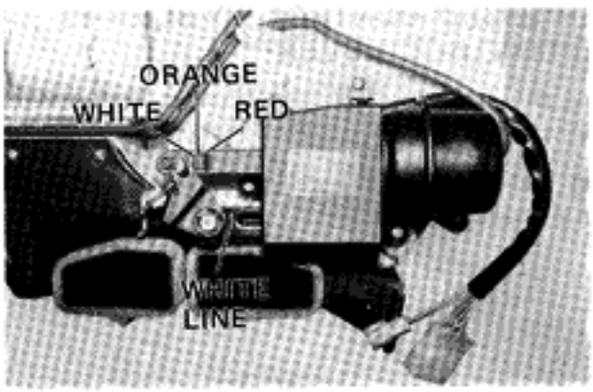

5. CHECK AUTOMATIC TEMPERATURE CONTROL
   (a) Verify that the white line marked on the stem is positioned within the orange area on the power servo unit.
   (b) If the white line positions are not in the orange area, adjust as follows:

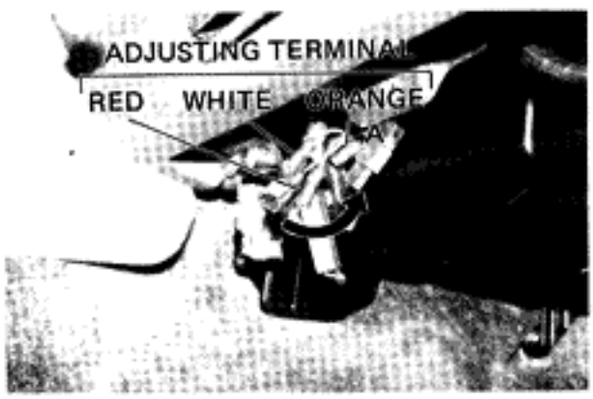

6. ADJUST AUTOMATIC TEMPERATURE CONTROL
   (a) Normally the orange adjusting terminal is connected.
   (b) If the white line on the stem is in the red area, change the connection to the red adjusting terminal.
   (c) If the white line is within the white area, change the connection to the white adjusting terminal.
7. REINSTALL REMOVED PARTS IN REVERSE ORDER

Air Mix Damper Linkage

1. REMOVE COMPONENTS FROM VEHICLE
   (a) Undercover
   (b) Center cluster

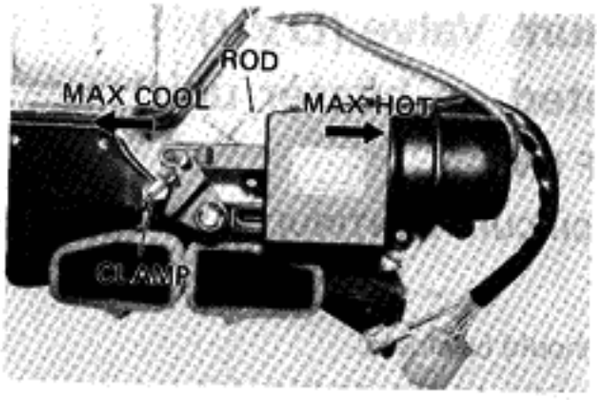

2. CHECK AIR MIX DAMPER
   (a) Disconnect the rod from the clamp.
   (b) Disconnect the No. 4 vacuum hose between the DVV and vacuum motor in the power servo unit to release the vacuum pressure in the vacuum motor.
   The stem of the power servo extends fully to the maximum cooling position.
   (c) Position the damper to maximum cooling and connect the rod to the clamp.
   (d) Using a commercial vacuum pump, apply 250 mmHg (9.84 in.Hg, 33.3 kPa) of vacuum to the vacuum motor and verify that the damper moves to the maximum heating position.

3. REINSTALL REMOVED PARTS IN REVERSE ORDER

Sensor Circuit

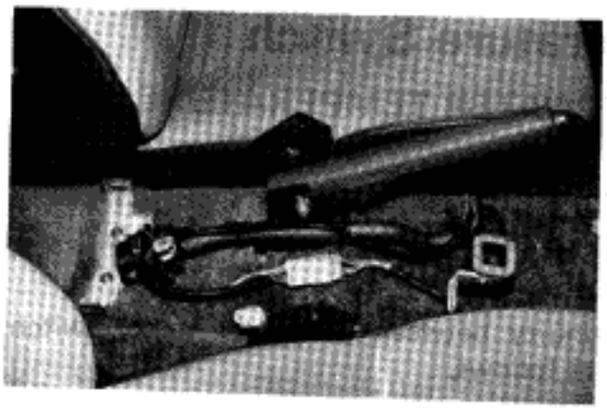

1. IN-CAR SENSOR
   (Located in console box)
   Check sensor resistance.
   1.7 – 5.6 kΩ (0 – 25°C or 32 – 77°F)

2. VERIFY AIR IS SUCKED IN IN-CAR SENSOR
   NOTE: If there is an open circuit in the sensor, the system will operate at maximum heating.
   Conversely, if there is a short in the system, it will operate at maximum cooling.

3. AMBIENT SENSOR
   (Located on condenser)
   Check sensor resistance.
   0.4 – 0.6 kΩ (0 – 25°C or 32 – 77°F)

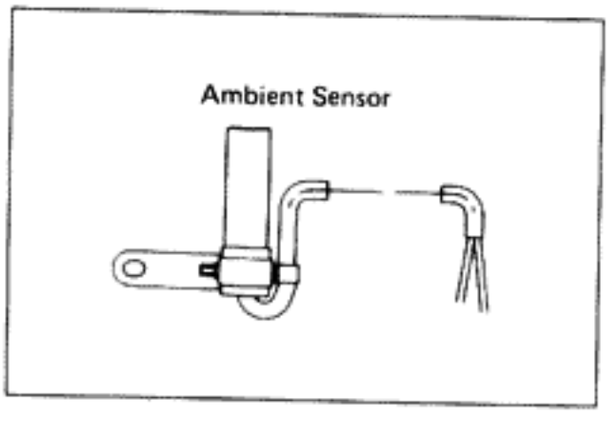

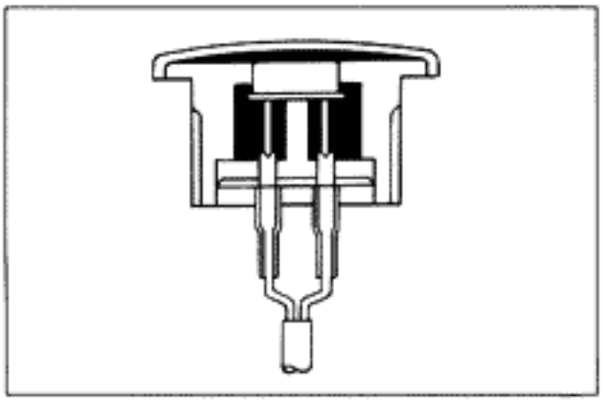

4. **SOLAR SENSOR**

Check sensor voltage.

0.3 – 0.5V (In Daylight)

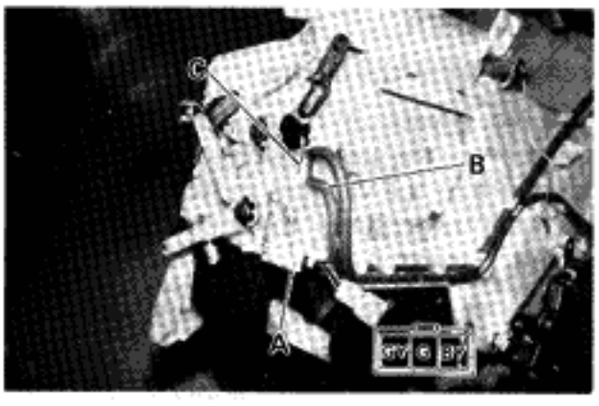

Double Vacuum Valve (DVV) (DVV is located on heater unit)

INSPECTION OF DVV

CHECK VACUUM CIRCUIT CONTINUITY BY BLOWING AIR

(a) OFF state
All circuit should be closed.

(b) Apply 12 volts to the positive (+) terminal and ground terminal T_1.
There should be continuity between B and C at this time.

(c) Apply 12 volts to the positive (+) terminal and ground terminal T_2. There should be continuity between A and B at this time.

If a problem is found, replace the DVV.

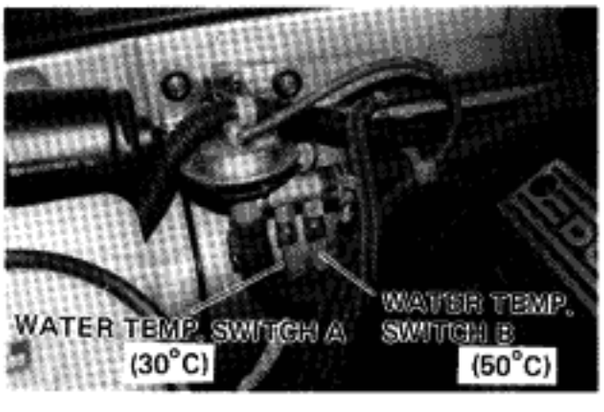

Water Temperature Switch

INSPECTION OF WATER TEMPERATURE SWITCH

CHECK WATER TEMPERATURE SWITCH OPERATION

(a) Disconnect the 1-pole connector from the water temp. switch.

(b) Check continuity between the water temp. switch and ground as follows.

Coolant temp.	A	B
Less than 30°C (86°F)	CONTINUITY	CONTINUITY
From 30°C (86°F) to 50°C (122°F)	NO CONTINUITY	NO CONTINUITY
More than 50°C (122°F)	NO CONTINUITY	NO CONTINUITY

If a problem is found, replace water valve.

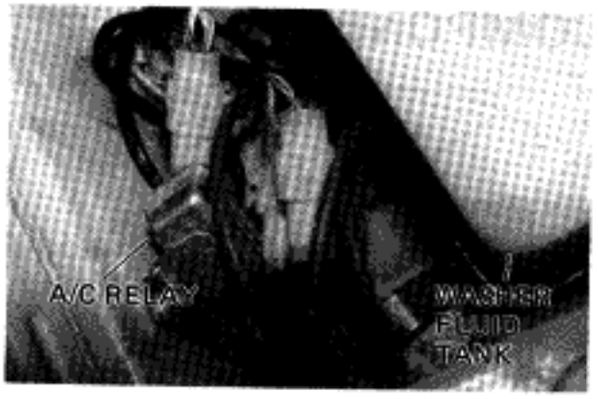

Condenser Motor

(See page AC-9)

ON-VEHICLE INSPECTION

1. CHECK CONDENSER MOTOR OPERATION

   NOTE: When the air conditioner is on, the condenser motor must rotate.

2. CHECK A/C RELAY OPERATION

   NOTE: When the air conditioner is on, the A/C relay must come on.

   If a problem is found, replace defective part.

SYSTEM COMPONENTS

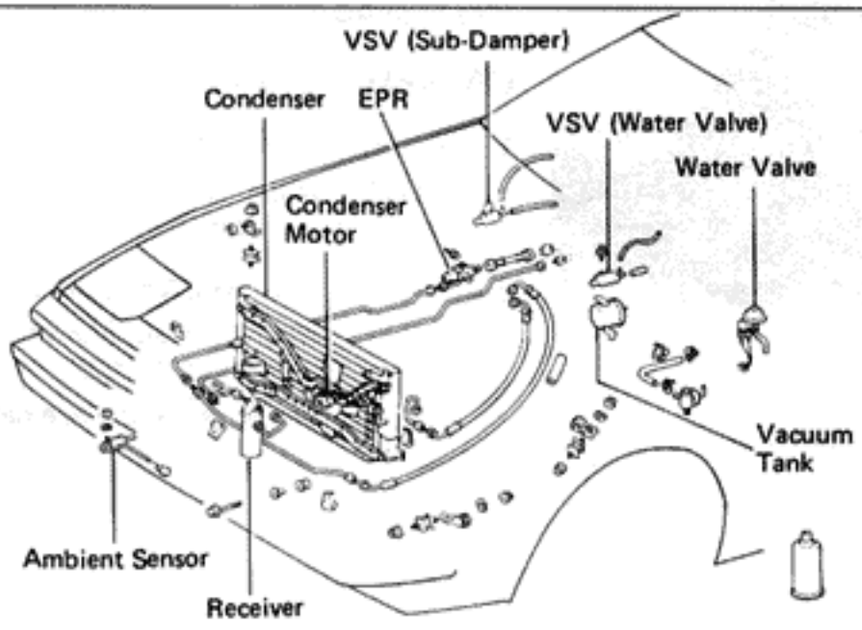

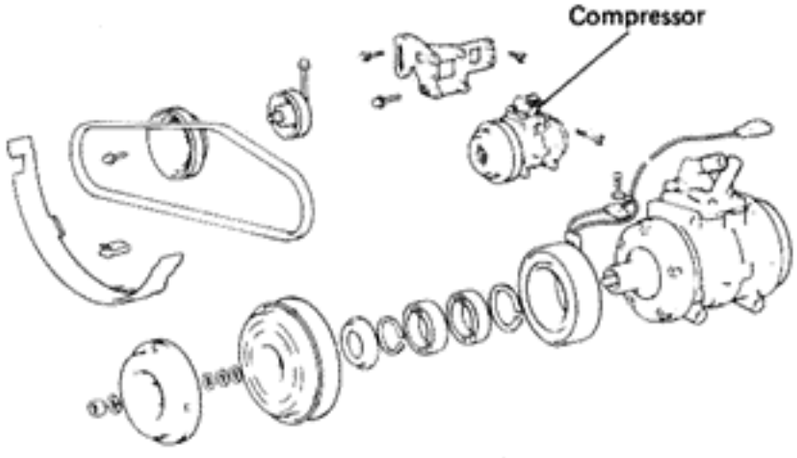

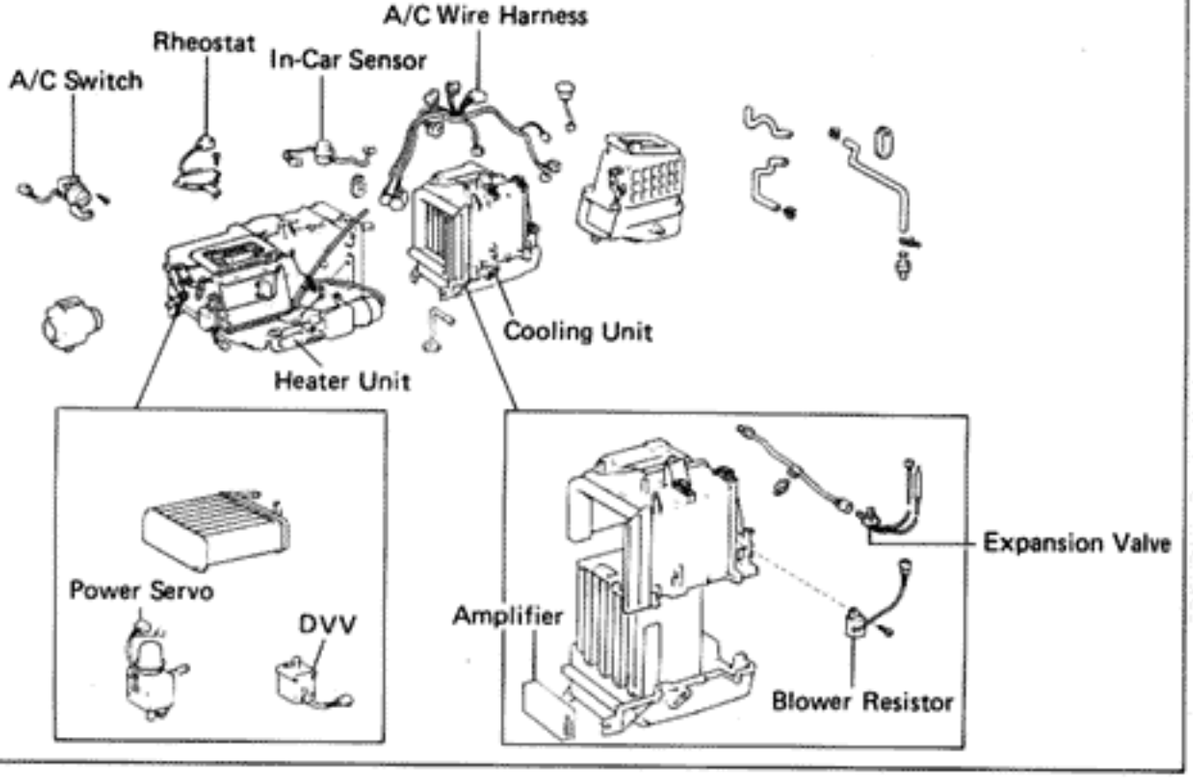

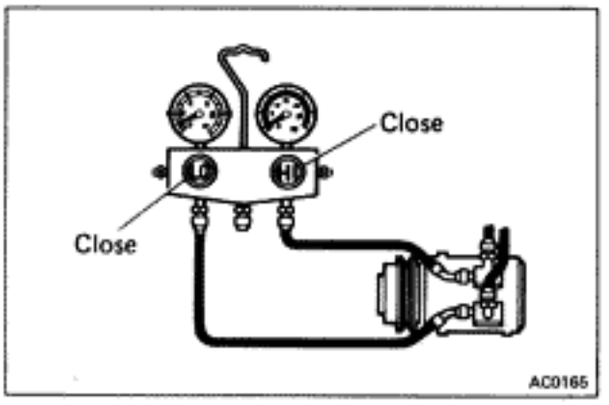

COMPRESSOR

(See page AC-22)

ON-VEHICLE INSPECTION

1. INSTALL MANIFOLD GAUGE SET
   (a) Close the HI and LO hand valves.
   (b) Connect the high pressure hose to the discharge service valve of the compressor.
   (c) Connect the low pressure hose to the suction service valve of the compressor.
2. RUN ENGINE AT FAST IDLE
3. CHECK COMPRESSOR FOR FOLLOWING:
   (a) High pressure gauge reading is not low and low pressure gauge reading is not higher than normal.
   (b) Metallic sound
   (c) Leakage from the shaft seal

   If defects are found, repair the compressor.
4. CHECK MAGNETIC CLUTCH
   (a) Inspect the pressure plate and the rotor for signs of oil.
   (b) Check the clutch bearings for noise and grease leakage.
   (c) Using an ohmmeter, measure the resistance of the stator coil between the clutch lead wire and ground.

   If the resistance is not within tolerance, replace the coil.

   Standard resistance: 3.7 ± 0.2 Ω at 20°C (68°F)

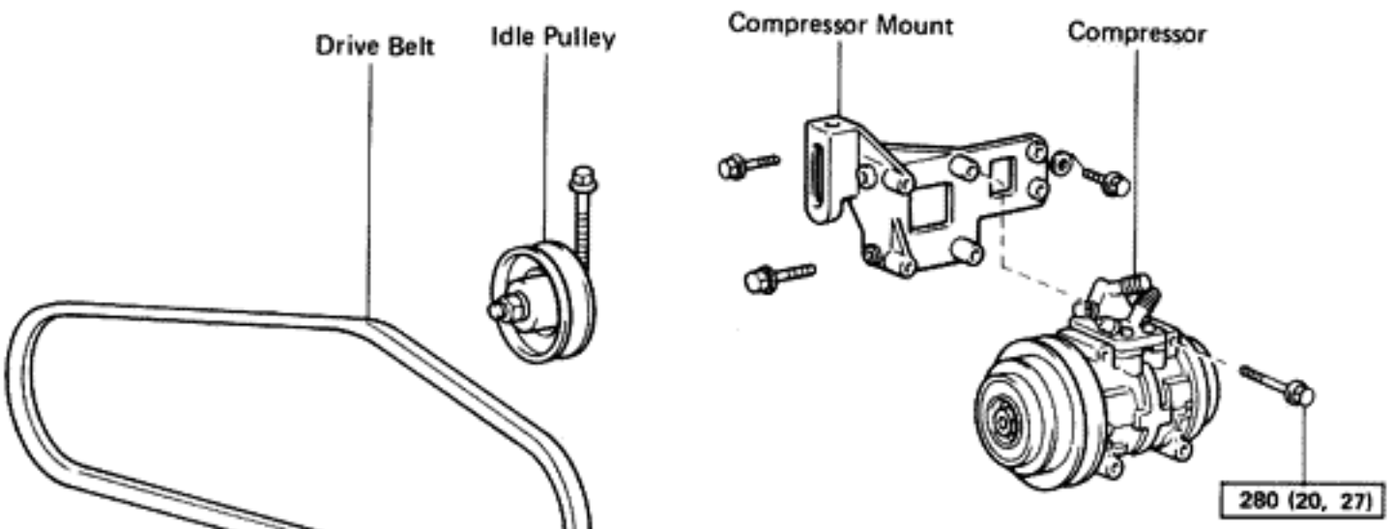

kg-cm (ft-lb, N-m) : Specified torque

REMOVAL OF COMPRESSOR

1. RUN ENGINE AT IDLE WITH AIR CONDITIONING ON FOR 10 MINUTES
2. DISCONNECT NEGATIVE CABLE FROM BATTERY
3. DISCONNECT CLUTCH LEAD WIRE FROM WIRING HARNESS
4. DISCHARGE REFRIGERANT FROM REFRIGERATION SYSTEM (See page AC-12)
5. DISCONNECT TWO FLEXIBLE HOSES FROM COMPRESSOR SERVICE VALVES

   Cap the open fitting immediately to keep moisture out of the system.
6. REMOVE COMPRESSOR
   (a) Loosen the drive belt.
   (b) Remove the compressor mounting bolts and the compressor.

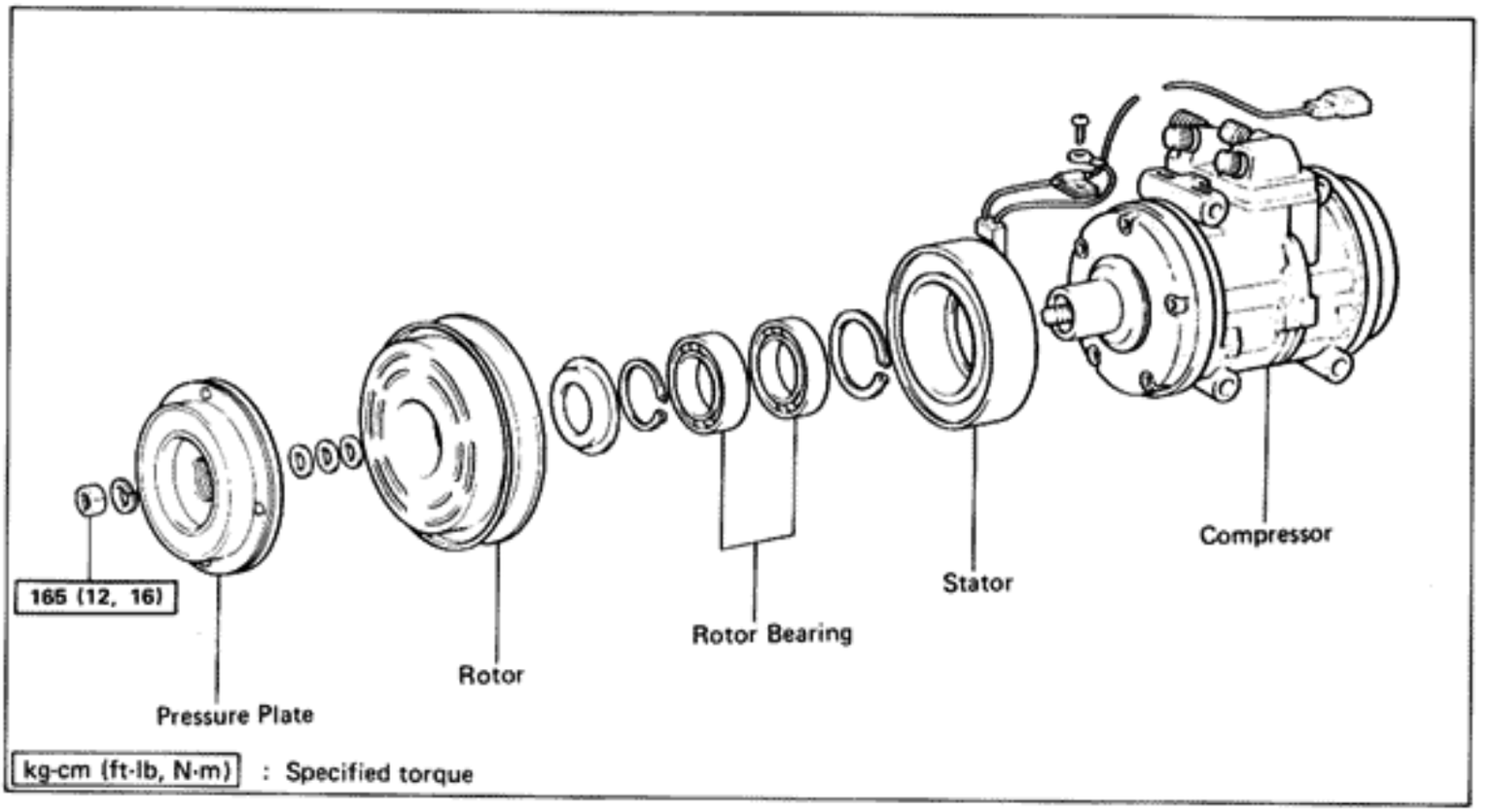

DISASSEMBLY OF MAGNETIC CLUTCH

1. REMOVE PRESSURE PLATE

(a) Using SST and a socket, remove the shaft nut.
SST 07110-77011



(b) Using SST and a socket, remove the pressure plate.
SST 07112-71010



(c) Remove the shims from the shaft.



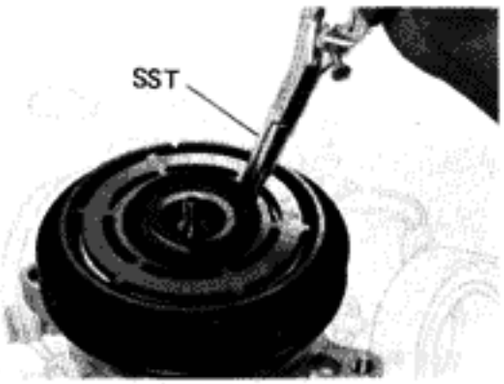

2. **REMOVE ROTOR**

(a) Using SST, remove the snap ring.

SST 07114-84020



(b) Using a plastic hammer, tap the rotor off the shaft.

CAUTION: Be careful not to damage the pulley when tapping on the rotor.

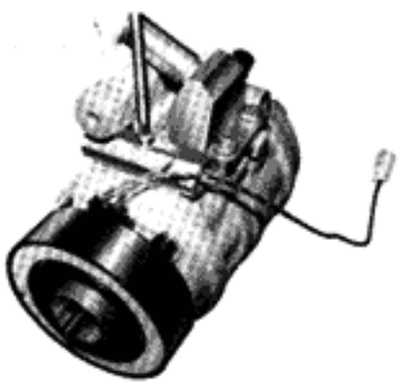

3. **REMOVE STATOR**

(a) Disconnect the stator lead wires from the compressor housing.

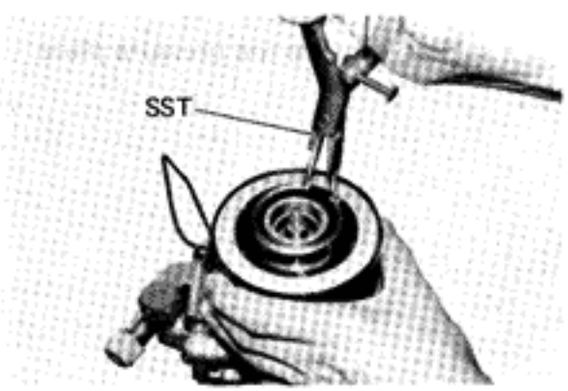

(b) Using SST, remove the snap ring. Remove the stator.

SST 07114-84020

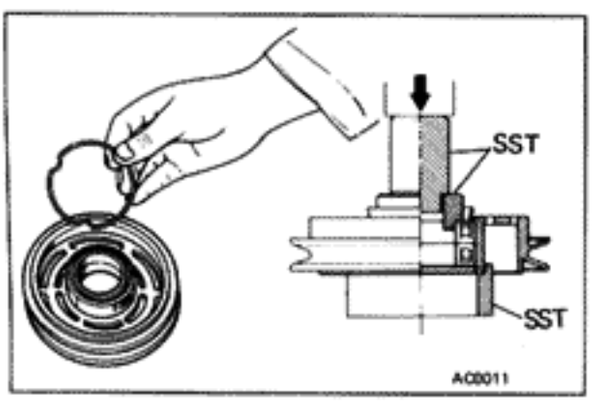

4. **REMOVE ROTOR BEARINGS**

NOTE: Press the bearings out only if they are to be replaced.

(a) Remove the bearing snap ring from the rotor.

(b) Using SST, press out the two bearings.

SST 07110-77011

5. INSPECT PRESSURE PLATE AND ROTOR

(a) Inspect the pressure plate and rotor surfaces for wear and scoring. Replace if necessary.

(b) Check the rotor bearings for wear and leakage of grease. Replace if necessary.

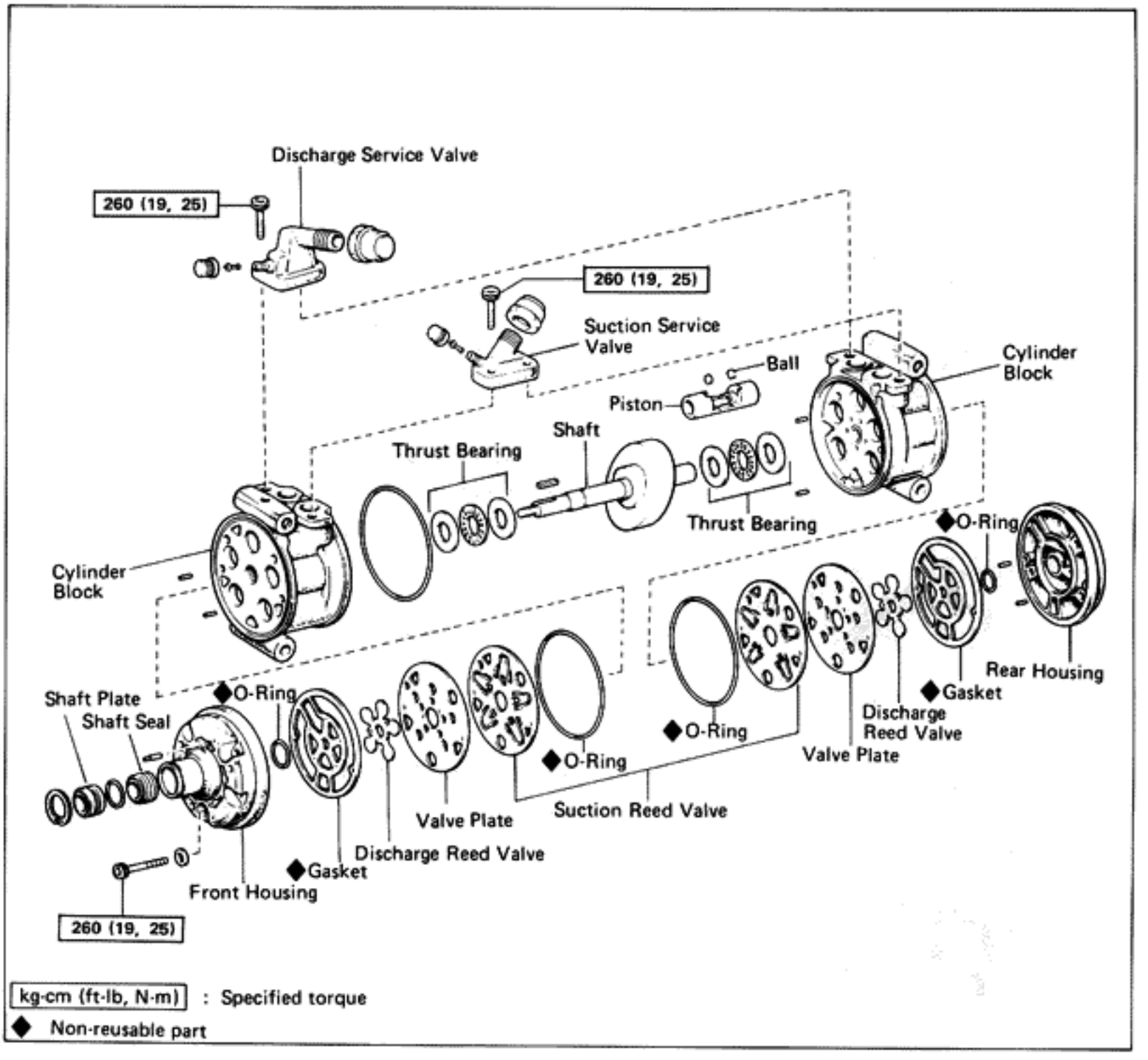

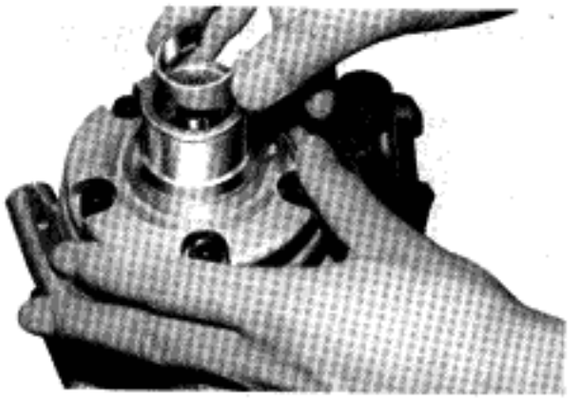

DISASSEMBLY OF COMPRESSOR

1. REMOVE FELT

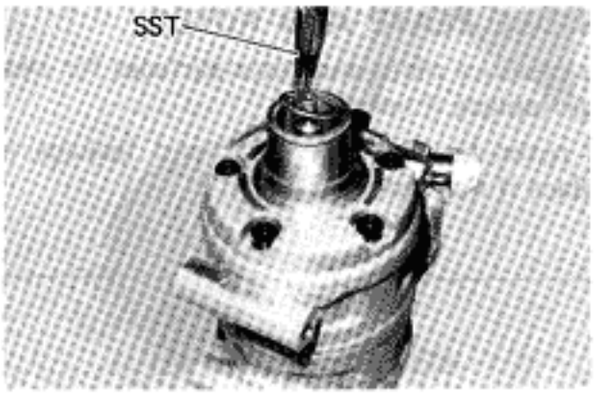

2. REMOVE CIRCLIP

Using SST, remove the circlip.

SST 07114-84020

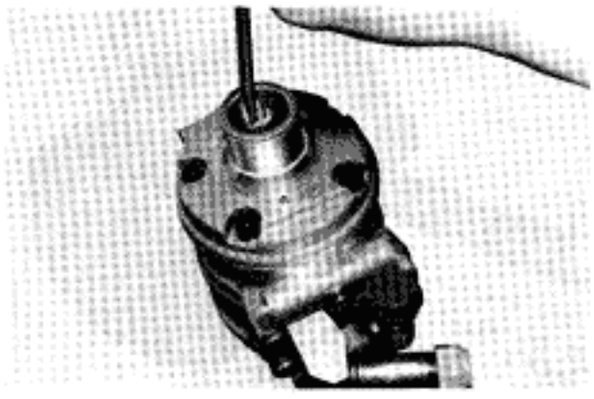

3. REMOVE KEY

Using a hammer and punch, drive the key from the shaft.



4. APPLY COMPRESSOR OIL TO INNER BORE

Apply compressor oil to the inner bore of the compressor.

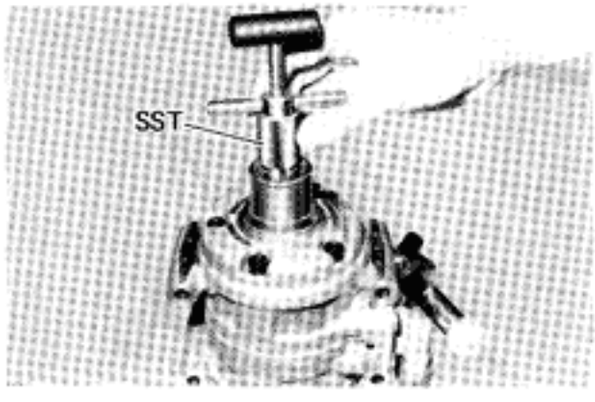

5. REMOVE SHAFT PLATE

(a) Insert SST against the shaft. Then push the holder ring downward.

SST 07112-15010

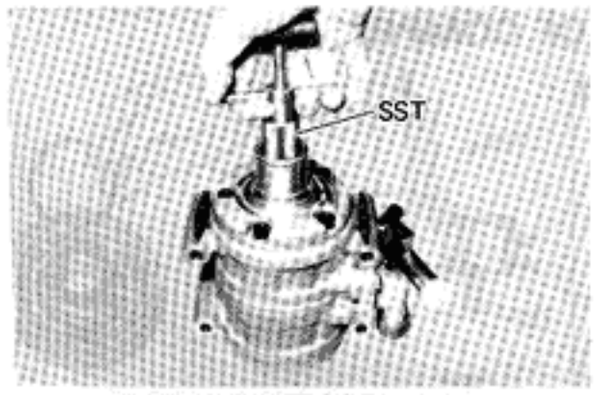

(b) Pull up the bar of the remover, and remove the shaft plate.

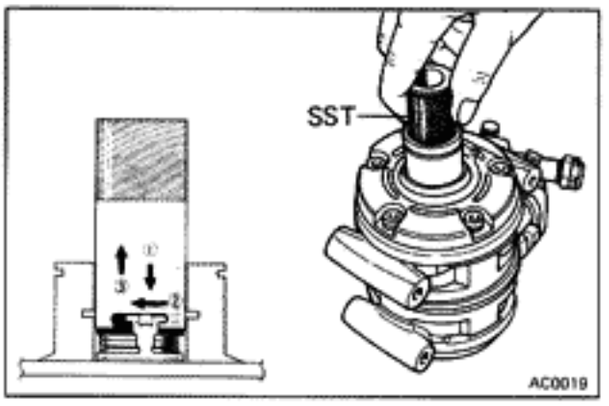

6. REMOVE SHAFT SEAL

Insert SST against the shaft, and turn it clockwise while pressing in the remover.

Then remove the shaft seal.

SST 07114-15010

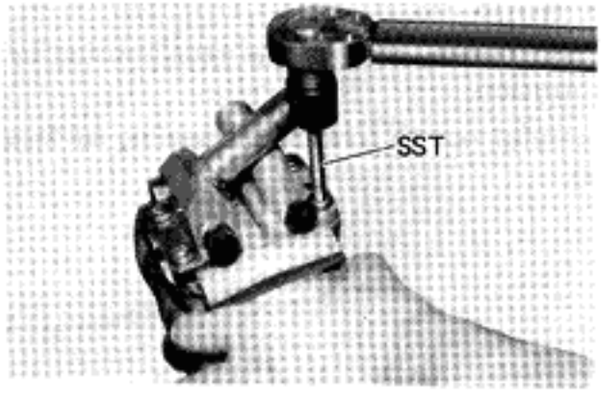

7. REMOVE TWO SERVICE VALVES

(a) Using SST, remove the bolts holding the two service valves.

SST 07110-61050

(b) Remove the O-rings from the service valves and discard them.

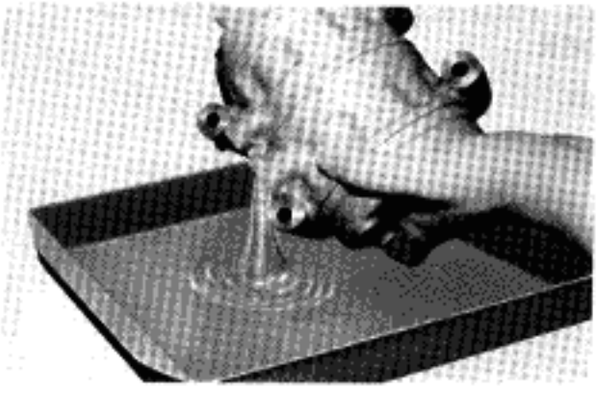

8. DRAIN OIL INTO CONTAINER

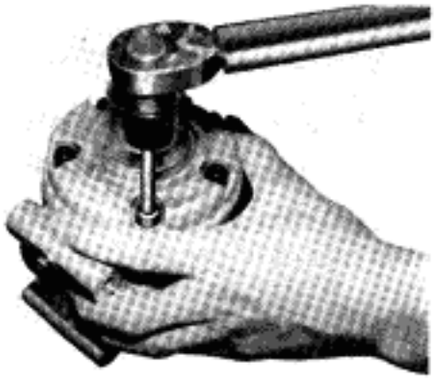

9. REMOVE FRONT HOUSING

(a) Using SST, remove the six through bolts.

NOTE: Do not reuse the six washers.

SST 07110-61050

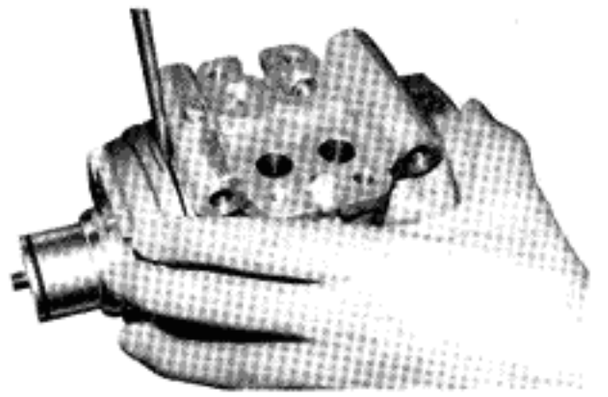

(b) Using a hammer and punch, remove the front housing by tapping on the protrusion.

CAUTION: Be careful not to scratch the sealing surface of the front housing.



10. REMOVE FRONT VALVE PLATE

Remove the two pins from the front housing. Discard the pins.

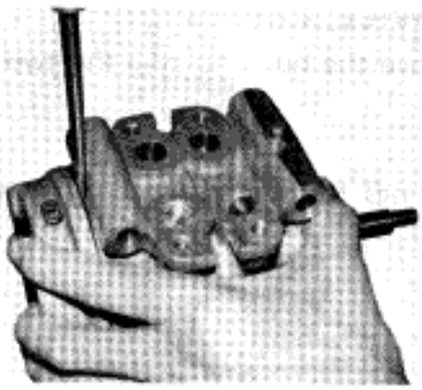

11. REMOVE REAR HOUSING

Using a hammer and punch, remove the rear housing by tapping on the protrusion.

CAUTION: Be careful not to scratch the sealing surface of the rear housing.

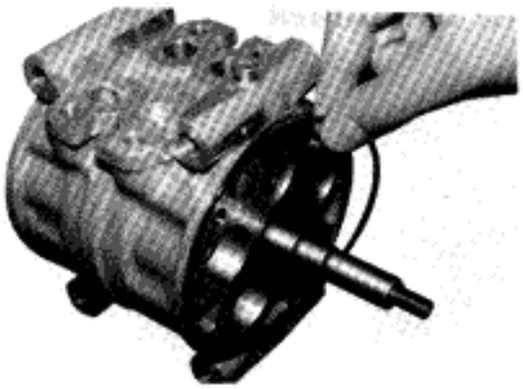

12. REMOVE FRONT AND REAR O-RINGS FROM CYLINDER BLOCK

Discard the O-rings.

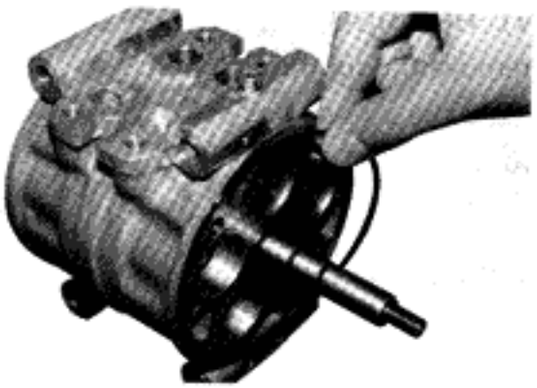

ASSEMBLY OF COMPRESSOR

(See page AC-27)

1. INSTALL REAR VALVE PLATE ON REAR CYLINDER

(a) Install the two pins in the rear cylinder.

(b) Lubricate a new O-ring with compressor oil. Install the O-ring in the rear cylinder.

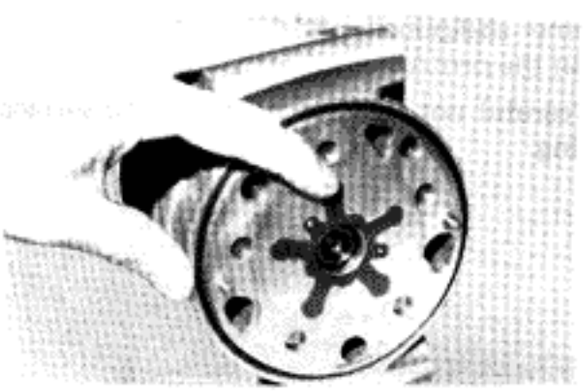

(c) Install the rear suction valve over the pins on the rear cylinder.

NOTE: The front and rear suction valves are the same.

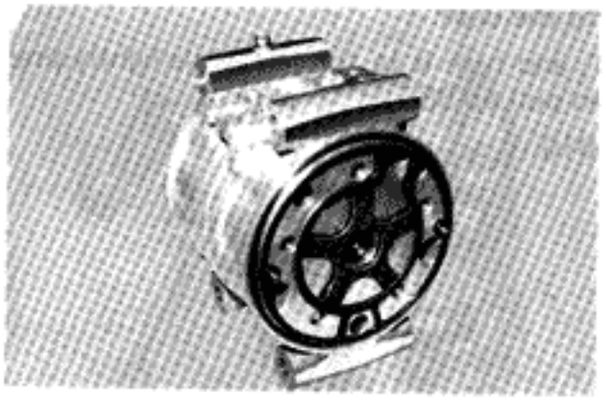

(d) Install the rear valve plate together with the discharge valve over the pins on the rear cylinder.

NOTE: The rear valve plate is marked "R".

(e) Lubricate the gasket with compressor oil. Install the gasket on the valve plate.

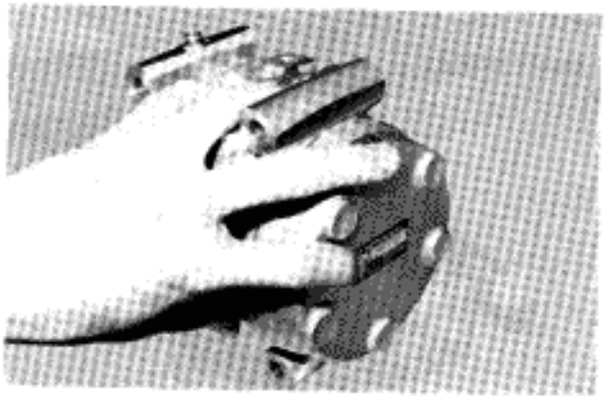

2. INSTALL REAR HOUSING ON REAR CYLINDER

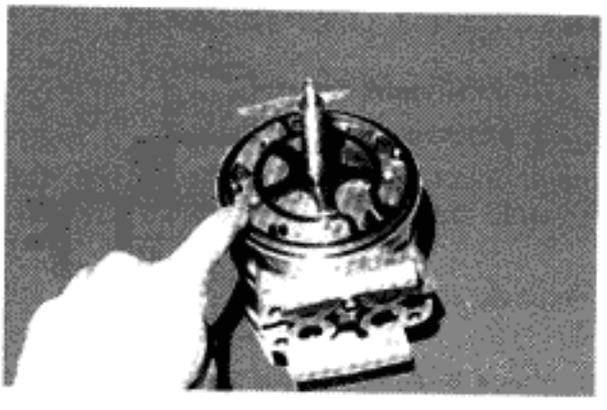

3. INSTALL FRONT VALVE PLATE ON FRONT CYLINDER

(a) Install the two pins in the front cylinder.

(b) Lubricate a new O-ring with compressor oil. Install the O-ring in the rear housing.

(c) Install the front suction valve over the pins on the front cylinder.

(d) Install the front valve plate together with the discharge valve over the pins on the front cylinder.

NOTE: The front valve plate is marked with an "F".

(e) Lubricate gasket with compressor oil. Install the gasket on the valve plate.

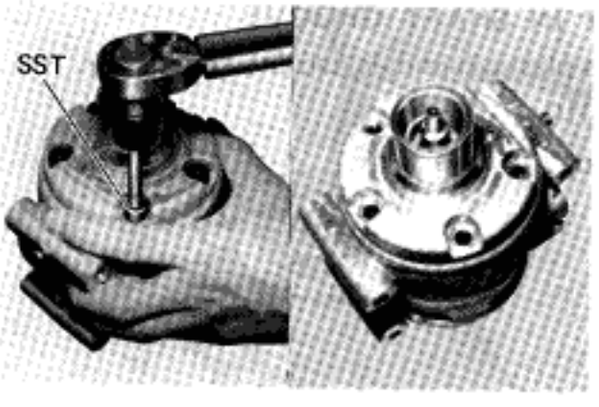

4. INSTALL FRONT HOUSING ON FRONT CYLINDER AND TIGHTEN SIX THROUGH BOLTS

Using SST and a torque wrench, gradually tighten the six through bolts in two or three passes.

SST 07110-61050

Torque: 260 kg-cm (19 ft-lb, 25 N·m)

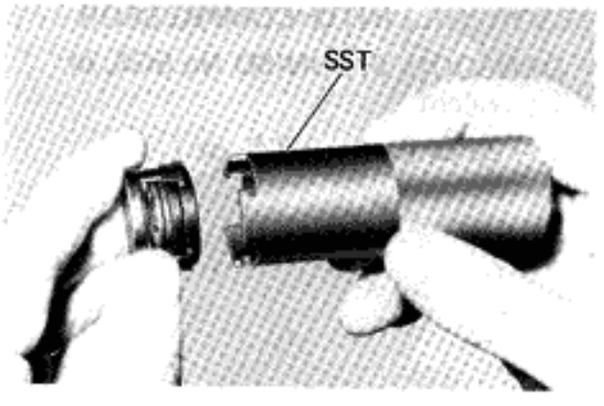

5. INSTALL SHAFT SEAL

(a) Fit the shaft seal to SST.

SST 07114-15010

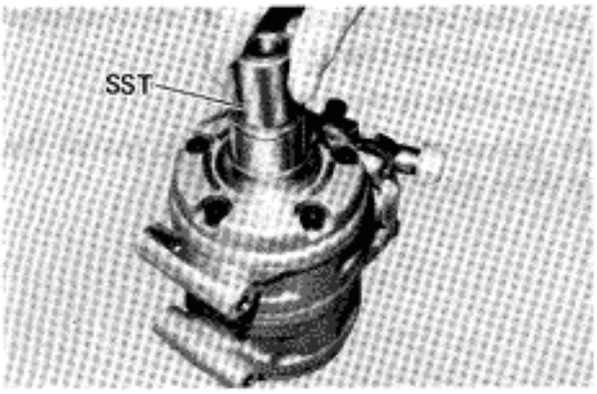

(b) Apply oil to the bore.

Insert SST, and turn it to the left while lightly pressing in. Then pull up SST.

SST 07114-15010

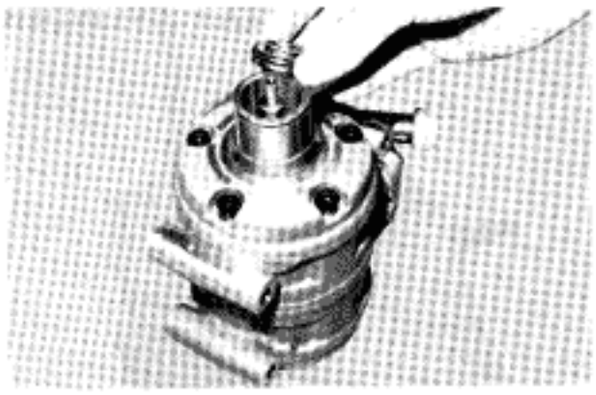

6. INSTALL SHAFT PLATE

(a) Put on the shaft plate.

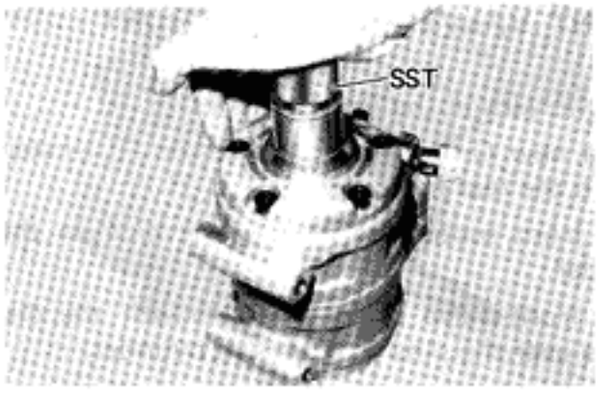

(b) Press in SST.

SST 07112-25010

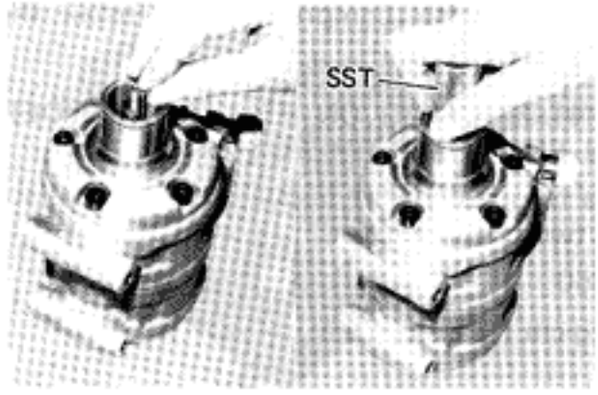

7. INSTALL KEY IN SHAFT GROOVE

Using SST and a plastic hammer, tap the key lightly.

SST 07114-45010

Put the felt inside the bore.



8. POUR COMPRESSOR OIL INTO COMPRESSOR

Compressor oil: DENSOOIL 6, SUNISO No.5GS, or equivalent

Refill capacity: 10 – 20 cc (0.3 – 0.7 fl. oz.)

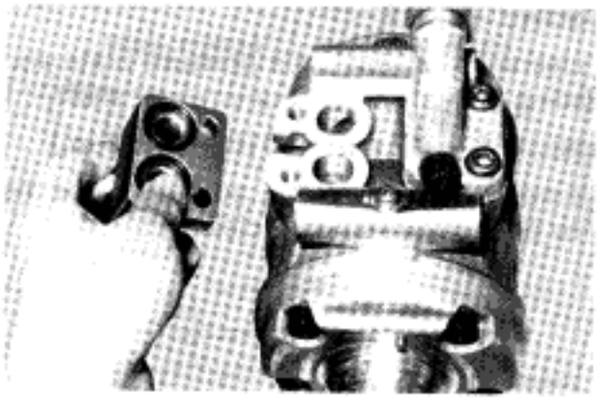

9. INSTALL SERVICE VALVES

(a) Lubricate new O-rings with compressor oil. Install the O-rings in the service valves.

(b) Install the service valves on the compressor. Using SST and a torque wrench, tighten the bolts.

SST 07110-61050

Torque: 260 kg-cm (19 ft-lb, 25 N·m)

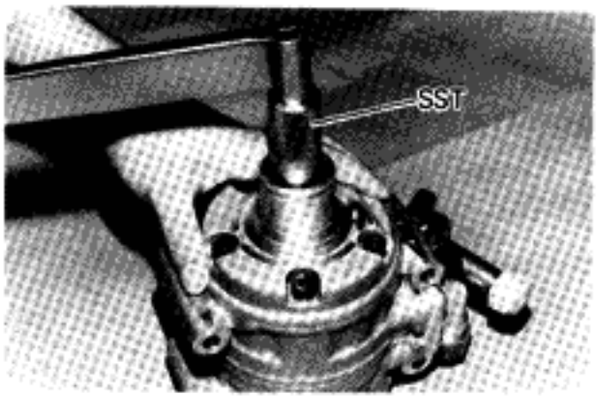

10. CHECK SHAFT STARTING TORQUE

Torque: 30 kg-cm (26 in.-lb, 2.9 N·m) or less

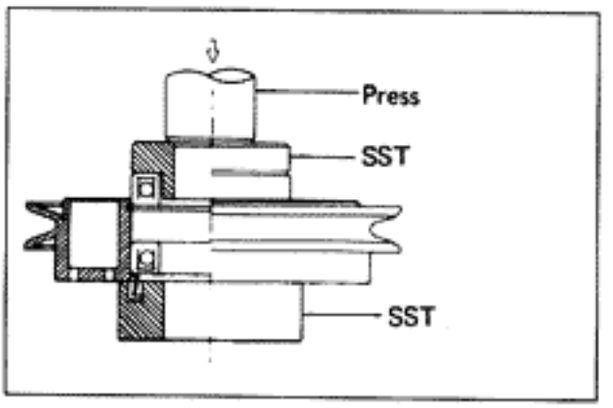

ASSEMBLY OF MAGNETIC CLUTCH

(See page AC-24)

1. INSTALL TWO BEARINGS IN ROTOR

(a) Using SST, press a shield ring and two new bearings into the rotor boss until fully seated.

SST 07110-77011

(b) Install the bearing snap ring into the rotor groove.

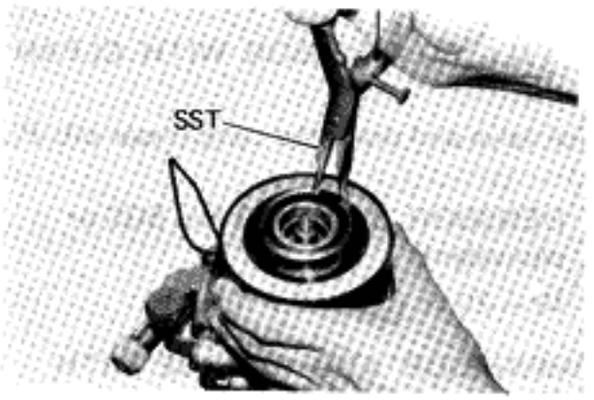

2. INSTALL STATOR

(a) Install the stator on the compressor.

(b) Using SST, install the snap ring.

SST 07114-84020

(c) Connect the stator lead wires to the compressor housing.

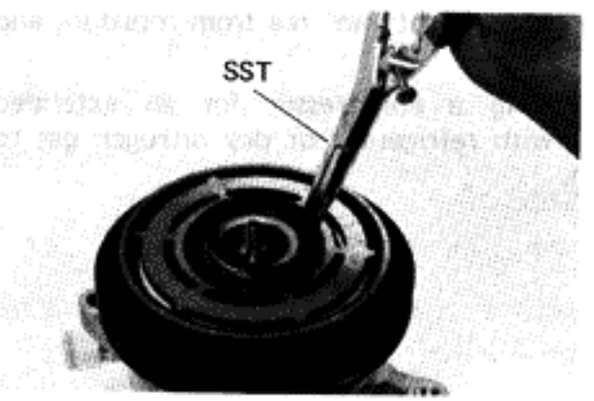

3. INSTALL ROTOR

(a) Install the rotor on the compressor shaft.

(b) Using SST, install the snap ring.

SST 07114-84020



4. INSTALL PRESSURE PLATE

(a) Adjust the clearance between the pressure plate and rotor by placing shims on the compressor shaft.

Standard clearance: 0.4 – 0.7 mm (0.016 – 0.028 in.)

If the clearance is not within tolerance, add or reduce the number of shims to obtain the standard clearance.

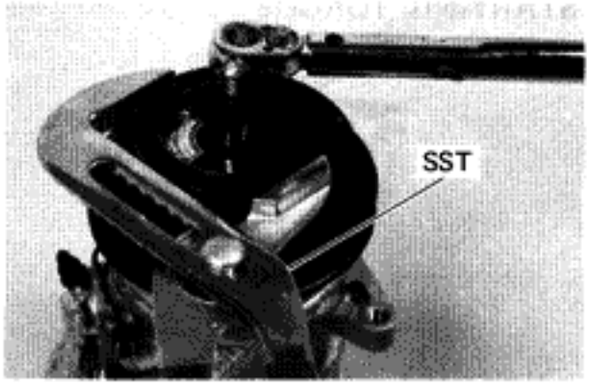

(b) Using SST and a torque wrench, install the shaft nut.

SST 07110-77011

Torque: 165 kg-cm (12 ft-lb, 16 N-m)

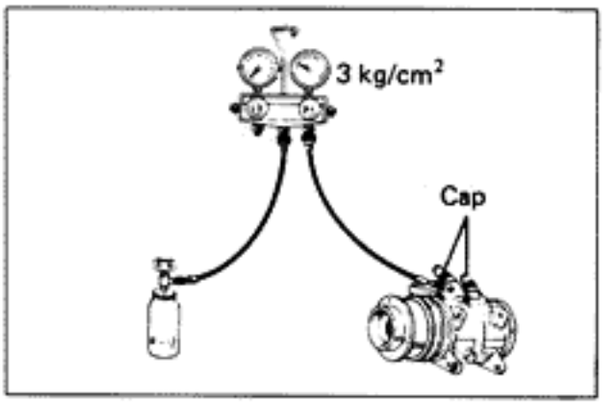

PERFORMANCE TEST OF COMPRESSOR

1. PERFORM GAS LEAKAGE TEST

(a) Put caps on both service valves.

(b) Charge the compressor with refrigerant through the charging valve until the pressure is 3 kg/cm² (43 psi, 294 kPa).

(c) Using a gas leak detector, check the compressor for leaks.

If leaks are found, check and replace the gasket, O-ring, or shaft seal.

2. IF NECESSARY FILL COMPRESSOR WITH CLEAN COMPRESSOR OIL

Remove the service valve and drain the compressor oil. Fill with new oil.

Compressor oil: DENSOOIL 6, SUNISO No. 5GS or equivalent

Refill capacity: 10 – 20 cc (0.3 – 0.7 fl. oz.)

3. EVACUATE COMPRESSOR AND CHARGE WITH REFRIGERANT (See page AC-12)

Make sure the caps are tight and free from moisture and contamination.

NOTE: When storing a compressor for an extended period, charge it with refrigerant or dry nitrogen gas to prevent corrosion.

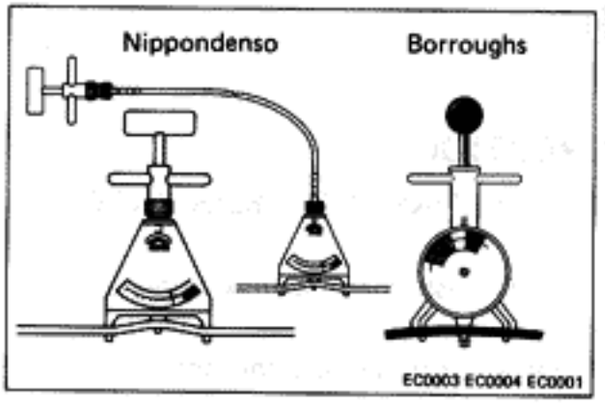

INSTALLATION OF COMPRESSOR

(See page AC-24)

1. INSTALL COMPRESSOR WITH MOUNTING BOLTS

   Torque: 280 kg-cm (20 ft-lb, 27 N·m)

2. INSTALL DRIVE BELT

   (a) Install the drive belt to the pulley.

   (b) Adjust the belt with the adjusting bolts.

   (c) Using a belt tension gauge, check the drive belt tension.

   Belt tension gauge:
   Nippondenso BTG-20 (95506-00020) or
   Borroughs No. BT-33-73F

   Drive belt tension
   New belt 125 ± 25 lb
   Used belt 80 ± 20 lb

   NOTE:
   - "New belt" refers to a belt which has been used less than 5 minutes on a running engine.
   - "Used belt" refers to a belt which has been used on a running engine for 5 minutes or more.

3. CONNECT TWO FLEXIBLE HOSES TO COMPRESSOR SERVICE VALVES

   Torque: Discharge line 225 kg-cm (16 ft-lb, 22 N·m)
   Suction line 325 kg-cm (24 ft-lb, 32 N·m)

4. CONNECT CLUTCH LEAD WIRE TO WIRING HARNESS

5. CONNECT NEGATIVE CABLE TO BATTERY

6. EVACUATE AND CHARGE REFRIGERATION SYSTEM (See page AC-12)

CONDENSER

(See page AC-22)

ON-VEHICLE INSPECTION

1. CHECK CONDENSER FINS FOR BLOCKAGE OR DAMAGE

   If the fins are clogged, wash them with a water and dry with compressed air.

   CAUTION: **Be careful not to damage the fins.**

   If the fins are bent, straighten them with screwdriver or pliers.

2. CHECK CONDENSER FITTINGS FOR LEAKAGE

   Repair as necessary.

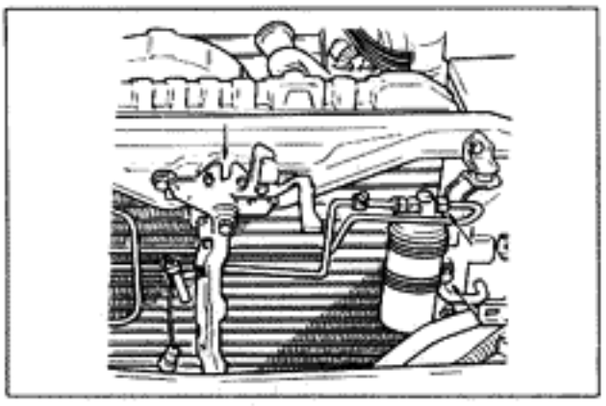

REMOVAL OF CONDENSER

1. DISCHARGE REFRIGERATION SYSTEM
   (See page AC-12)

2. REMOVE FRONT GRILLE AND HOOD LOCK BRACE

3. DISCONNECT DISCHARGE FLEXIBLE HOSE FROM CONDENSER INLET FITTING

4. DISCONNECT LIQUID LINE TUBE FROM CONDENSER OUTLET FITTING

   NOTE: Cap the open fittings immediately to keep moisture out of the system.

5. REMOVE CONDENSER

   Remove the four bolts.

INSTALLATION OF CONDENSER

1. INSTALL CONDENSER

   Install the four bolts making sure the rubber cushions fit on the mounting flanges correctly.

2. CONNECT LIQUID LINE TUBE AND DISCHARGE FLEXIBLE HOSE TO CONDENSER

   Torque:

Liquid line tube	135 kg-cm (10 ft-lb, 13 N·m)
Discharge flexible hose	225 kg-cm (16 ft-lb, 22 N·m)

3. INSTALL FRONT GRILLE AND HOOD LOCK BRACE

4. IF CONDENSER IS REPLACED, ADD COMPRESSOR OIL TO COMPRESSOR

   Add 25 – 30 cc (0.8 – 1.0 fl. oz.)

5. EVACUATE, CHARGE AND TEST REFRIGERATION SYSTEM (See page AC-12)

RECEIVER

(See page AC-22)

ON-VEHICLE INSPECTION

CHECK SIGHT GLASS, FUSIBLE PLUG AND FITTINGS FOR LEAKAGE

Use a gas leak tester. Repair as necessary.

REMOVAL OF RECEIVER

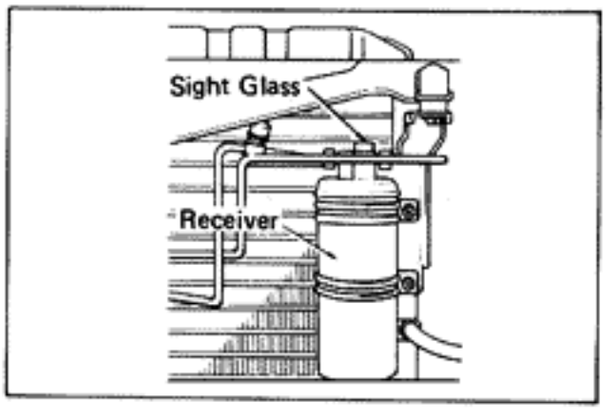

1. DISCHARGE REFRIGERATION SYSTEM
(See page AC-12)

2. DISCONNECT TWO LIQUID LINE TUBES FROM RECEIVER

NOTE: Cap the open fittings immediately to keep moisture out of the system.

3. REMOVE RECEIVER FROM RECEIVER HOLDER

INSTALLATION OF RECEIVER

1. INSTALL RECEIVER IN RECEIVER HOLDER

NOTE: Do not remove blind plugs until ready for connection.

2. CONNECT TWO LIQUID LINE TUBES TO RECEIVER

Torque: 135 kg-cm (10 ft-lb, 13 N·m)

3. IF RECEIVER IS REPLACED, ADD COMPRESSOR OIL TO COMPRESSOR

Add 10 – 20 cc (0.3 – 0.7 fl. oz.)

4. EVACUATE, CHARGE AND TEST REFRIGERATION SYSTEM
(See page AC-12)

COOLING UNIT

(See page AC-22)

ON-VEHICLE INSPECTION OF EXPANSION VALVE

1. CONNECT MANIFOLD GAUGE TO COMPRESSOR

2. CHECK EXPANSION VALVE OPERATION

(a) Run the engine at fast idle with the air conditioning on.

(b) Check that reading on the low pressure is between 0.5 – 5.0 kg/cm² (7 – 71 psi, 49 – 490 kPa).

If the reading is too low, check and replace the expansion valve and/or receiver.

If the reading is too high, tighten the remote valve holders and/or replace the expansion valve.

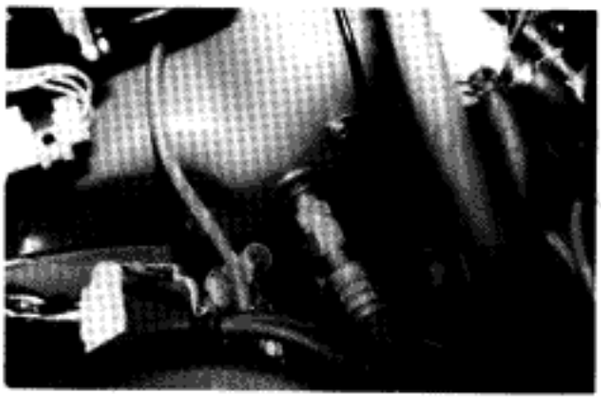

REMOVAL OF COOLING UNIT

1. DISCONNECT NEGATIVE CABLE FROM BATTERY
2. DISCHARGE REFRIGERATION SYSTEM
   (See page AC-12)
3. DISCONNECT SUCTION FLEXIBLE HOSE FROM COOLING UNIT OUTLET FITTING
4. DISCONNECT LIQUID LINE TUBE FROM COOLING UNIT INLET FITTING

   NOTE: Cap the open fittings immediately to keep moisture out of the system.

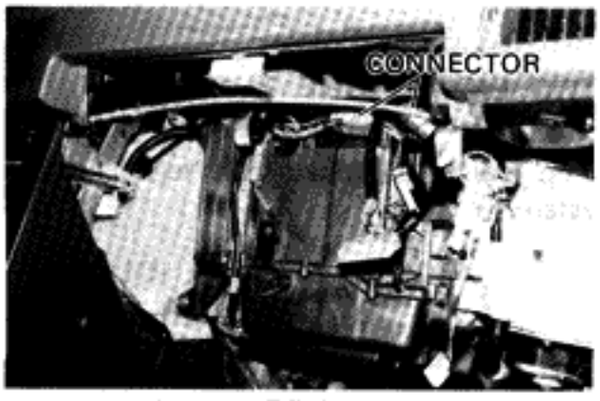

5. REMOVE GROMMETS FROM INLET AND OUTLET FITTINGS
6. REMOVE FOLLOWING COMPONENTS:
   (a) Glove box with undercover
   (b) Side air duct
7. DISCONNECT CONNECTORS

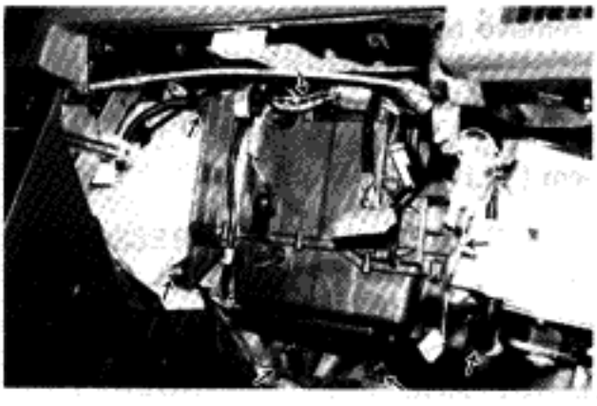

8. REMOVE COOLING UNIT

   Remove the three nuts and four bolts.
9. REMOVE A/C AMPLIFIER
10. REMOVE A/C WIRE HARNESS FROM COOLING UNIT

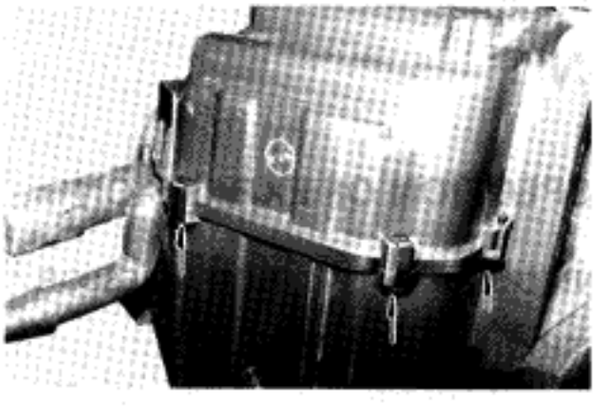

DISASSEMBLY OF COOLING UNIT

1. REMOVE LOWER CASE

   Using a screwdriver, remove the four clamps, and four screws.
2. REMOVE UPPER CASE FROM EVAPORATOR

   Remove the two screws.

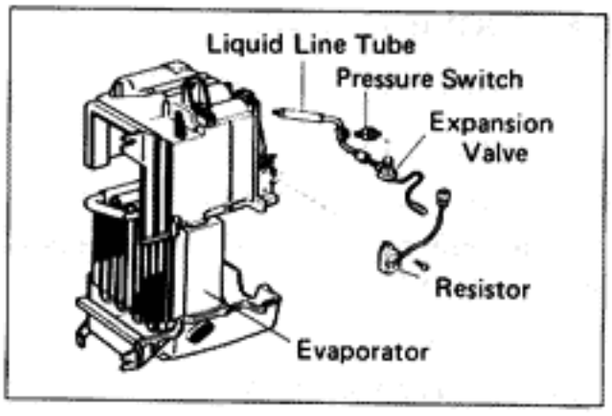

3. REMOVE COMPONENTS FROM EVAPORATOR

(a) Remove the heat insulator and the clamp from the outlet tube.

(b) Disconnect the liquid line tube from inlet fitting of the expansion valve.

(c) Disconnect the expansion valve from the inlet fitting of the evaporator.

(d) Remove the pressure switch, if required.

Evaporator

INSPECTION OF EVAPORATOR

1. CHECK EVAPORATOR FINS FOR BLOCKAGE

If the fins are clogged, clean them with compressed air.

CAUTION: Never use water to clean the evaporator.

2. CHECK FITTINGS FOR CRACKS OR SCRATCHES

Repair as necessary.

ASSEMBLY OF COOLING UNIT

1. INSTALL COMPONENTS ON EVAPORATOR

(a) Connect the expansion valve to the inlet fitting of the evaporator. Torque the nut.

Torque: 235 kg-cm (17 ft-lb, 23 N·m)

NOTE: Be sure that the O-ring is positioned on the tube fitting.



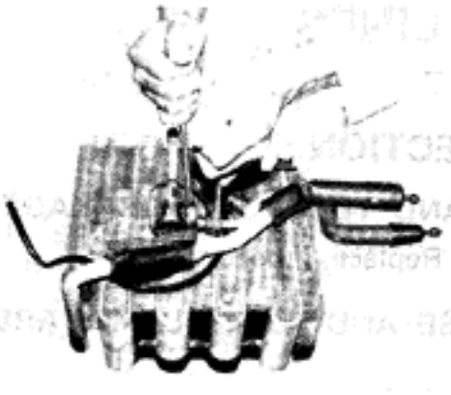

(b) Connect the liquid line tube to the inlet fitting of the expansion valve. Torque the nut.

Torque: 135 kg-cm (10 ft-lb, 13 N·m)

(c) Install the pressure switch, if removed.

Torque: 135 kg-cm (10 ft-lb, 13 N·m)

(d) Install the clamp and heat insulator to the outlet tube.

2. INSTALL UPPER AND LOWER CASES ON EVAPORATOR

3. INSTALL THERMISTOR



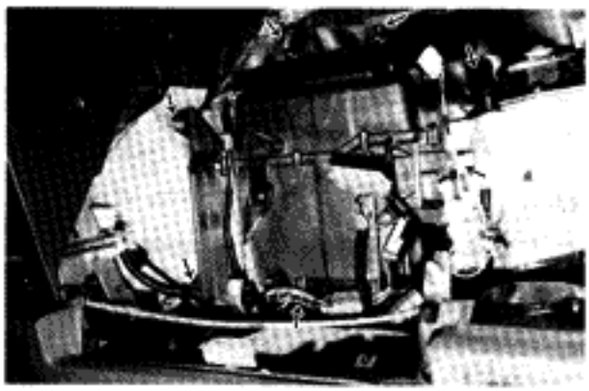

INSTALLATION OF COOLING UNIT

1. INSTALL A/C WIRE HARNESS TO COOLING UNIT

2. INSTALL COOLING UNIT

   Install the cooling unit with the three nuts and four bolts.

   CAUTION: Be careful not to pinch the wiring harness while installing the cooling unit.

3. INSTALL FOLLOWING COMPONENTS:

   (a) Side air duct

   (b) Glove box with undercover

4. INSTALL GROMMETS ON INLET AND OUTLET FITTINGS

5. CONNECT LIQUID LINE TUBE TO COOLING UNIT INLET FITTING

   Torque: 135 kg-cm (10 ft-lb, 13 N·m)

6. CONNECT SUCTION FLEXIBLE HOSE TO COOLING UNIT OUTLET FITTING

   Torque: 325 kg-cm (24 ft-lb, 32 N·m)

7. IF EVAPORATOR IS REPLACED, ADD COMPRESSOR OIL TO COMPRESSOR

   Add 20 – 35 cc (0.7 – 1.2 fl. oz.)

8. CONNECT NEGATIVE CABLE TO BATTERY

9. EVACUATE, CHARGE AND TEST REFRIGERATION SYSTEM (See page AC-12)

REFRIGERANT LINES

(See page AC-22)

ON-VEHICLE INSPECTION

1. INSPECT HOSES AND TUBES FOR LEAKAGE

   Use a gas leak tester. Replace, if necessary.

2. CHECK THAT HOSE AND TUBE CLAMPS ARE NOT LOOSE

   Tighten or replace, as necessary.

REPLACEMENT OF REFRIGERANT LINES

1. DISCHARGE REFRIGERATION SYSTEM
(See page AC-12)

2. REPLACE FAULTY TUBE OR HOSE

NOTE: Cap the open fittings immediately to keep moisture out of the system.

Tightening torques for the O-ring fittings.

Fitting size	Torque
0.31 in. tube for liquid line	135 kg-cm (10 ft-lb, 13 N·m)
0.50 in. tube for discharge line	225 kg-cm (16 ft-lb, 22 N·m)
0.61 in. tube for suction line	325 kg-cm (24 ft-lb, 32 N·m)

3. EVACUATE, CHARGE AND TEST REFRIGERATION SYSTEM (See page AC-12)

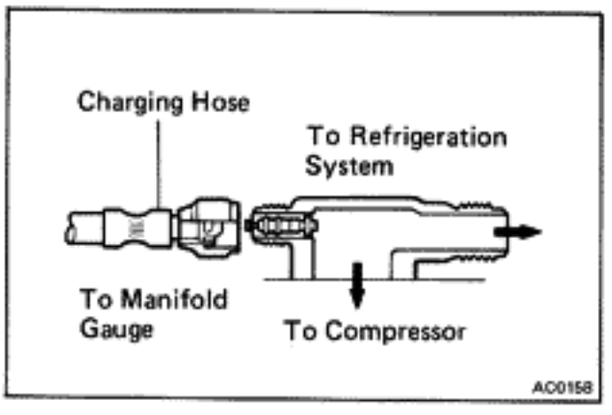

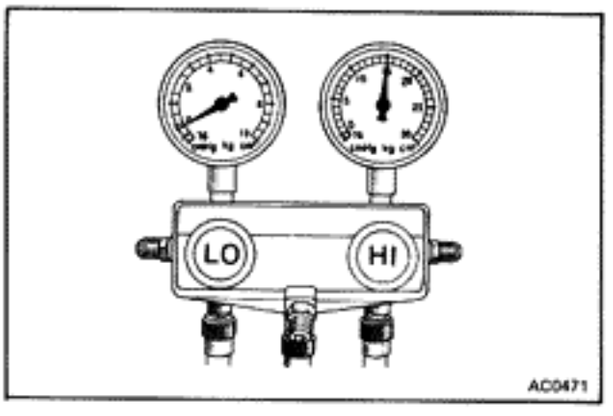

EXPANSION VALVE

ON-VEHICLE INSPECTION

1. CHECK QUANTITY OF GAS DURING REFRIGERATION CYCLE

2. INSTALL MANIFOLD GAUGE SET
   (a) Close the high pressure and low pressure valves.
   (b) Connect the high pressure hose to the discharge service valve of the compressor.
   (c) Connect the low pressure hose to the suction service valve of the compressor.

3. RUN ENGINE

Run the engine at 2,000 rpm for at least 5 minutes.
Then check that the high pressure reading is 13 – 15 kg/cm² (185 – 213 psi, 1,275 – 1,471 kPa).

4. CHECK EXPANSION VALVE

If the expansion valve is faulty, the low pressure reading will drop to 0 kg/cm². (0 psi, 0 kPa), otherwise it is OK.

NOTE: When the low pressure drops to 0 kg/cm² (0 psi, 0 kPa), feel the receiver's IN and OUT sides for no temperature difference.

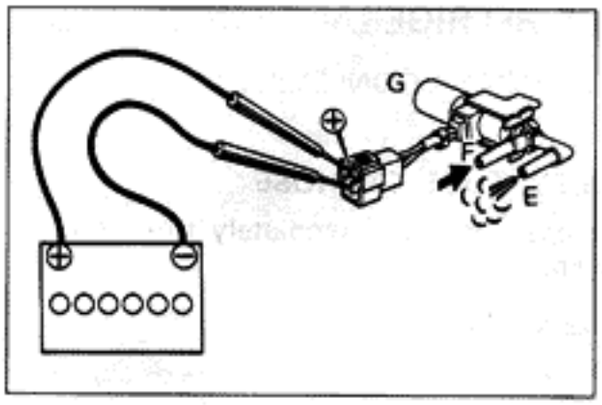

VACUUM SWITCHING VALVE (VSV)

(See page AC-22)

INSPECTION OF VSV

1. **CHECK VACUUM CIRCUIT CONTINUITY IN VSV BY BLOWING AIR INTO PIPES**

   (a) Connect the VSV terminals to the battery terminals as illustrated.

   (b) Blow into pipe "F" and check that air comes out of pipe "E".

   (c) Disconnect the battery.

   (d) Blow into pipe "F" and check that air comes out of the filter "G".

   If a problem is found, repair or replace the VSV.

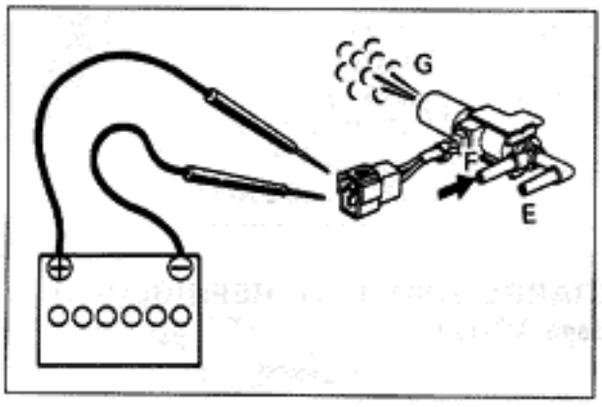

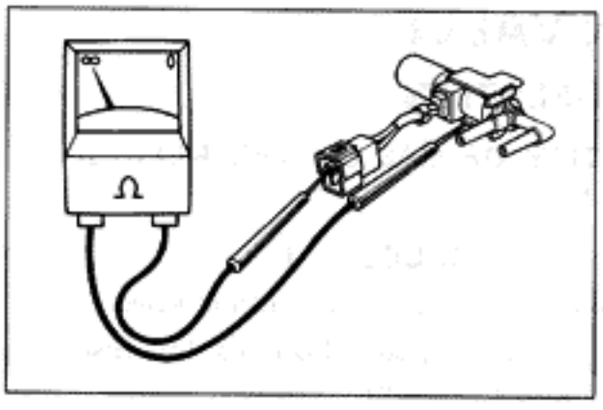

2. **CHECK FOR SHORT CIRCUIT**

   Using an ohmmeter, check that there is no continuity between each terminal and the VSV body.

   If there is continuity, replace the VSV.

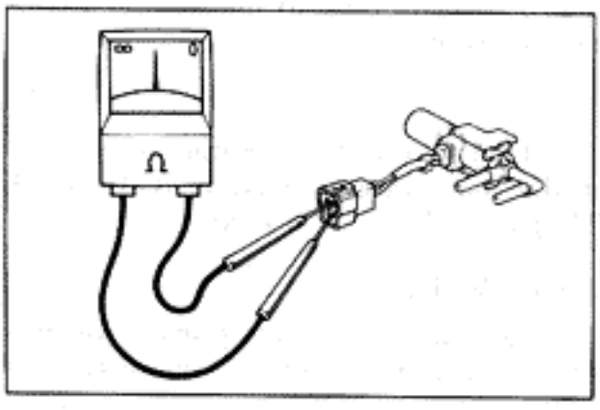

3. **CHECK FOR OPEN CIRCUIT**

   Using an ohmmeter, measure the resistance between the two terminals.

   Resistance: 38 – 43 Ω (cold)

   If resistance is not within specification, replace the VSV.

SERVICE SPECIFICATIONS

	Page
MAINTENANCE	A-2
ENGINE MECHANICAL	A-3
EFI SYSTEM	A-7
COOLING SYSTEM	A-10
LUBRICATION SYSTEM	A-10
IGNITION SYSTEM	A-10
STARTING SYSTEM	A-11
CHARGING SYSTEM	A-11
CLUTCH	A-12
MANUAL TRANSMISSION	A-13
AUTOMATIC TRANSMISSION	A-16
PROPELLER SHAFT	A-19
FRONT AXLE AND SUSPENSION	A-20
REAR AXLE AND SUSPENSION	A-21
BRAKE SYSTEM	A-24
STEERING	A-26
BODY	A-28
LUBRICANT	A-29

MAINTENANCE

Engine

Drive belt tension					
w/Borroughs drive belt tension gauge No. BT-33-73F or Nippondenso BTG-20 (95506-00020)					
Alternator	New belt		170 ± 10 lb		
	Used belt		135 ± 20 lb		
PS pump and A/C compressor	New belt		125 ± 25 lb		
	Used belt		80 ± 20 lb		
Coolant capacity		M/T	8.0 liters	8.5 US qts	7.0 Imp. qts
		A/T	7.9 liters	8.3 US qts	7.0 Imp. qts
Engine oil capacity	Drain and refill				
	w/Oil filter change		5.1 liters	5.4 US qts	4.5 Imp. qts
	w/o Oil filter change		4.6 liters	4.9 US qts	4.1 Imp. qts
Spark plug					
Type		ND	P16R		
		NGK	BPR5EP11		
Gap			1.1 mm	0.043 in.	
Firing order			1–5–3–6–2–4		

Chassis

Front and rear brake					
Pad thickness	Limit		1 mm	0.04 in.	
Disc thickness	Limit	Front	21 mm	0.83 in.	
		Rear	17 mm	0.67 in.	
Disc runout	Limit		0.15 mm	0.0059 in.	
Parking brake					
Lining thickness	Limit		1 mm	0.04 in.	
Drum inner diameter	Limit		168 mm	6.61 in.	
Front axle and suspension					
Ball joint vertical play	Limit		2.5 mm	0.098 in.	
Wheel bearing friction preload					
In addition rotation friction force of the oil seal			0 – 1,050 g	0 – 2.3 lb	0 – 10 N
Steering wheel freeplay			Max. 30 mm	1.18 in.	
Chassis and body tightening torque:					
Front seat mounting bolt			375 kg-cm	27 ft-lb	37 N·m
Front suspension member x Body			1,300 kg-cm	94 ft-lb	127 N·m
Strut bar bracket x Body			440 kg-cm	32 ft-lb	43 N·m
Rear suspension member x Body (Front & Rear)			1,320 kg-cm	95 ft-lb	129 N·m

ENGINE MECHANICAL

Specifications

Idle speed			650 rpm		
Intake manifold vacuum			More than 430 mmHg (16.93 in.Hg, 57.3 kPa)		
Compression pressure	at 250 rpm	STD	11.5 kg/cm^2	164 psi	1,128 kPa
		Limit	9.0 kg/cm^2	128 psi	883 kPa
Differential of pressure between each cylinder			Less than 1.0 kg/cm^2 (14 psi, 98 kPa)		
Cylinder head	Head surface warpage		Limit	0.10 mm	0.0039 in.
	Camshaft housing surface warpage		Limit	0.10 mm	0.0039 in.
	Exhaust manifold surface warpage		Limit	0.10 mm	0.0039 in.
	Intake manifold surface warpage		Limit	0.10 mm	0.0039 in.
	Valve seat	Refacing angle	Intake	30°, 45°, 60°	
			Exhaust	30°, 45°, 67.5°	
		Contacting angle		45°	
		Contacting width		1.2 – 1.6 mm	0.047 – 0.063 in.
Valve guide bushing	Inner diameter			8.01 – 8.03 mm	0.3154 – 0.3161 in.
	Outer diameter	STD		13.040 – 13.051 mm	0.5134 – 0.5138 in.
		O/S type 0.05		13.090 – 13.101 mm	0.5154 – 0.5158 in.
	Replacing temperature (cylinder head side)			Approx. 90°C (194°F)	
Valve	Valve overall length	STD	Intake	107.5 mm	4.232 in.
			Exhaust	109.7 mm	4.319 in.
	Valve face angle		IN & EX	44.5°	
	Stem diameter		Intake	7.970 – 7.985 mm	0.3138 – 0.3144 in.
			Exhaust	7.965 – 7.980 mm	0.3136 – 0.3142 in.
	Stem oil clearance	STD	Intake	0.025 – 0.060 mm	0.0010 – 0.0024 in.
			Exhaust	0.030 – 0.065 mm	0.0012 – 0.0026 in.
		Limit	Intake	0.08 mm	0.0031 in.
			Exhaust	0.10 mm	0.0039 in.
	Stem end refacing	Limit	IN & EX	0.5 mm	0.020 in.
	Valve head edge thickness	Limit	Intake	0.5 mm	0.020 in.
			Exhaust	1.0 mm	0.039 in.
Valve spring	Free length		Intake	49.1 mm	1.933 in.
			Exhaust	52.5 mm	2.067 in.
	Installed length		Intake	40.0 mm	1.575 in.
			Exhaust	43.0 mm	1.693 in.
	Installed load		Intake	34.7 – 38.3 kg	76.5 – 84.4 lb 340 – 376 N
			Exhaust	33.3 – 36.7 kg	73.4 – 80.9 lb 327 – 360 N
	Squareness			2.0 mm	0.079 in.
Lash adjuster	Leak down test at 20 kg (44.1 lb)			2 – 7 seconds/1 mm (0.04 in.)	

Specifications (Cont'd)

Camshaft	Thrust clearance		STD	0.05 – 0.25 mm	0.0020 – 0.0098 in.
			Limit	0.30 mm	0.0118 in.
	Journal oil clearance		STD	0.025 – 0.066 mm	0.0010 – 0.0026 in.
			Limit	0.1 mm	0.004 in.
	Journal diameter		No. 1	37.959 – 37.975 mm	1.4944 – 1.4951 in.
			No. 2	42.959 – 42.975 mm	1.6913 – 1.6919 in.
			No. 3	43.459 – 43.475 mm	1.7110 – 1.7116 in.
			No. 4	43.959 – 43.975 mm	1.7307 – 1.7313 in.
			No. 5	44.459 – 44.475 mm	1.7504 – 1.7510 in.
			No. 6	44.959 – 44.975 mm	1.7700 – 1.7707 in.
			No. 7	45.459 – 45.475 mm	1.7897 – 1.7904 in.
	Circle runout	Limit	IN & EX	0.04 mm	0.0016 in.
	Cam height	STD	Intake	35.660 – 35.670 mm	1.4039 – 1.4043 in.
			Exhaust	35.662 – 35.672 mm	1.4040 – 1.4044 in.
		Limit	Intake	35.465 mm	1.3963 in.
			Exhaust	35.467 mm	1.3963 in.
Camshaft housing	Cylinder head surface warpage		Limit	0.10 mm	0.0039 in.
Intake and exhaust manifold	Manifold surface warpage				
		Limit	Intake	0.1 mm	0.004 in.
			Exhaust	0.75 mm	0.0295 in.
Air intake chamber	Intake manifold surface warpage		Limit	0.1 mm	0.004 in.
Idler pulley tension spring	Free length			69 mm	2.72 in.
Pump drive shaft	Thrust clearance		STD	0.06 – 0.13 mm	0.0024 – 0.0051 in.
			Limit	0.3 mm	0.012 in.
	Oil clearance		STD	0.025 – 0.066 mm	0.0010 – 0.0026 in.
			Limit	0.08 mm	0.0031 in.
	Journal diameter		Front	40.959 – 40.975 mm	1.6126 – 1.6132 in.
			Rear	32.959 – 32.975 mm	1.2976 – 1.2982 in.
Cylinder block	Warpage		Limit	0.05 mm	0.0020 in.
	Cylinder bore		STD	82.99 – 83.04 mm	3.2673 – 3.2693 in.
	Cylinder bore wear				
	On standard sized piston		Limit	83.25 mm	3.2776 in.
	On oversized piston	(O/S 0.50)	Limit	83.75 mm	3.2972 in.
		(O/S 0.75)	Limit	84.00 mm	3.3071 in.
		(O/S 1.00)	Limit	84.25 mm	3.3169 in.
	Difference of bore limit between cylinder			Less than 0.05 mm (0.0020 in.)	
	Taper and our-of-round		Limit	0.02 mm	0.0008 in.

Specifications (Cont'd)

Piston and piston ring	Piston diameter		STD	82.93 – 82.98 mm	3.2650 – 3.2669 in.
		O/S type 0.50		83.43 – 83.48 mm	3.2846 – 3.2866 in.
		O/S type 0.75		83.68 – 83.73 mm	3.2945 – 3.2965 in.
		O/S type 1.00		83.93 – 83.98 mm	3.3043 – 3.3063 in.
	Piston to cylinder clearance			0.06 – 0.08 mm	0.0024 – 0.0031 in.
	Piston ring end gap	No. 1	STD	0.29 – 0.47 mm	0.0114 – 0.0185 in.
			Limit	0.71 mm	0.0280 in.
		No. 2	STD	0.25 – 0.55 mm	0.0098 – 0.0217 in.
			Limit	1.15 mm	0.0453 in.
		Oil	STD	0.17 – 0.85 mm	0.0067 – 0.0335 in.
			Limit	1.45 mm	0.0571 in.
	Ring groove clearance	No. 1		0.03 – 0.07 mm	0.0012 – 0.0028 in.
		No. 2		0.02 – 0.06 mm	0.0008 – 0.0024 in.
	Piston pin installing temperature			60°C	140°F
Connecting rod and bearing	Thrust clearance		STD	0.160 – 0.296 mm	0.0063 – 0.0117 in.
			Limit	0.3 mm	0.012 in.
	Bearing oil clearance		STD	0.021 – 0.053 mm	0.0008 – 0.0021 in.
			Limit	0.08 mm	0.0031 in.
	Pin to bushing oil clearance		STD	0.005 – 0.011 mm	0.0002 – 0.0004 in.
			Limit	0.015 mm	0.0006 in.
	Piston pin diameter			21.997 – 22.009 mm	0.8660 – 0.8665 in.
	Rod bend	Limit	per 100 mm (3.94 in.)	0.05 mm	0.0020 in.
	Rod twist	Limit	per 100 mm (3.94 in.)	0.15 mm	0.0059 in.
Crankshaft	Thrust clearance		STD	0.05 – 0.25 mm	0.0020 – 0.0098 in.
			Limit	0.3 mm	0.012 in.
	Thrust washer thickness		STD	2.925 – 2.975 mm	0.1152 – 0.1171 in.
		O/S type 0.125		2.988 – 3.038 mm	0.1176 – 0.1196 in.
		O/S type 0.250		3.050 – 3.100 mm	0.1201 – 0.1220 in.
	Main journal oil clearance		STD	0.034 – 0.058 mm	0.0013 – 0.0023 in.
			Limit	0.08 mm	0.0031 in.
	Main journal diameter		STD	59.988 – 60.012 mm	2.3617 – 2.3627 in.
	Main journal finished diameter		U/S 0.25	59.730 – 59.740 mm	2.3516 – 2.3520 in.
			U/S 0.50	59.480 – 59.490 mm	2.3417 – 2.3421 in.
		Bearing U/S type		0.25, 0.50	
	Crank pin diameter		STD	51.976 – 52.000 mm	2.0463 – 2.0472 in.
	Crank pin finished diameter		U/S 0.25	51.725 – 51.735 mm	2.0364 – 2.0368 in.
			U/S 0.50	51.475 – 51.485 mm	2.0266 – 2.0270 in.
		Bearing U/S type		0.25, 0.50	
	Circle runout		Limit	0.06 mm	0.0024 in.
	Main journal taper and out-of-round		Limit	0.02 mm	0.0008 in.
	Check pin journal taper and out-of-round		Limit	0.02 mm	0.0008 in.
Flywheel	Runout		Limit	0.1 mm	0.004 in.

Torque Specifications

Part tightened		kg-cm	ft-lb	N-m
Cylinder head x Cylinder block		800	58	78
Manifold x Cylinder head	Intake	180	13	18
	Exhaust	400	29	39
Camshaft housing x Cylinder head		220	16	22
Camshaft pulley x Camshaft		700	51	69
No. 2 timing belt cover x Cylinder head		130	9	13
Pump drive shaft x Cylinder block		130	9	13
Timing belt case x Cylinder block	8 mm bolt & Nut	185	13	18
	10 mm bolt	375	27	37
Pump drive shaft pulley x Drive shaft		220	16	22
Idler pulley x Timing belt case x Cylinder block		500	36	49
Distributor x Camshaft housing		140	10	14
Crankshaft bearing cap x Cylinder block		1,040	75	102
Connecting rod cap x Connecting rod		450	33	44
Crankshaft pulley x Crankshaft		2,200	159	216
Flywheel x Crankshaft		750	54	74
Oil pump x Cylinder block		220	16	22
Oil pump outlet pipe nut		350	25	34
Oil pump union bolt		350	25	34
Oil pan x Cylinder block		80	69 in.-lb	7.8

EFI SYSTEM

Specifications

Pressure regulator	Fuel pressure	w/No vacuum	2.3 – 2.7 kg/cm² 33 – 38 psi 226 – 265 kPa
Cold start injector	Resistance Leakage		3 – 5 Ω Less than one drop of fuel per minute
Injector	Resistance Injection volume Difference between each injector Leakage		1.5 – 3.0 Ω 40 – 50 cc/15 sec (2.4 – 3.1 cu in.) Less than 6 cc (0.37 cc in.) Less than one drop of fuel per minute
Air flow meter	Resistance	E_2 – Vs	20 – 400 Ω (Measuring plate fully closed) 20 – 1,000 Ω (Measuring plate fully open)
		E_2 – Vc	200 – 400 Ω
		E_1 – Fc	∞ (Measuring plate closed) 0 (Measuring plate open)
		E_2 – THA	10 – 20 kΩ (–20°C, –4°F) 4 – 7 kΩ (0°C, 32°F) 2 – 3 kΩ (20°C, 68°F) 0.9 – 1.3 kΩ (40°C, 104°F) 0.4 – 0.7 kΩ (60°C, 140°F)
ISC valve	Resistance	B_1 – S_1 or S_3	10 – 30 Ω
		B_2 – S_2 or S_4	10 – 30 Ω
Throttle body	Throttle valve fully closed angle		6°

Throttle position sensor	Clearance between stop screw and lever	Between terminals	Resistance (kΩ)
	0 mm or 0 in.	VTA – E_2	0.2 – 0.8
	0.50 mm 0.0197 in.	IDL – E_2	0 – 100
	0.90 mm 0.0354 in.		Infinity
	Throttle valve fully open	VTA – E_2	3.3 – 10
	–	Vc – E_2	3 – 7

Main relay	Resistance		No. 1 Main relay	No. 2 Main relay
		1 – 2	40 – 60 Ω	60 – 120 Ω
		3 – 4	∞	∞
Circuit opening relay	Resistance	STA – E_1	17 – 25 Ω	
		+B – Fc	88 – 112 Ω	
		+B – Fp	∞	
Resistor	Resistance	No. 10 or No. 20 – +B	2 Ω	
Start injector	Resistance	STJ – STA	24 – 40 Ω (Below 30°C, 86°F) 40 – 60Ω (Above 40°C, 104°F)	
		STA – Ground	20 – 80 Ω	
Water temp. sensor	Resistance		10 – 20 Ω (–20°C, –4°F) 4 – 7 kΩ (0°C, 32°F) 2 – 3 kΩ (20°C, 68°F) 0.9 – 1.3 kΩ (40°C, 104°F) 0.4 – 0.7 kΩ (60°C, 140°F) 0.2 – 0.4 kΩ (80°C, 176°F)	

Specifications (Cont'd)

NOTE: 1. Perform all voltage and resistance measurements with the computer connected.
2. Verify that the battery voltage is 11 V or above when the ignition switch is ON.

Terminals	STD voltage	Condition	
BAT–E_1	10–14	–	
+B–E_1		Ignition S/W ON	–
IG S/W–E_1			
M-REL–E_1			
IDL–E_2	4–6		Throttle valve open
VTA–E_2	4–5		Throttle valve fully opened
	0.1–1.0		Throttle valve fully closed
Vc–E_2	4–6		–
Vs–E_2	4–5		Measuring plate fully closed
	0.02–0.08		Measuring plate fully open
	2–4	Idling	
	0.3–1.0	3,000 rpm	
THA–E_2	1–2	IG S/W ON	Intake air temperature 20°C (68°F)
THW–E_2	0.1–0.5		Coolant temperature 80°C(176°F)
STA–E_1	6–12	Ignition switch ST position	
No. 10 / No. 20 –E_1	9–14	Ignition switch ON	
IGt–E_1	0.7–1.0	Cranking or idling	
ISC_1 – ISC_4 –E_1	9–14	Ignition switch ON	
	9–14	After engine off 2–3 secs.	
+B–EGR	10–13	Ignition switch ON	
	0	Engine start and warm up Oxygen sensor	
N/C–E_1	0	Ignition S/W ON	Shift position P or N range (for A/T)
	10–14		Except P or N range (for A/T)
	0		Clutch pedal not depressed (for M/T)
	10–14		Clutch pedal depressed (for M/T)
	9–11	Cranking	
T–E_1	4–6	Ignition S/W ON	Check connector T_1 and E_1 not short
	0		Check connector T_1 and E_1 short
OIL–E_1	4–6	Ignition switch ON (Warning light lights up)	
	0	Engine start (Warning light goes out)	
A/C–E_1	10–13	Ignition S/W ON	A/C switch ON
	0		A/C switch OFF
V_F–E_1	0↔5	Engine start (Throttle valve open)	
W–E_1	0	Ignition switch ON	
	10–13	Engine start	
TCD–E_1	2–3	Ignition S/W ON	Coolant temperature Less than 35°C (95°F)
	0		Coolant temperature 35–60°C (95–140°F)
	4–6		Coolant temperature More than 70°C (158°F)

Specifications (Cont'd)

Terminals	Resistance (Ω)	Condition
IDL – E_2	∞	Throttle valve open
	0 – 100	Throttle valve fully closed
VTA – E_2	3,300 – 10,000	Throttle valve fully opened
	200 – 800	Throttle valve fully closed
Vc – E_2	3,000 – 7,000	Disconnect air flow meter connector
	200 – 400	Disconnect throttle position sensor connector
Vs – E_2	20 – 400	Measuring plate fully closed
	20 – 1,000	Measuring plate fully open
THA – E_2	2,000 – 3,000	Intake air temperature 20°C (68°F)
G – G⊖	140 – 180	–
Ne – G⊖		–
ISC_1, ISC_2 ISC_3, ISC_4 – +B	10 – 30	–

Torque Specifications

Part tightened	kg-cm	ft-lb	N·m
Fuel tank and line			
Fuel tank band x Fuel tank bracket	220	16	22

COOLING SYSTEM

Radiator	Relief valve opening pressure	STD	0.75 – 1.05 kg/cm²	10.7 – 14.9 psi	74 – 103 kPa
		Limit	0.6 kg/cm²	8.5 psi	59 kPa
Thermostat	Valve opening temperature				
	Start to open at		86 – 90°C	187 – 194°F	
	Fully opens at		100°C	212°F	
	Valve opening travel at 100°C (212°F)		8 mm	0.31 in.	

LUBRICATION SYSTEM

Oil pressure	at Idle speed		More than 0.3 kg/cm² (4.3 psi, 29 kPa)		
	at 3,000 rpm		2.5 – 5.0 kg/cm²	36 – 71 psi	245 – 490 kPa
Oil pump	Body clearance	STD	0.03 – 0.06 mm	0.0012 – 0.0024 in.	
		Limit	0.2 mm	0.008 in.	
	Side clearance	STD	0.03 – 0.09 mm	0.0012 – 0.0035 in.	
		Limit	0.15 mm	0.0059 in.	
	Gear backlash	STD	0.5 – 0.6 mm	0.020 – 0.024 in.	
		Limit	0.9 mm	0.035 in.	
	Drive shaft diameter	STD	14.00 – 14.01 mm	0.5512 – 0.5516 in.	
		Limit	13.9 mm	0.547 in.	
	Relief valve operating pressure		4.4 – 5.0 kg/cm²	63 – 71 psi	431 – 490 kPa

IGNITION SYSTEM

Ignition timing	T/M in N range		10° BTDC @ (Check connector T and E_1 short)	
Spark plug	Type	ND	P16R	
		NGK	BPR 5E P11	
	Gap	Limit	1.4 mm	0.055 in.
High-tension cord	Resistance	Limit	Less than 25 kΩ per cord	
Ignition coil	Primary coil resistance		0.4 – 0.5 Ω	
	Secondary coil resistance		8.5 – 11.5 kΩ	
Distributor	Pickup coil resistance	G – G ⊖	140 – 180 Ω	
		Ne – G ⊖		

STARTING SYSTEM

Starter	Rated voltage and output power			12 V, 1.4 kW	
	No-load characteristic		Ampere	Less than 90 A	
			rpm	More than 3,500 rpm at 11.5 V	
	Brush	Length	STD	15.5 mm	0.610 in.
			Limit	10 mm	0.39 in.
	Commutator	Outer diameter	STD	30 mm	1.18 in.
			Limit	29 mm	1.14 in.
		Undercut depth	STD	0.6 mm	0.024 in.
			Limit	0.2 mm	0.008 in.
		Circle runout	Limit	0.05 mm	0.0020 in.
	Spring installed load		STD	1,785 – 2,415 g	3.9 – 5.3 lb 18 – 24 N

CHARGING SYSTEM

Battery specific gravity when fully charged at 20°C (68°F)				1.25 – 1.27
Drive belt tension w/Borroughs drive belt tension gauge No. BT-33-73F			New belt	170 ± 10 lb
			Used belt	135 ± 20 lb
Alternator	Rated output			12 V 60 A
	Rotor coil resistance			Less than 3 Ω
	Brush exposed length		STD	10.5 mm 0.413 in.
			Limit	4.5 mm 0.177 in.
Alternator regulator (IC)	Regulating voltage			13.5 – 15.1 V (25°C or 77°F)

CLUTCH

Specifications

Pedal height (from asphalt sheet)			154 – 164 mm	6.06 – 6.46 in.
Push rod play at pedal top			1 – 5 mm	0.04 – 0.20 in.
Pedal freeplay			5 – 15 mm	0.20 – 0.59 in.
Release fork end play			Non adjustable type	
Disc rivet head depth		Limit	0.3 mm	0.012 in.
Disc runout		Limit	0.8 mm	0.031 in.
Diaphragm spring out of alignment		Limit	0.5 mm	0.020 in.
Diaphragm spring finger wear	Depth	Limit	0.6 mm	0.024 in.
	Width	Limit	5.0 mm	0.197 in.
Flywheel runout		Limit	0.2 mm	0.008 in.

Torque Specifications

Part tightened	kg-cm	ft-lb	N·m
Clutch cover x Flywheel	185	13	18
Release fork support x Clutch housing	400	29	39
Pressure plate x Clutch cover	250	18	25
Master cylinder set bolt	250	18	25
Reservoir set bolt	250	18	25
Clutch tube union nut	155	11	15
Flexible hose	235	17	23
Clutch pedal setting nut	425	31	42

MANUAL TRANSMISSION

Specifications

Manual transmission (W58)	Output shaft			
	2nd gear journal diameter	Limit	42.85 mm	1.6870 in.
	3rd gear journal diameter	Limit	37.80 mm	1.4882 in.
	Flange thickness	Limit	5.60 mm	0.2205 in.
	Runout	Limit	0.06 mm	0.0024 in.
	1st gear inner race flange thickness	Limit	4.70 mm	0.1850 in.
	1st gear inner race outer diameter	Limit	42.85 mm	1.6870 in.
	Counter gear			
	Center bearing journal outer diameter			
		Limit	29.90 mm	1.1772 in.
	5th gear journal outer diameter	Limit	26.85 mm	1.0571 in.
	Gear thrust clearance			
	1st, 2nd & 3rd	STD	0.10 – 0.25 mm	0.0039 – 0.0098 in.
		Limit	0.30 mm	0.0118 in.
	Counter 5th	STD	0.10 – 0.41 mm	0.0039 – 0.0161 in.
		Limit	0.46 mm	0.0181 in.
	Gear oil clearance 1st & 2nd	STD	0.009 – 0.060 mm	0.0004 – 0.0024 in.
		Limit	0.15 mm	0.0059 in.
	3rd	STD	0.060 – 0.103 mm	0.0024 – 0.0041 in.
		Limit	0.20 mm	0.0079 in.
	Counter 5th	STD	0.009 – 0.062 mm	0.0004 – 0.0024 in.
		Limit	0.15 mm	0.0059 in.
	Shift fork to hub sleeve clearance	Limit	1.0 mm	0.039 in.
	Synchronizer ring to gear clearance	STD	0.7 – 1.7 mm	0.028 – 0.067 in.
		Limit	0.5 mm	0.020 in.
	Input shaft snap ring thickness			
	Mark			
	1		2.05 – 2.10 mm	0.0807 – 0.0827 in.
	2		2.10 – 2.15 mm	0.0827 – 0.0846 in.
	3		2.15 – 2.20 mm	0.0846 – 0.0866 in.
	4		2.20 – 2.25 mm	0.0866 – 0.0886 in.
	5		2.25 – 2.30 mm	0.0886 – 0.0906 in.
	11		2.30 – 2.35 mm	0.0906 – 0.0925 in.
	12		2.35 – 2.40 mm	0.0925 – 0.0945 in.

Specifications (Cont'd)

Manual transmission (W58)	Output shaft snap ring thickness			
	Front	Mark		
		D	1.80 – 1.85 mm	0.0709 – 0.0728 in.
		11	1.86 – 1.91 mm	0.0732 – 0.0752 in.
		12	1.92 – 1.97 mm	0.0756 – 0.0776 in.
		13	1.98 – 2.03 mm	0.0780 – 0.0799 in.
		14	2.04 – 2.09 mm	0.0803 – 0.0823 in.
		15	2.10 – 2.15 mm	0.0827 – 0.0846 in.
	Rear	Mark		
		8	2.31 – 2.36 mm	0.0909 – 0.0929 in.
		9	2.37 – 2.42 mm	0.0933 – 0.0953 in.
		10	2.43 – 2.48 mm	0.0957 – 0.0976 in.
		11	2.49 – 2.54 mm	0.0980 – 0.1000 in.
		12	2.55 – 2.60 mm	0.1004 – 0.1024 in.
		13	2.61 – 2.66 mm	0.1028 – 0.1047 in.
		14	2.68 – 2.73 mm	0.1055 – 0.1075 in.
		15	2.74 – 2.79 mm	0.1079 – 0.1098 in.
	Reverse gear	Mark		
		5	2.25 – 2.30 mm	0.0886 – 0.0906 in.
		11	2.30 – 2.35 mm	0.0906 – 0.0925 in.
		12	2.35 – 2.40 mm	0.0925 – 0.0945 in.
		13	2.40 – 2.45 mm	0.0945 – 0.0965 in.
		14	2.45 – 2.50 mm	0.0965 – 0.0984 in.
		15	2.50 – 2.55 mm	0.0984 – 0.1004 in.
		16	2.55 – 2.60 mm	0.1004 – 0.1024 in.
		17	2.61 – 2.66 mm	0.1028 – 0.1047 in.
		18	2.67 – 2.72 mm	0.1051 – 0.1071 in.
		19	2.73 – 2.78 mm	0.1075 – 0.1094 in.
		20	2.79 – 2.84 mm	0.1098 – 0.1118 in.
		21	2.85 – 2.90 mm	0.1122 – 0.1142 in.
		22	2.91 – 2.96 mm	0.1146 – 0.1165 in.
		23	2.97 – 3.02 mm	0.1169 – 0.1189 in.

Specifications (Cont'd)

Manual transmission (W58)	Countershaft snap ring thickness			
	Front	Mark		
		1	2.05 – 2.10 mm	0.0807 – 0.0827 in.
		2	2.10 – 2.15 mm	0.0827 – 0.0846 in.
		3	2.15 – 2.20 mm	0.0846 – 0.0866 in.
		4	2.20 – 2.25 mm	0.0866 – 0.0886 in.
		5	2.25 – 2.30 mm	0.0886 – 0.0906 in.
		6	2.30 – 2.35 mm	0.0906 – 0.0925 in.
		7	2.35 – 2.40 mm	0.0925 – 0.0945 in.
	Rear	Mark		
		1	1.90 – 1.95 mm	0.0748 – 0.0768 in.
		2	1.96 – 2.01 mm	0.0772 – 0.0791 in.
		3	2.02 – 2.07 mm	0.0795 – 0.0815 in.
		4	2.08 – 2.13 mm	0.0819 – 0.0839 in.
		5	2.14 – 2.19 mm	0.0843 – 0.0862 in.
		6	2.20 – 2.25 mm	0.0866 – 0.0886 in.
		7	2.26 – 2.31 mm	0.0890 – 0.0909 in.
	No. 3 clutch hub	Mark		
		2	2.06 – 2.11 mm	0.0811 – 0.0831 in.
		3	2.12 – 2.17 mm	0.0835 – 0.0854 in.
		4	2.18 – 2.23 mm	0.0858 – 0.0878 in.
		5	2.24 – 2.29 mm	0.0882 – 0.0902 in.

Torque Specifications

	Part tightened	kg-cm	ft-lb	N·m
Manual transmission (W58)	Shift fork set bolt	125	9	12
	Straight screw plug	250	18	25
	Idler shaft stopper bolt	250	18	25
	Reverse restrict pin	250	18	25
	Front bearing retainer set bolt	250	18	25
	Extension housing x Intermediate plate	375	27	37
	Restrict pin	410	30	40
	Shift lever housing x Shift and select lever	400	29	39
	Shift lever retainer x Extension housing	185	13	18
	Drain and filler plugs	410	30	40
	Back-up light switch	410	30	40
	Clutch housing x Transmission case	375	27	37

AUTOMATIC TRANSMISSION
Specifications

Line pressure (wheel locked)					
Engine idling		D range	3.7 – 4.1 kg/cm²	53 – 58 psi	363 – 402 kPa
		R range	5.1 – 5.7 kg/cm²	73 – 81 psi	500 – 559 kPa
at stall		D range	10.6 – 13.0 kg/cm²	151 – 185 psi	1,040 – 1,275 kPa
(Throttle valve fully opened)		R range	14.3 – 19.0 kg/cm²	203 – 270 psi	1,402 – 1,863 kPa
Engine stall revolution			2,100 ± 150 rpm		
Time lag	N range →	D range	Less than 1.2 seconds		
	N range →	R range	Less than 1.5 seconds		
Engine idling speed (A/C OFF)		N range	650 rpm		
Throttle cable adjustment					
Throttle valve fully opened			Between boot end face and inner cable stopper		
			0 – 1 mm	0 – 0.04 in.	
Torque converter installing					
Drive plate runout		Limit	0.20 mm	0.0079 in.	

Shift point schedule km/h (mph)

		Throttle valve fully open [ ] Fully closed km/h (mph)							
		1–2	2–3	3–OD	[3–OD]	[OD–3]	OD–3	3–2	2–1
D range	NORM	47–52 (29–32)	92–101 (57–63)	135–144 (84–89)	[36–40 (22–25)]	[26–30 (16–19)]	130–138 (81–86)	88–96 (55–60)	42–47 (26–29)
	PWR	52–57 (32–35)	105–114 (65–71)	152–161 (94–100)	[42–46 (26–29)]	[28–32 (17–20)]	146–155 (91–96)	101–109 (63–68)	42–47 (26–29)
2 range	NORM PWR	47–52 (29–32)	112–121 (70–75)	–	–	–	–	102–110 (63–68)	42–47 (26–29)
L range	NORM PWR	–	–	–	–	–	–	–	51–55 (32–34)

Lock-up point schedule km/h (mph)

		Throttle valve opening 5% km/h (mph)					
		Lock-up ON			Lock-up OFF		
		2nd	3rd(•)	OD	2nd	3rd(•)	OD
D range	NORM PWR	–	53–58 (33–36)	53–58 (33–36)	–	49–54 (30–34)	49–54 (30–34)
2 range	NORM PWR	–	–	–	–	–	–
L range	NORM PWR	–	–	–	–	–	–

(•) OD Switch OFF

Specifications (Cont'd)

		Free length	Coil outer diameter	No. Coils	Wire diameter	Color
Valve body spring mm (in.)	Lower valve body					
	Lock-up relay valve	32.60 (1.2835)	11.30 (0.4449)	8.5	1.00 (0.0394)	Green
	Pressure relief valve	32.14 (1.2654)	13.14 (0.5173)	9	2.03 (0.0799)	None
	Primary regulator valve	56.30 (2.2165)	17.20 (0.6772)	13	1.80 (0.0709)	Blue
	Low coast modulator valve	42.35 (1.6673)	10.00 (0.3937)	15	0.84 (0.0331)	None
	Intermediate modulator valve	35.43 (1.3949)	10.00 (0.3937)	14	0.89 (0.0350)	Red
	Oil cooler by-pass valve	33.32 (1.3118)	13.82 (0.5441)	7	1.32 (0.0520)	Yellow
	Upper rear valve body					
	1-2 shift valve	29.15 (1.1476)	8.90 (0.3504)	10.0	0.90 (0.0354)	Blue
	2-3 shift valve	29.15 (1.1476)	8.90 (0.3504)	10.0	0.90 (0.0354)	Blue
	3-4 shift valve	29.15 (1.1476)	8.90 (0.3504)	10.0	0.90 (0.0354)	Blue
	Reverse clutch sequence valve	37.55 (1.4783)	10.00 (0.3937)	14.5	1.17 (0.0461)	None
	Upper front valve body					
	Throttle valve	19.24 (0.7575)	8.58 (0.3378)	8	0.71 (0.0280)	None
	Down shift plug	39.55 (1.5571)	10.90 (0.4291)	9.4	1.20 (0.0472)	Green
	Secondary regulator valve	71.27 (2.8059)	17.43 (0.6862)	15	1.93 (0.0760)	Green
	Cut-back valve	23.00 (0.9055)	6.85 (0.2697)	10.5	0.65 (0.0256)	Green

Clutch piston return spring (C_0, C_1, C_2)	Free length		15.1 mm	0.594 in.
	Coil outer diameter		8.0 mm	0.315 in.
	No. of coils		5.5	
Clutch and brake piston return spring (B_0, B_1, B_2, B_3)	Free length		16.12 mm	0.6346 in.
	Coil outer diameter		8.0 mm	0.315 in.
	No. of coil		6	
Oil pump	Side clearance	STD	0.02 – 0.05 mm	0.0008 – 0.0020 in.
		Limit	0.1 mm	0.004 in.
	Body clearance	STD	0.07 – 0.15 mm	0.0028 – 0.0059 in.
		Limit	0.3 mm	0.012 in.
	Tip clearance Driven gear	STD	0.11 – 0.14 mm	0.0043 – 0.0055 in.
		Limit	0.3 mm	0.012 in.
Clutch piston stroke	Front clutch (C_1)		1.40 – 2.24 mm	0.0551 – 0.0882 in.
	Rear clutch (C_2)		0.90 – 1.75 mm	0.0354 – 0.0689 in.
	OD direct clutch (C_0)		1.77 – 2.58 mm	0.0697 – 0.1016 in.
Brake piston stroke	No. 1 brake (B_1)		0.80 – 1.73 mm	0.0315 – 0.0681 in.
	No. 2 brake (B_2)		1.01 – 2.25 mm	0.0398 – 0.0886 in.
Brake piston clearance	No. 3 brake (B_3)		0.61 – 2.64 mm	0.0240 – 0.1039 in.
	OD brake (B_0)		0.40 – 1.38 mm	0.0157 – 0.0543 in.

Specifications (Cont'd)

				Free length	Coil outer diameter	No. coils	Wire diameter	Color
Accumulator piston spring mm (in.)	B_2	Front	Upper	50.68 (1.9953)	20.00 (0.7874)	7.09	2.80 (0.1102)	Light Gray
			Lower	35.13 (1.3831)	16.16 (0.6362)	6	1.30 (0.0512)	Red
	C_2	Center	Upper	43.56 (1.7150)	14.30 (0.5630)	9.45	1.80 (0.0709)	Blue
			Lower	32.73 (1.2886)	14.80 (0.5827)	8.23	1.30 (0.0512)	Green
	C_1	Rear		64.68 (2.5465)	17.50 (0.6890)	22.5	2.00 (0.0787)	None

	Bushing name		Length	Finished bore	Bore limit
Bushing mm (in.)	Stator support	Front	17.45 (0.6870)	21.501 – 21.527 (0.8465 – 0.8475)	21.577 (0.8495)
		Rear	17.45 (0.6870)	23.025 – 23.051 (0.9065 – 0.9075)	23.101 (0.9095)
	Oil pump body		13.46 (0.5299)	38.113 – 38.138 (1.5005 – 1.5015)	38.188 (1.5035)
	OD sun gear	Front & Rear	9.70 (0.3819)	23.062 – 23.088 (0.9080 – 0.9090)	23.138 (0.9109)
	OD input shaft		9.00 (0.3543)	11.200 – 11.221 (0.4409 – 0.4418)	11.271 (0.4437)
	Sun gear	Front & Rear	13.50 (0.5315)	21.501 – 21.527 (0.8465 – 0.8475)	21.577 (0.8495)
	Center support		65.68 (2.5858)	36.386 – 36.411 (1.4325 – 1.4335)	36.461 (1.4355)
	Transmission case		13.46 (0.5299)	38.113 – 38.138 (1.5005 – 1.5015)	38.188 (1.5035)
	Output shaft		9.70 (0.3819)	18.001 – 18.026 (0.7087 – 0.7097)	18.076 (0.7117)
	Extension housing		29.75 (1.1713)	38.010 – 38.035 (1.4965 – 1.4974)	38.085 (1.4994)

Output shaft	Thrust play	0.3 – 0.9 mm	0.012 – 0.035 in.
Oil pump input shaft	Thrust play	0.3 – 0.9 mm	0.012 – 0.035 in.
Drive plate	Runout Limit	Less than 0.20 mm (0.0079 in.)	
Torque converter	Runout Limit	Less than 0.30 mm (0.0118 in.)	

Torque Specifications

Part tightened		kg-cm	ft-lb	N-m
Engine x Transmission		650	47	64
Transmission housing	12 mm	580	42	57
	10 mm	345	25	34
Extension housing		345	25	34
Engine rear support member		425	31	42
Drive plate		650	47	64
Torque converter		280	20	27
Oil pump		215	16	21
Center support		260	19	25
Upper valve body x Lower valve body		55	48 in.-lb	5.4
Valve body		100	7	10
Oil strainer		55	48 in.-lb	5.4
Oil pan		45	39 in.-lb	4.4
Oil pump cover bolt		75	65 in.-lb	7.4
Cooler pipe union nut		350	25	34
Testing plug		75	65 in.-lb	7.4
Parking lock pawl bracket		75	65 in.-lb	7.4

PROPELLER SHAFT

Specifications

Shaft runout	Limit	0.8 mm	0.031 in.
Spider axial play		0 mm	0 in.

Torque Specifications

Part tightened		kg-cm	ft-lb	N-m
Intermediate shaft x Center bearing x Joint flange				
	1st	1,850	134	181
	2nd	Loosen nut		
	3rd	700	51	69
Center bearing flange x Universal joint flange yoke		430	31	42
Universal joint flange yoke x Companion flange		430	31	42
Center bearing bracket x Body		410	30	40

FRONT AXLE AND SUSPENSION

Specifications

Cold tire inflation pressure	1.9 kg/cm²	27 psi	186 kPa

NOTE: For continuous high-speed driving in excess of 120 km/h (75 mph), inflate the tires to 0.3 kg/cm² (4.3 psi, 29 kPa) higher than the recommended cold tire inflation pressure.

		Inspection STD	Adjustment STD
Front wheel alignment			
Toe-in		3 ± 2 mm (0.12 ± 0.08 in.)	3 ± 1 mm (0.12 ± 0.04 in.)
Camber		50′ ± 45′	–
	Left-right error	30′	
Steering axis inclination		10°10′ ± 45′	–
	Left-right error	30′	
Caster		4°10′ ± 45′	4°10′ ± 30′
	Left-right error	30′	30′
Side slip		Less than 3.0 mm/m (0.118 in./3.3 ft)	
Wheel angle	Inside wheel	37°35′ ± 2°	
	Outside wheel	30°45′ (Reference)	

Disc wheel lateral runout	Max. limit	1.0 mm		0.039 in.
Wheel bearing preload (turning load at hub in addition to rotation friction force of the oil seal)		0 – 1,050 g	0 – 2.3 lb	0 – 10 N
Hub axial play	Max. limit	0.05 mm		0.0020 in.
Ball joint vertical play	Max. limit	2.5 mm		0.098 in.

Torque Specifications

Part tightened	kg-cm	ft-lb	N·m
Shock absorber piston rod x Suspension support	475	34	47
Shock absorber shell x Ring nut	1,250	90	123
Lower arm x Suspension member	1,100	80	108
Lower ball joint x Steering knuckle arm	800	58	78
Strut bar x Strut bar bracket	1,050	76	103
Steering knuckle arm x Tie rod	600	43	59
Strut bar x Lower arm	670	48	66
Strut bar bracket x Body	475	34	47
Stabilizer bar x Lower arm	180	13	18
Stabilizer bar bracket x Strut bar bracket	130	9	13
Suspension support x Fender apron	375	27	37
Shock absorber x Knuckle arm	1,000	72	98
Suspension member x Body	1,100	80	108
Wheel nut x Front wheel hub	1,050	76	103
Disc brake assembly x Shock absorber	930	67	91

REAR AXLE AND SUSPENSION
Specifications

Rear axle shaft	Oil seal drive in depth	Inner	31 mm	1.22 in.
		Outer	6 mm	0.24 in.
	Flange runout	Max. limit	0.1 mm	0.004 in.
	Rear axle shaft bearing preload		Add oil seal rotation resistance	
		at Starting	1 – 4 kg-cm	
			(0.9 – 3.5 in.-lb, 0.1 – 0.4 N·m)	
Rear drive shaft (IRS type)	Inboard joint pack in grease			
		Race	60 g	0.13 lb
		Boot	60 g	0.13 lb
	Outboard joint pack in grease			
		Race	60 g	0.13 lb
		Boot	60 g	0.13 lb
	Installed length (between flange and flange)		416.5 – 419.5 mm	16.398 – 16.516 in.
Differential	Drive pinion bearing preload at Starting			
		New bearing	12 – 19 kg-cm	
			(10.4 – 16.5 in.-lb, 1.2 – 1.9 N·m)	
		Reused bearing	6 – 10 kg-cm	
			(5.2 – 8.7 in.-lb, 0.6 – 1.0 N·m)	
	Total preload	at Starting	Add drive pinion bearing preload	
			4 – 6 kg-cm	
			(3.5 – 5.2 in.-lb, 0.4 – 0.6 N·m)	
	Drive pinion to ring gear backlash		0.13 – 0.18 mm	0.0051 – 0.0071 in.
	Pinion gear to side gear backlash		0.05 – 0.20 mm	0.0020 – 0.0079 in.
	Ring gear runout	Limit	0.07 mm	0.0028 in.
	Companion flange runout			
	Limit	Radial	0.10 mm	0.0039 in.
		Lateral	0.10 mm	0.0039 in.
	Ring gear installing temperature		90 – 110°C	194 – 230°F
	Drive pinion oil seal drive in depth		1.5 mm	0.06 in.
	Side gear oil seal drive in depth		Flash the carrier end surface	
	Side gear shaft runout	Max. limit	0.2 mm	0.008 in.
	Drive pinion adjusting plate washer thickness		2.23 – 2.25 mm	0.0878 – 0.0886 in.
			2.26 – 2.28 mm	0.0890 – 0.0898 in.
			2.29 – 2.31 mm	0.0902 – 0.0909 in.
			2.32 – 2.34 mm	0.0913 – 0.0921 in.
			2.35 – 2.37 mm	0.0925 – 0.0933 in.
			2.38 – 2.40 mm	0.0937 – 0.0945 in.
			2.41 – 2.43 mm	0.0949 – 0.0957 in.
			2.44 – 2.46 mm	0.0961 – 0.0969 in.
			2.47 – 2.49 mm	0.0972 – 0.0980 in.
			2.50 – 2.52 mm	0.0984 – 0.0992 in.
			2.53 – 2.55 mm	0.0996 – 0.1004 in.
			2.56 – 2.58 mm	0.1008 – 0.1016 in.
			2.59 – 2.61 mm	0.1020 – 0.1028 in.
			2.62 – 2.64 mm	0.1031 – 0.1039 in.
			2.65 – 2.67 mm	0.1043 – 0.1051 in.
			2.68 – 2.70 mm	0.1055 – 0.1063 in.
			2.71 – 2.73 mm	0.1067 – 0.1075 in.

Specifications (Cont'd)

Differential (Cont'd)	Side gear thrust washer thickness	0.96 – 1.04 mm	0.0378 – 0.0409 in.
		1.06 – 1.14 mm	0.0417 – 0.0449 in.
		1.16 – 1.24 mm	0.0457 – 0.0488 in.
		1.26 – 1.34 mm	0.0496 – 0.0528 in.
	Side bearing adjusting plate thickness	2.57 – 2.59 mm	0.1012 – 0.1020 in.
		2.60 – 2.62 mm	0.1024 – 0.1031 in.
		2.63 – 2.65 mm	0.1035 – 0.1043 in.
		2.66 – 2.68 mm	0.1047 – 0.1055 in.
		2.69 – 2.71 mm	0.1059 – 0.1067 in.
		2.72 – 2.74 mm	0.1071 – 0.1079 in.
		2.75 – 2.77 mm	0.1083 – 0.1091 in.
		2.78 – 2.80 mm	0.1094 – 0.1102 in.
		2.81 – 2.83 mm	0.1106 – 0.1114 in.
		2.84 – 2.86 mm	0.1118 – 0.1126 in.
		2.87 – 2.89 mm	0.1130 – 0.1138 in.
		2.90 – 2.92 mm	0.1142 – 0.1150 in.
		2.93 – 2.95 mm	0.1154 – 0.1161 in.
		2.96 – 2.98 mm	0.1165 – 0.1173 in.
		2.99 – 3.01 mm	0.1177 – 0.1185 in.
		3.02 – 3.04 mm	0.1189 – 0.1197 in.
		3.05 – 3.07 mm	0.1201 – 0.1209 in.
		3.08 – 3.10 mm	0.1213 – 0.1220 in.
		3.11 – 3.13 mm	0.1224 – 0.1232 in.
		3.14 – 3.16 mm	0.1236 – 0.1244 in.
		3.17 – 3.19 mm	0.1248 – 0.1256 in.
		3.20 – 3.22 mm	0.1260 – 0.1268 in.
		3.23 – 3.25 mm	0.1272 – 0.1280 in.

Cold tire inflation pressure	Tire size	Inflation pressure kg/cm² (psi, kPa)	
		Front	Rear
	225/60 HR 14	1.9 (27, 186)	1.9 (27, 186)

Rear wheel alignment	Inspection STD	Adjustment STD
Toe-in	0 ± 2 mm (0 ± 0.08 in.)	0 ± 1 mm (0 ± 0.04 in.)
Camber	−10′ ± 45′	−10′ ± 30′
Left-right error	20′	20′

Torque Specifications

	Part tightened		kg-cm	ft-lb	N·m
Rear axle shaft	Rear axle shaft x Flange (retighten the nut 5 – 10° at a time until the specified preload is reached.)	1st	800	58	78
		Max.	2,000	145	196
Drive shaft	Drive shaft x Rear axle shaft		700	51	69
	Drive shaft x Differential		700	51	69
Differential	Propeller shaft x Companion flange		430	31	42
	Carrier cover		220	16	22
	Drive shaft x Side gear shaft		700	51	69
	Companion flange x Drive pinion (retighten the nut 130 kg-cm (9 ft-lb, 13 N·m) at a time until the specified preload is reached.)	1st	1,100	80	108
		Max.	2,400	174	235
	Ring gear x Differential case		985	71	97
	Side bearing cap		800	58	78
	Differential carrier x Support		850	61	83
	Carrier support x Member		850	61	83
Suspension	Shock absorber x Body		250	18	25
	Shock absorber x Suspension arm		375	27	37
	Stabilizer link x Suspension arm		180	13	18
	Stabilizer bar end x Stabilizer link		310	22	30
	Stabilizer bar bracket x Member		185	13	18
	Suspension arm x Member	Inside	1,325	96	130
		Outside	1,175	85	115
	Differential support member x Body		1,200	87	118

BRAKE SYSTEM
Specifications

Brake	Pedal height (from asphalt sheet)		154 – 164 mm	6.06 – 6.46 in.
	Pedal freeplay		3 – 6 mm	0.12 – 0.24 in.
	Pedal reserve distance at 50 kg (110.2 lb, 490 N)		More than 75 mm (2.95 in.)	
Brake booster	Booster push rod to piston clearance			
		at Idling vacuum	0.1 – 0.5 mm	0.004 – 0.020 in.
		at No vacuum	0.60 – 0.65 mm	0.0236 – 0.0256 in.
		w/ SST	0 mm	0 in.
Front brake	Disc thickness	STD	20 mm	0.79 in.
		Limit	19 mm	0.75 in.
	Disc runout	Limit	0.15 mm	0.0059 in.
	Pad thickness	STD	10.5 mm	0.413 in.
		Limit	3.0 mm	0.118 in.
Rear brake	Disc thickness	STD	18 mm	0.71 in.
		Limit	17 mm	0.67 in.
	Disc runout	Limit	0.15 mm	0.0059 in.
	Pad thickness	STD	10.5 mm	0.413 in.
		Limit	3.0 mm	0.118 in.
Parking brake	Rear drum inner diameter	STD	167 mm	6.57 in.
		Limit	168 mm	6.61 in.
	Lining thickness	STD	2.0 mm	0.079 in.
		Limit	1.0 mm	0.039 in.
	Lever travel	at 20 kg (44.1 lb, 196 N)	5 – 8clicks	
	Clearance between rear shoe and lever		0 – 0.35 mm	0 – 0.0138 in.

Torque Specifications

Part tightened		kg-cm	ft-lb	N·m
Brake booster clevis lock nut		250	18	25
Brake booster x Pedal bracket		130	9	13
Master cylinder x Brake booster		130	9	13
Reservoir set bolt x Master cylinder		250	18	25
Outlet plug x Master cylinder		450	33	44
Piston stopper bolt x Master cylinder		100	7	10
P & B valve x Spring Support		90	78 in.-lb	8.8
Front disc brake caliper x Knuckle		925	67	91
Front disc brake dust cover x Knuckle		185	13	18
Front disc brake cylinder installation bolt		200	14	20
Flexible hose		235	17	23
Brake tube flare nut		155	11	15
Bleeder plug	Front	85	74 in.-lb	8.3
	Rear	85	74 in.-lb	8.3
Front disc x Front axle hub		650	47	64
Parking brake lever x Floor		130	9	13
Parking brake No. 1 cable lock nut		55	48 in.-lb	5.4
Parking brake cable clamp x Side member or cable retainer		55	48 in.-lb	5.4
Rear disc brake caliper x Rear suspension arm		475	34	47
Rear disc brake cylinder installation bolt		200	14	20
Rear suspension arm x Parking brake backing plate		185	13	18
Rear suspension arm x Parking brake backing plate anchor pin		1,450	105	142

STEERING
Specifications

Steering	Steering wheel freeplay	Limit	30 mm	1.18 in.
	Steering rack runout	Limit	0.3 mm	0.012 in.
Power steering	Maximum rise of oil level		5 mm	0.20 in.
	Oil pressure	at Idle speed	More than 65 kg/cm² (924 psi, 6,374 kPa)	
	Variation in vane pump discharge pressure (at 1,000 rpm and 3,000 rpm)		Less than 5 kg/cm² (71 psi, 490 kPa)	
	Drive belt tension	New belt	125 ± 25 lb	
		Used belt	80 ± 20 lb	
	Steering effort	at Steering wheel	Less than 4 kg (8.8 lb, 39N)	
	Vane plate	Length STD	15.00 mm	0.5906 in.
		Limit	14.97 mm	0.5894 in.
		Height STD	8.2 mm	0.323 in.
		Limit	7.8 mm	0.307 in.
		Thickness STD	1.8 mm	0.071 in.
		Limit	1.7 mm	0.067 in.
	Vane plate to vane plate groove clearance	Limit	0.06 mm	0.0024 in.
	Shaft to bushing clearance	STD	0.010 – 0.030 mm	0.0004 – 0.0012 in.
		Limit	0.07 mm	0.0028 in.
	Flow control valve spring length	STD	50.0 mm	1.969 in.
		Limit	47.0 mm	1.850 in.
	Pump rotating torque		Less than 2.8 kg-cm (2.4 in.-lb, 0.3 N·m)	
	Steering rack runout	Limit	0.3 mm	0.012 in.
	Control valve shaft preload	at Turning	4.5 – 6.5 kg-cm (3.9 – 5.6 in.-lb, 0.4 – 0.6 N·m)	
	Total preload	at Turning	9 – 12 kg-cm (7.8 – 10.4 in.-lb, 0.9 – 1.2 N·m)	
	Vane length	Rotor and cam ring mark		
		None	14.996 – 14.998 mm	0.5904 – 0.5905 in.
		1	14.994 – 14.996 mm	0.5903 – 0.5904 in.
		2	14.992 – 14.994 mm	0.5902 – 0.5903 in.
		3	14.990 – 14.992 mm	0.59016 – 0.59024 in.
		4	14.988 – 14.990 mm	0.5901 – 0.5902 in.
Tilt steering	Collar No. 1 outer diameter		17.989 – 17.996 mm	0.7082 – 0.7085 in.
			17.996 – 18.003 mm	0.7085 – 0.7088 in.
			18.003 – 18.010 mm	0.7088 – 0.7091 in.
			18.010 – 18.017 mm	0.7091 – 0.7093 in.
			18.017 – 18.024 mm	0.7093 – 0.7096 in.

Specifications (Cont'd)

Tilt steering (Cont'd)	Collar No. 2 outer diameter	17.982 – 18.000 mm	0.7080 – 0.7087 in.
		18.000 – 18.018 mm	0.7087 – 0.7094 in.
	Tilt steering support shim thickness	0.2 mm	0.008 in.
		0.5 mm	0.020 in.
		0.8 mm	0.031 in.
		1.4 mm	0.055 in.
		1.8 mm	0.071 in.

Torque Specifications

Steering main shaft	Part tightened	kg-cm	ft-lb	N·m
	Steering wheel x Steering main shaft	350	25	34
	Column tube x Column hole cover	130	9	13
	Column bracket x Instrument panel	250	18	25
	Intermediate shaft x Steering worm shaft	350	25	34
Power steering	Rack housing x Cylinder housing	185	13	18
	Cylinder end stopper nut x Cylinder housing	1,750	127	172
	Steering rack end x Steering rack	1,050	76	103
	Control valve housing x Rack housing	185	13	18
	Pinion bearing adjust screw lock nut x Rack housing	700	51	69
	Rack guide spring cap lock nut x Rack housing	700	51	69
	Return pressure right and left tube union	300	22	29
	Pressure line x Rack housing	390	28	38
	Rack housing bracket x Body	770	56	76
	Front housing x Rear housing	475	34	47
	Union x Rear housing	700	51	69
	PS pump x Bracket	375	27	37
	Pressure line	450	33	44
	Pump pulley x Rotor shaft	445	32	44
	Tie rod end x Steering rack end	175	13	17
	Knuckle arm x Tie rod	600	43	59
Tilt steering	Tilt steering pawl set bolt	185	13	18
	Tilt lever retainer	185	13	18
	Support x Column bracket	185	13	18
	Support stopper bolt	100	7	10
	Upper bracket x Tilt steering support	75	65 in.-lb	7.4
	Support reinforcement x Tilt steering support	75	65 in.-lb	7.4
	Column bracket x Column tube	185	13	18
	Main shaft x Intermediate shaft	250	18	25

BODY

Torque Specifications

Part tightened		kg-cm	ft-lb	N·m
Front seat				
Seat back x Seat adjuster		375	27	37
Seat back x Seat truck		130	9	13
Seat cushion x Seat adjuster		185	13	18
Seat cushion x Seat truck		185	13	18
Seat adjuster x Body		375	27	37
Rear seat				
Seat back center hinge x Body		80	69 in.-lb	7.8
Seat belt (Front)				
ELR x Body	Upper side	55	43 in.-lb	4.9
	Lower side	440	32	43
Belt shoulder anchor x Body		440	32	43
Outer belt lower anchor x Body		440	32	43
Inner belt anchor x Body	Front side	195	14	19
	Rear side	440	32	43
Seat belt (Rear)				
ALR x Body		440	32	43
Belt anchor x Body		440	32	43

LUBRICANT

Item	Capacity			Classification
	Liters	US qts	Imp. qts	
Engine oil Dry fill Drain and refill w/ Oil filter change w/o Oil filter change	 5.7 5.1 4.6	 6.0 5.4 4.9	 5.0 4.5 4.1	API grade SF or SF/CC, multigrade viscosity oil
Munual transmission oil W58	 2.4	 2.5	 2.1	API GL-4 or GL-5 SAE 75W-90 or 80W-90
Automatic transmission fluid Dry fill Drain and refill	 6.5 2.4	 6.9 2.5	 5.7 2.1	ATF DEXRON® II
Differential oil IRS type	1.2	1.3	1.1	API GL-5 hypoid gear oil w/LSD Use LSD oil only Above –18°C (0°F) SAE 90 Below –18°C (0°F) SAE 80W-90 or 80W
Power steering fluid Pump Total	 350 cc 800 cc		 21.4 cu in. 48.8 cu in.	ATF DEXRON® or DEXRON® II
Ball joint grease	–			Molybdenum disulphide lithium base, NLGI No. 1 or No. 2
Wheel bearing grease	–			Lithium base multipurpose, NLGI No. 2
Brake fluid	–			SAE J1703, DOT 3
Antifreeze	–			Anti-rust type ethylene-glycol base coolant

STANDARD BOLT TORQUE SPECIFICATIONS

Page

STANDARD BOLT TORQUE SPECIFICATIONS B-2

STANDARD BOLT TORQUE SPECIFICATIONS

HOW TO DETERMINE BOLT STRENGTH

	Mark	Class		Mark	Class
Hexagon head bolt	 Bolt head No. 4– 5– 6– 7–	4T 5T 6T 7T	Stud bolt	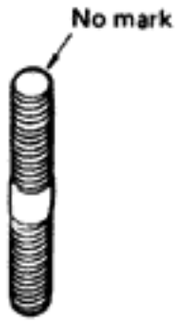	4T
	 No mark	4T			
Hexagon flange bolt w/washer hexagon bolt	 No mark	4T			6T
Hexagon head bolt	 Two protruding lines	5T			
Hexagon flange bolt w/washer hexagon bolt	 Two protruding lines	6T	Welded bolt	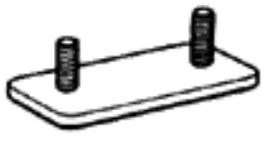	4T
Hexagon head bolt	 Three protruding lines	7T			

SPECIFIED TORQUE FOR STANDARD BOLTS

Class	Diameter mm	Pitch mm	Specified torque					
			Hexagon head bolt			Hexagon flange bolt		
			kg-cm	ft-lb	N·m	kg-cm	ft-lb	N·m
4T	6	1	55	48 in.-lb	5.4	60	52 in.-lb	5.9
	8	1.25	130	9	13	145	10	14
	10	1.25	260	19	25	290	21	28
	12	1.25	480	35	47	540	39	53
	14	1.5	760	55	75	850	61	83
	16	1.5	1,150	83	113		–	
5T	6	1	65	56 in.-lb	6.4		–	
	8	1.25	160	12	16		–	
	10	1.25	330	24	32		–	
	12	1.25	600	43	59		–	
	14	1.5	930	67	91		–	
	16	1.5	1,400	101	137		–	
6T	6	1	80	69 in.-lb	7.8	90	78 in.-lb	8.8
	8	1.25	195	14	19	215	16	21
	10	1.25	400	29	39	440	32	43
	12	1.25	730	53	72	810	59	79
	14	1.5		–		1,250	90	123
7T	6	1	110	8	11	120	9	12
	8	1.25	260	19	25	290	21	28
	10	1.25	530	38	52	590	43	58
	12	1.25	970	70	95	1,050	76	103
	14	1.5	1,500	108	147	1,700	123	167
	16	1.5	2,300	166	226		–	

SST AND SSM

	Page
SST (SPECIAL SERVICE TOOLS)	C-2
SSM (SPECIAL SERVICE MATERIALS)	C-12

SST (SPECIAL SERVICE TOOLS) (Cont'd)

Section / Classification / Part Name / Part No. / Illustration				EM	FI	LU	ST	CH	CL	MT	AT	PR	FA	RA	BR	SR	BE	BO
	(09215-00120)	(Gate "A")		●														
	(09215-00150)	(Shaft "A")		●														
	(09215-00160)	(Pin)		●														
	(09215-00210)	(Remover & Replacer)		●														
	(09215-00220)	(Remover & Replacer)		●														
	09222-30010	(Connecting Rod Bushing Remover & Replacer)	B	●														
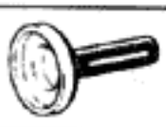	09223-41020	(Crankshaft Rear Oil Seal Replacer)	B	●														
	09228-44010	(Oil Filter Wrench)	A	●		●												
	09238-47012	(Water Pump Bearing Remover & Replacer)	B							●								
	09268-41045	(Injection Measuring Tool Set)	B		●													
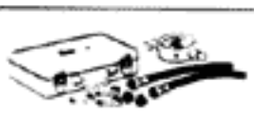	09268-45011	(EFI Fuel Pressure Gauge)	A		●													
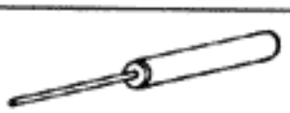	09276-70010	(Lash Adjuster Tool)	B	●														
	09278-54012	(Drive Shaft Holding Tool)	A	●														
	09285-76010	(Injection Pump Camshaft Bearing Cone Replacer)	C				●	●										

SST (SPECIAL SERVICE TOOLS) (Cont'd)

Section / Classification / Part Name / Part No. / Illustration				EM	FI	LU	ST	CH	CL	MT	AT	PR	FA	RA	BR	SR	BE	BO
	09286-46011	(Injection Pump Spline Shaft Puller)	C				●	●										
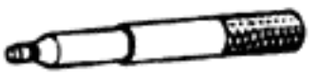	09301-20020	(Clutch Guide Tool)	A						●									
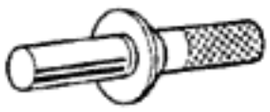	09302-30031	(Clutch Diaphragm Spring Height No. 3 Gauge)	B						●									
	09303-35011	(Input Shaft Front Bearing Puller)	A						●									
	09304-30012	(Input Shaft Front Bearing Replacer)	A						●									
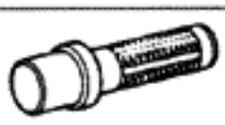	09307-30010	(Transmission Extension Housing Metal Replacer)	B							●								
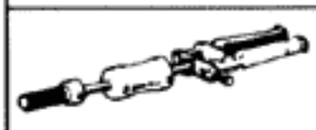	09308-00010	(Oil Seal Puller)	A							●				●				
	09308-10010	(Oil Seal Puller)	A	●						●	●			●				
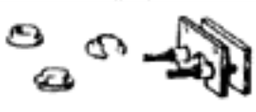	09312-20011	(Transmission Gear Remover & Replacer)	B							●								
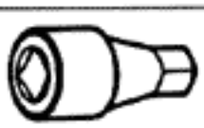	09313-30021	(Detent Ball Plug Socket)	A							●								
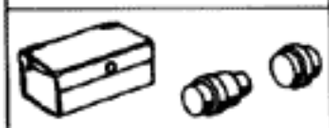	09315-00010	(Clutch Release Bearing Remover & Replacer)	A						●									
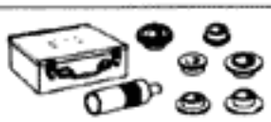	09316-60010	(Transmission & Transfer Bearing Replacer)	B							●				●				
	(09316-00010)	(Replacer Pipe)								●								
	(09316-00030)	(Replacer "B")												●				

SST (SPECIAL SERVICE TOOLS) (Cont'd)

Section / Classification / Part Name / Part No. / Illustration				EM	FI	LU	ST	CH	CL	MT	AT	PR	FA	RA	BR	SR	BE	BO
	(09316-00070)	(Replacer "F")								●								
	09325-20010	(Transmission Oil Plug)	A							●	●	●						
	09330-00021	(Companion Flange Holding Tool)	A	●								●		●				
	09333-00012	(Clutch Diaphragm Spring Aligner)	B						●									
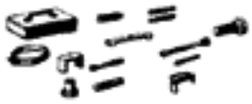	09350-20013	(TOYOTA Automatic Transmission Tool Set)	B								●							
	(09361-30011)	(Manual Valve Lever Shaft Oil Seal Replacer)									●							
	(09362-30011)	(Guide Bolt)									●							
	(09363-20010)	(Oil Pump Body Setting Band)									●							
	(09369-20040)	(Piston Spring Compressor Set)									●							
	(09370-12010)	(Clutch Drum Thrust Play Gauge)									●							
	(09388-20010)	(Oil Seal Replacer)									●							
	(09397-22020)	(One-way Clutch Test Tool Set)									●							
	09411-22011	(Side Gear Thrust Washer Adjust Tool)	B											●				
	09504-22010	(Differential Side Washer Remover & Replacer)	B											●				

SST (SPECIAL SERVICE TOOLS) (Cont'd)

Section / Classification / Part Name / Part No. / Illustration				EM	FI	LU	ST	CH	CL	MT	AT	PR	FA	RA	BR	SR	BE	BO
	09506-30011	(Differential Drive Pinion Rear Bearing Cone Replacer)	B											●				
	09506-35010	(Differential Drive Pinion Rear Bearing Replacer)	B	●						●								
	09520-00031	(Rear Axle Shaft Puller)	A											●				
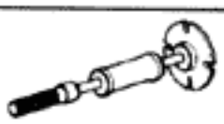	09520-22011	(Differential Side Gear Shaft Puller)	A											●				
	09550-10012	("B" Replacer Set)	B											●				
	(09252-10010)	(No. 1 Replacer Handle)												●				
	(09557-10010)	(Differential Drive Pinion Front Bearing Replacer)												●				
	(09558-10010)	(Rear Axle Shaft Oil Seal Replacer)												●				
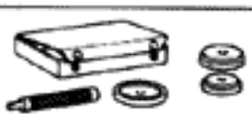	09550-22011	(Rear Axle Bearing & Differential Tool Set)	B											●				
	(09550-00020)	(Handle)												●				
	(09550-00031)	(Replacer)												●				
	(09550-00040)	(Replacer)												●				
	(09550-00050)	(Replacer)												●				
	09556-30010	(Drive Pinion Front Bearing Remover)	B											●				

SST (SPECIAL SERVICE TOOLS) (Cont'd)

Section / Classification / Part Name / Part No. / Illustration				EM	FI	LU	ST	CH	CL	MT	AT	PR	FA	RA	BR	SR	BE	BO
	09557-22022	(Companion Flange Remover & Replacer)	A											●				
	09608-20012	(Front Hub & Drive Pinion Bearing Tool Set)	B							●								
	(09608-00080)	(Replacer)								●								
	(09608-03020)	(Handle)								●								
	09608-30012	(Front Hub & Drive Pinion Bearing Tool Set)	B													●		
	(09608-04030)	(Front Hub Inner Bearing Cone Replacer)														●		
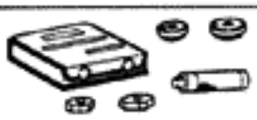	09608-30022	(Front Hub Bearing Replacer Set)	B										●					
	(09550-00050)	(Replacer)											●					
	(09608-05010)	(Handle)											●					
	(09608-05040)	(Replacer)											●					
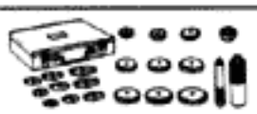	09608-35014	(Axle Hub & Drive Pinion Bearing Tool Set)	B							●				●				
	(09608-06020)	(Handle)								●				●				
	(09608-06090)	(Front Hub Outer & Steering Worm Bearing Replacer)								●								
	(09608-06100)	(Front Hub Outer Replacer)								●								

SST (SPECIAL SERVICE TOOLS) (Cont'd)

Section / Classification / Part Name / Part No. / Illustration				EM	FI	LU	ST	CH	CL	MT	AT	PR	FA	RA	BR	SR	BE	BO
	(09608-06110)	(Front Hub Inner & Drive Pinion Front Bearing Cup Replacer)												●				
	(09608-06120)	(Front Hub Outer Bearing Cup Replacer)												●				
	09610-20012	(Pitman Arm Puller)	A								●							
	09611-22012	(Tie Rod End Puller)	A	●									●					
	09612-24012	(Steering Gear Housing Overhaul Tool Set)	B													●		
	(09612-10021)	(Hexagon Wrench)														●		
	(09617-22030)	(Steering Rack End Wrench)														●		
	(09617-24010)	(Steering Rack Wrench)														●		
	(09617-24020)	(Steering Pinion Bearing Adjusting Screw Lock Nut Wrench)														●		
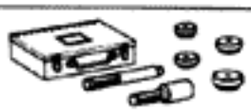	09620-30010	(Steering Gear Box Replacer Set)	B													●		
	(09623-30010)	(Steering Worm Bearing & Oil Seal Replacer)														●		
	(09624-30010)	(Steering Sector Shaft Oil Seal Replacer)														●		
	(09625-30010)	(Steering Main Shaft Bearing Replacer)														●		
	(09631-00020)	(Handle)														●		

SST (SPECIAL SERVICE TOOLS) (Cont'd)

Section / Classification / Part Name / Part No. / Illustration				EM	FI	LU	ST	CH	CL	MT	AT	PR	FA	RA	BR	SR	BE	BO
	09630-24013	(Steering Rack Oil Seal Tool Set)	B													●		
	(09620-24010)	(Valve Cap Oil Seal Remover)														●		
	(09631-24020)	(Piston Ring Guide)														●		
	(09631-24030)	(Piston Ring Tool)														●		
	(09631-24041)	(Ring)														●		
	(09631-24050)	(Ring Adapter)														●		
	(09631-24060)	(Cylinder End Stopper Nut Wrench)														●		
	(09631-24070)	(Oil Seal Replacer)														●		
	09710-22041	(Rear Suspension Bushing Tool Set)	B											●				
	09720-00011	(Shock Absorber Overhaul Tool Set)	B										●					
	(09721-00071)	(Front Shock Absorber Ring Nut Wrench)											●					
	(09721-00080)	(Front Shock Absorber Stand)											●					
	09726-10010	(Lower Suspension Arm Bushing Remove & Replacer)	B											●				
	09726-12022	(Lower Suspension Arm Bushing Remover & Replacer)	B										●					

SST (SPECIAL SERVICE TOOLS) (Cont'd)

Section / Classification / Part Name / Part No. / Illustration				EM	FI	LU	ST	CH	CL	MT	AT	PR	FA	RA	BR	SR	BE	BO
	(09726-01010)	(Remover)											●					
	(09726-01020)	(Replacer)											●					
	(09726-01030)	(Spacer)											●					
	(09726-01040)	(Seat)											●					
	09727-22032	(Front Coil Spring Compressor)	B										●					
	09729-22031	(Front Spring Upper Seat Holder)	B										●					
	09737-00010	(Brake Booster Push Rod Gauge)	A												●			
	09751-36011	(Brake Tube Union Nut 10 x 12 Wrench)	A						●				●		●			
	09806-30010	(Windshield Moulding Remover)	C															●
	09812-00010	(Door Hinge Set Bolt Wrench Set)	C															●
	09820-00021	(Alternator Bearing Puller)	B					●										
	09820-00030	(Alternator Rear Bearing Replacer)	B					●										
	09820-63010	(Alternator Pulley Set Nut Wrench Set)	B					●										
	09842-30020	(Wiring "C" EFI Inspection)	B		●													

SST (SPECIAL SERVICE TOOLS) (Cont'd)

Section / Classification / Part Name / Part No. / Illustration				EM	FI	LU	ST	CH	CL	MT	AT	PR	FA	RA	BR	SR	BE	BO
	09842-30050	(Wiring "A" EFI Inspection)	B		●													
	09921-00010	(Spring Tension Tool)	A							●	●							
	09950-00020	(Bearing Remover)	B							●				●				
	09950-00030	(Bearing Remover Attachment)	B											●				
	09950-20016	(Universal Puller)	A	●						●				●				
	09992-00093	(Oil Pressure Gauge Set)	A								●							

AUTOMATIC TRANSMISSION HYDRAULIC CIRCUIT

A43DE HYDRAULIC CIRCUIT

"R" RANGE CIRCUIT

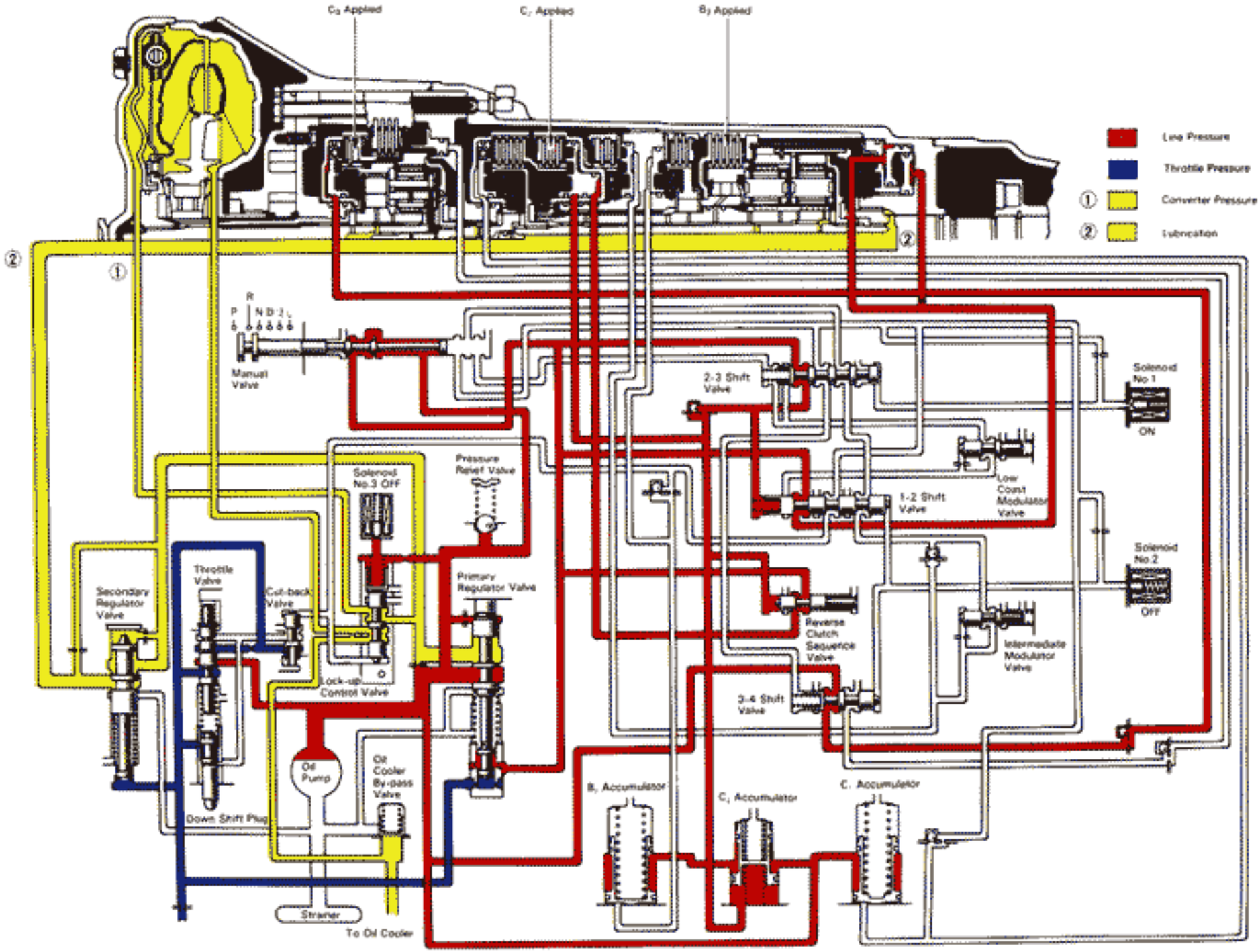

A43DE
"D" RANGE FIRST GEAR CIRCUIT

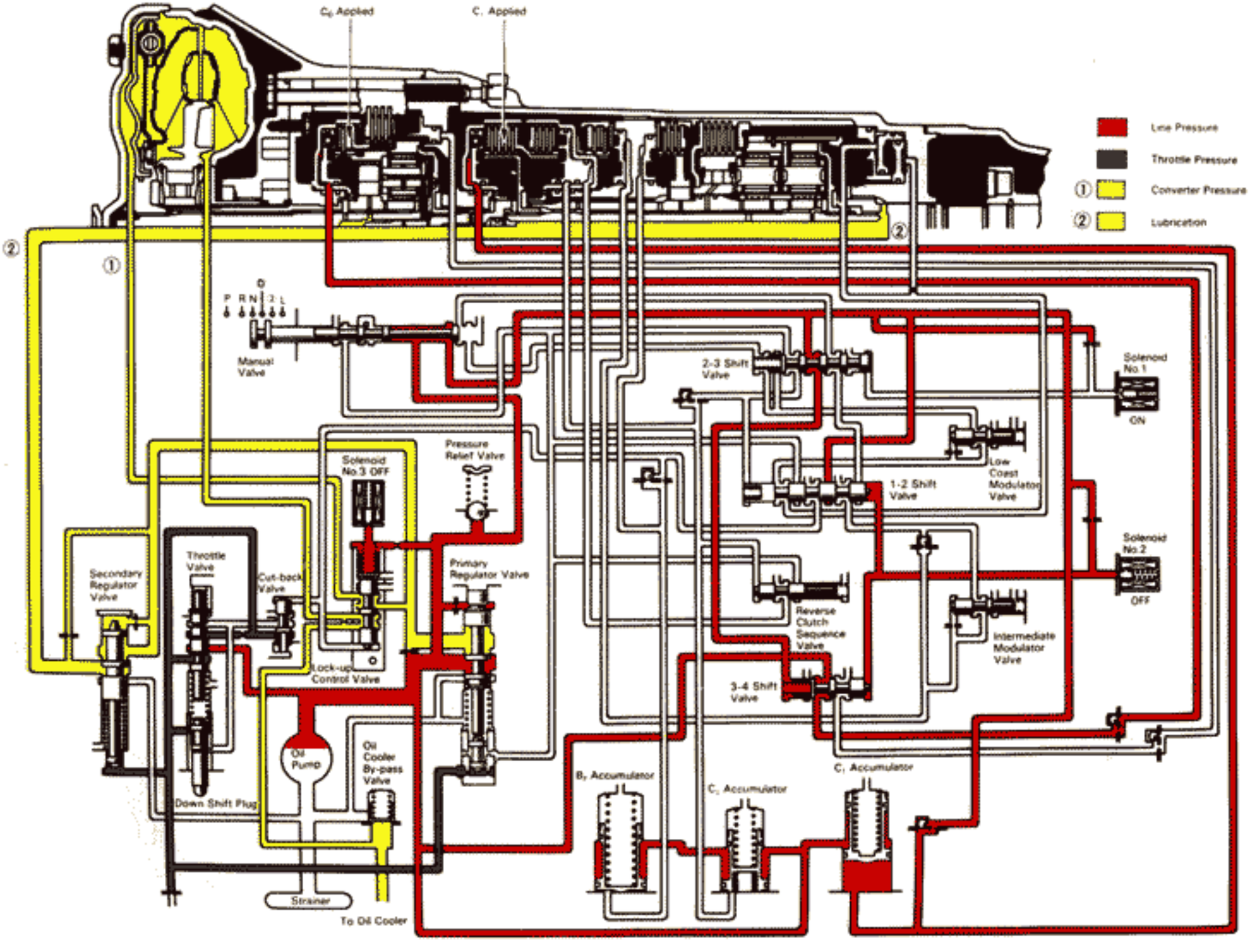

A43DE
"D" RANGE SECOND GEAR CIRCUIT LOCK-UP OFF

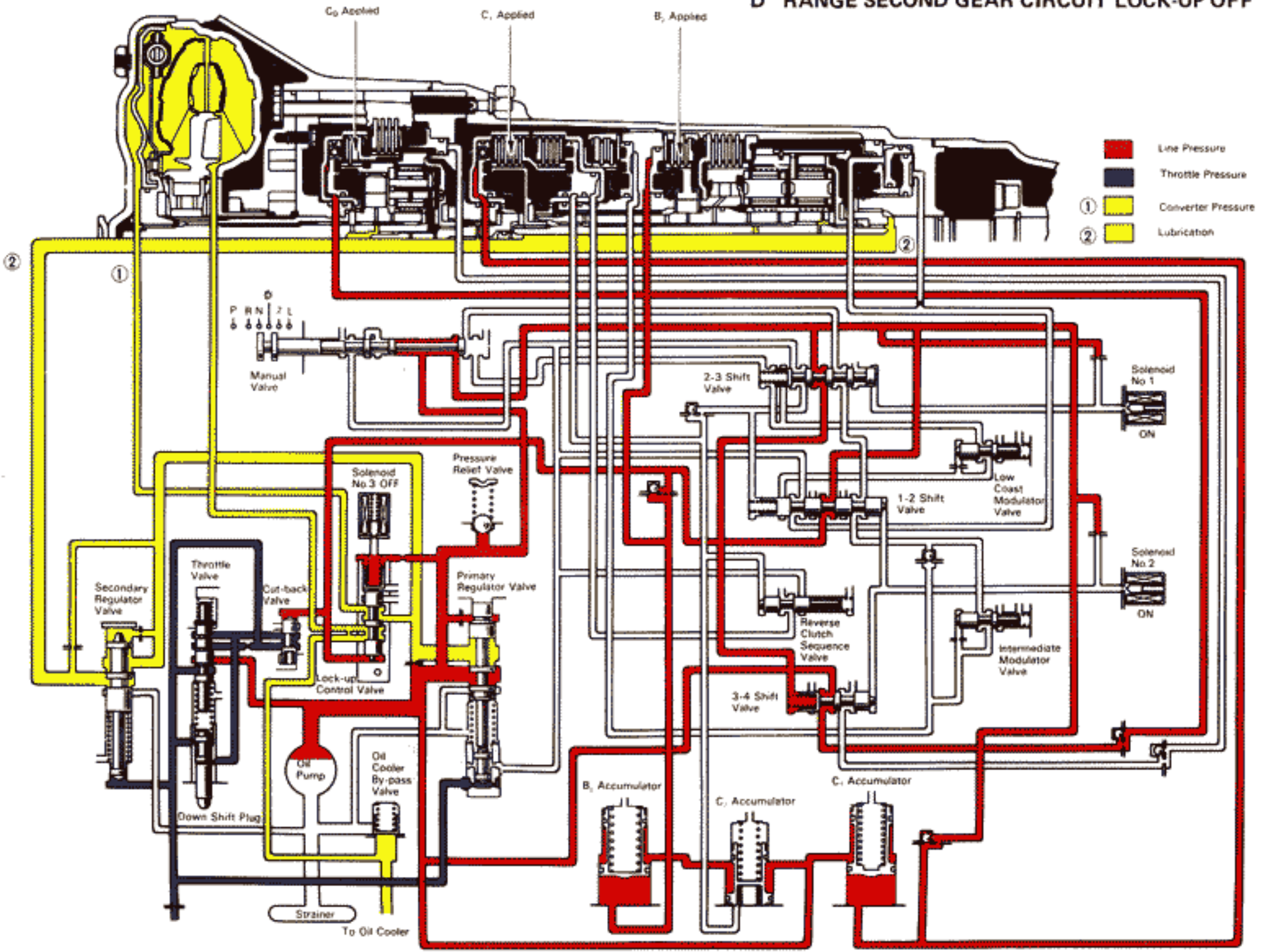

A43DE
"D" RANGE THIRD GEAR CIRCUIT LOCK-UP OFF

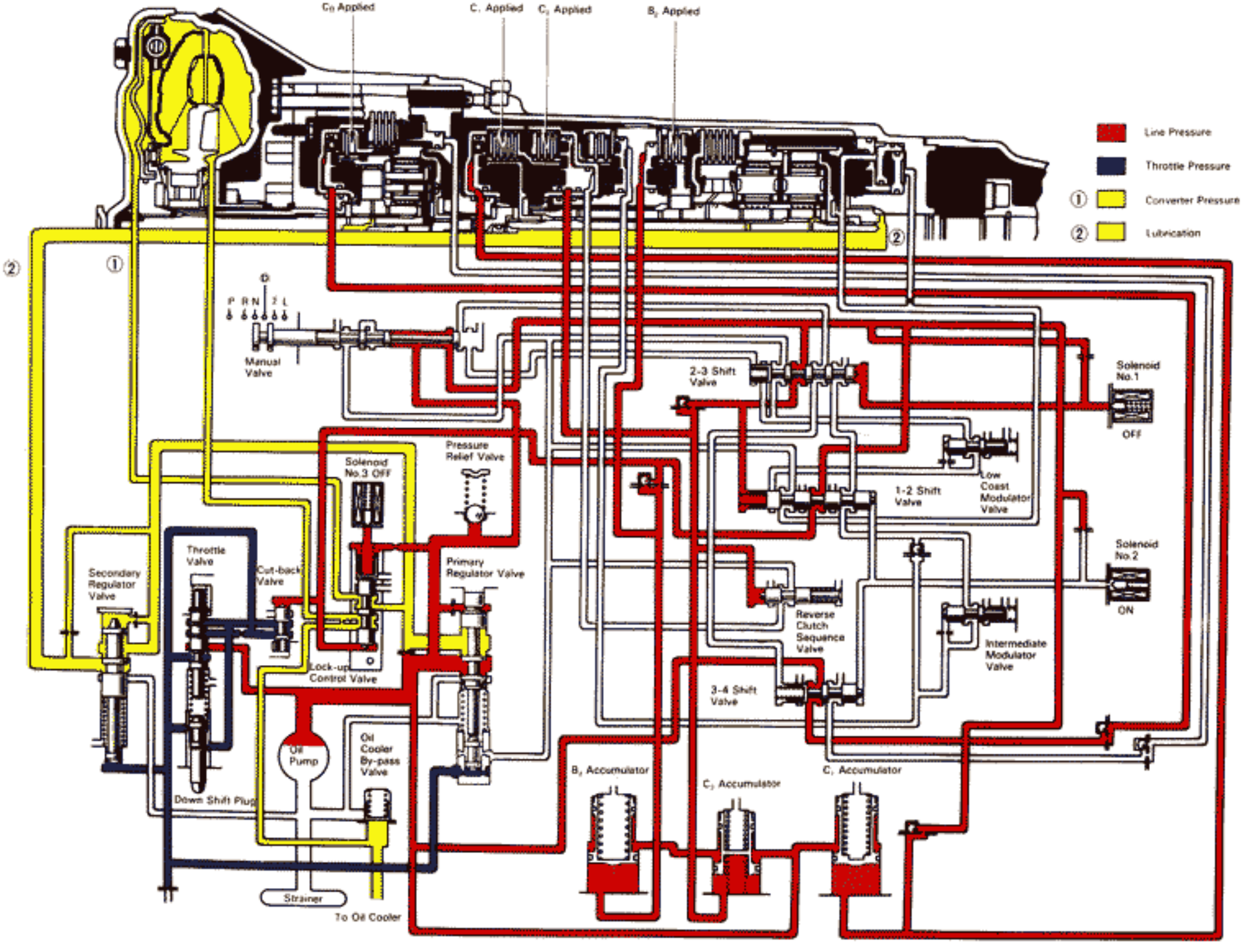

A43DE
"D" RANGE OD GEAR CIRCUIT LOCK-UP OFF

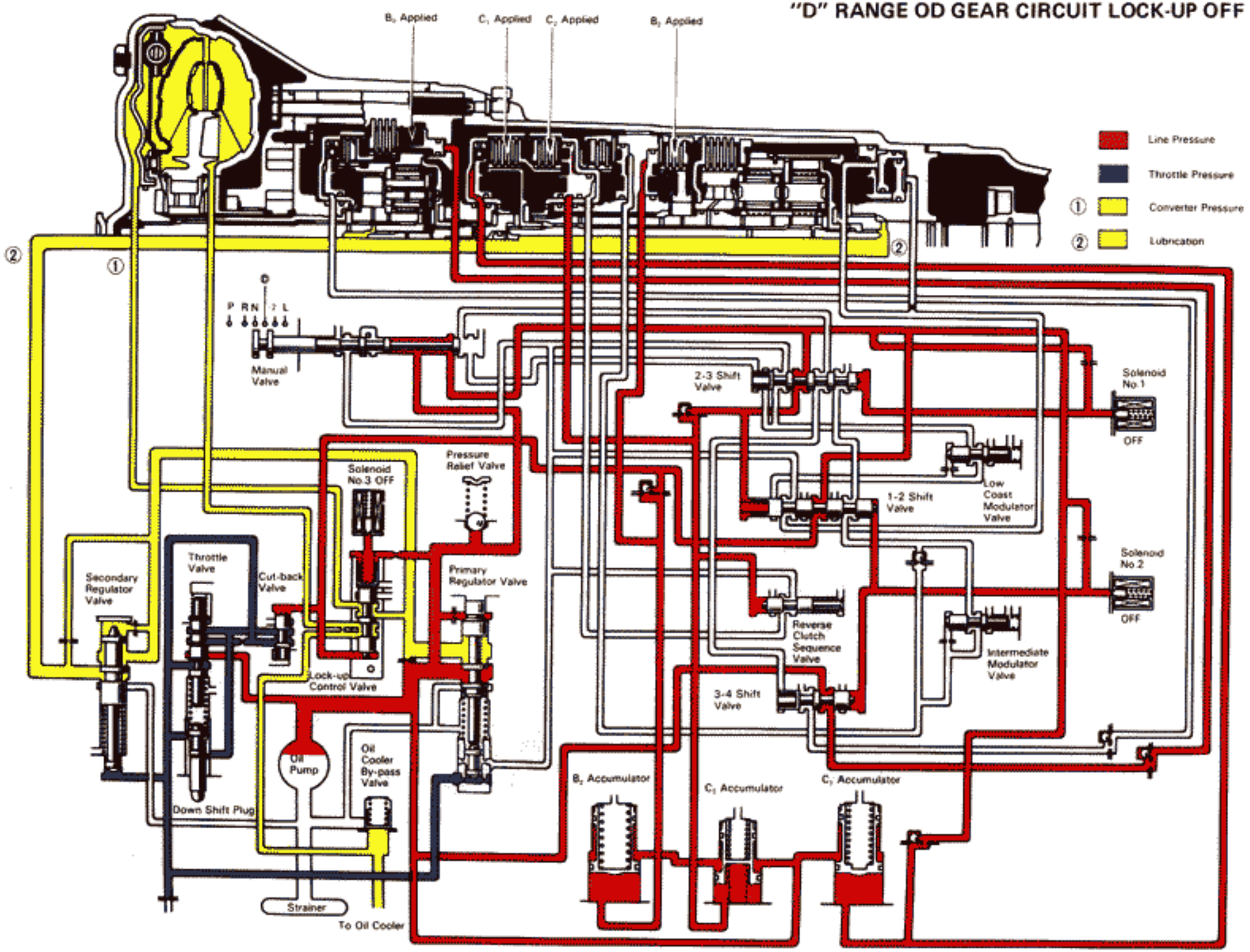

A43DE
"2" RANGE FIRST GEAR CIRCUIT

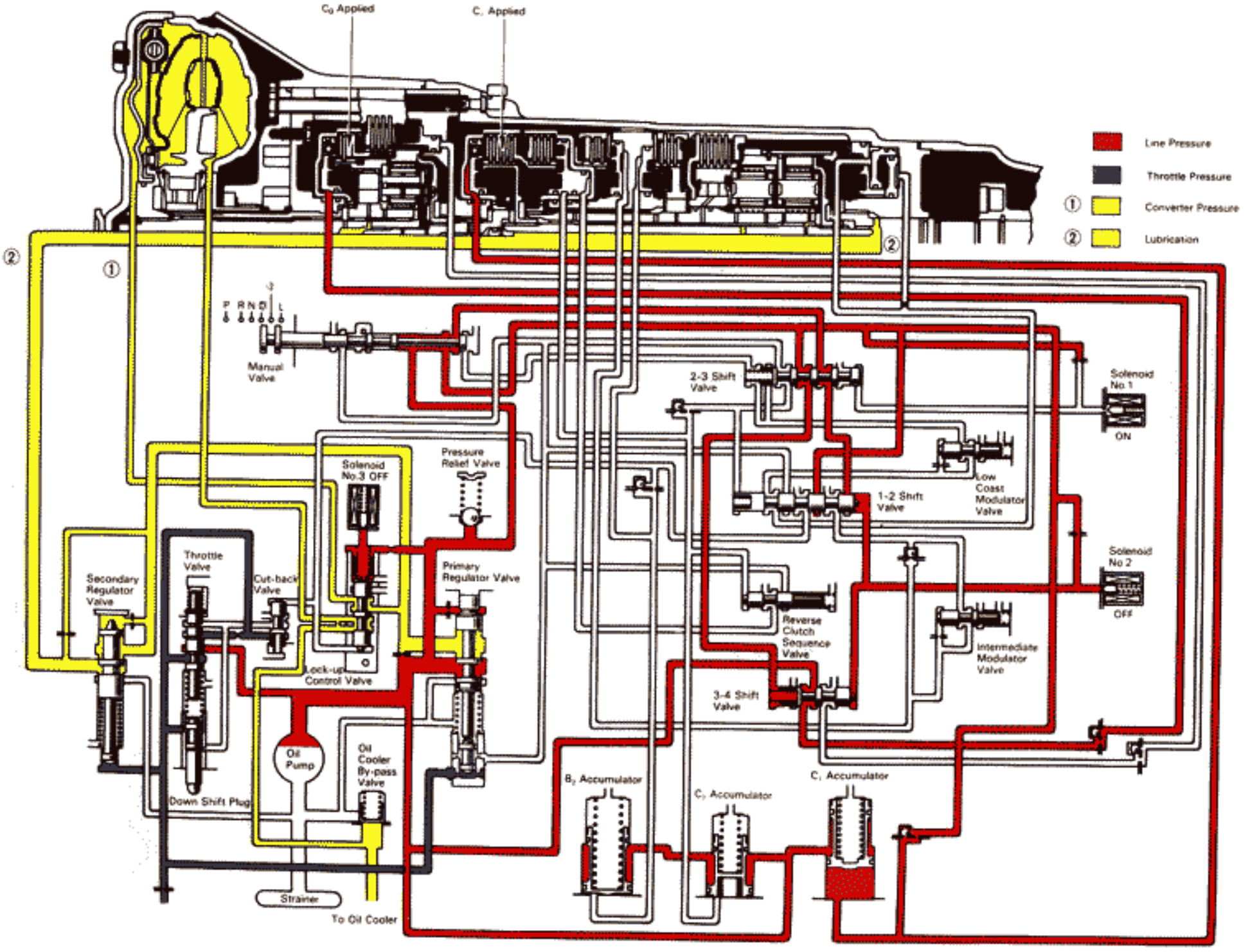

A43DE
"2" RANGE SECOND GEAR CIRCUIT LOCK-UP OFF

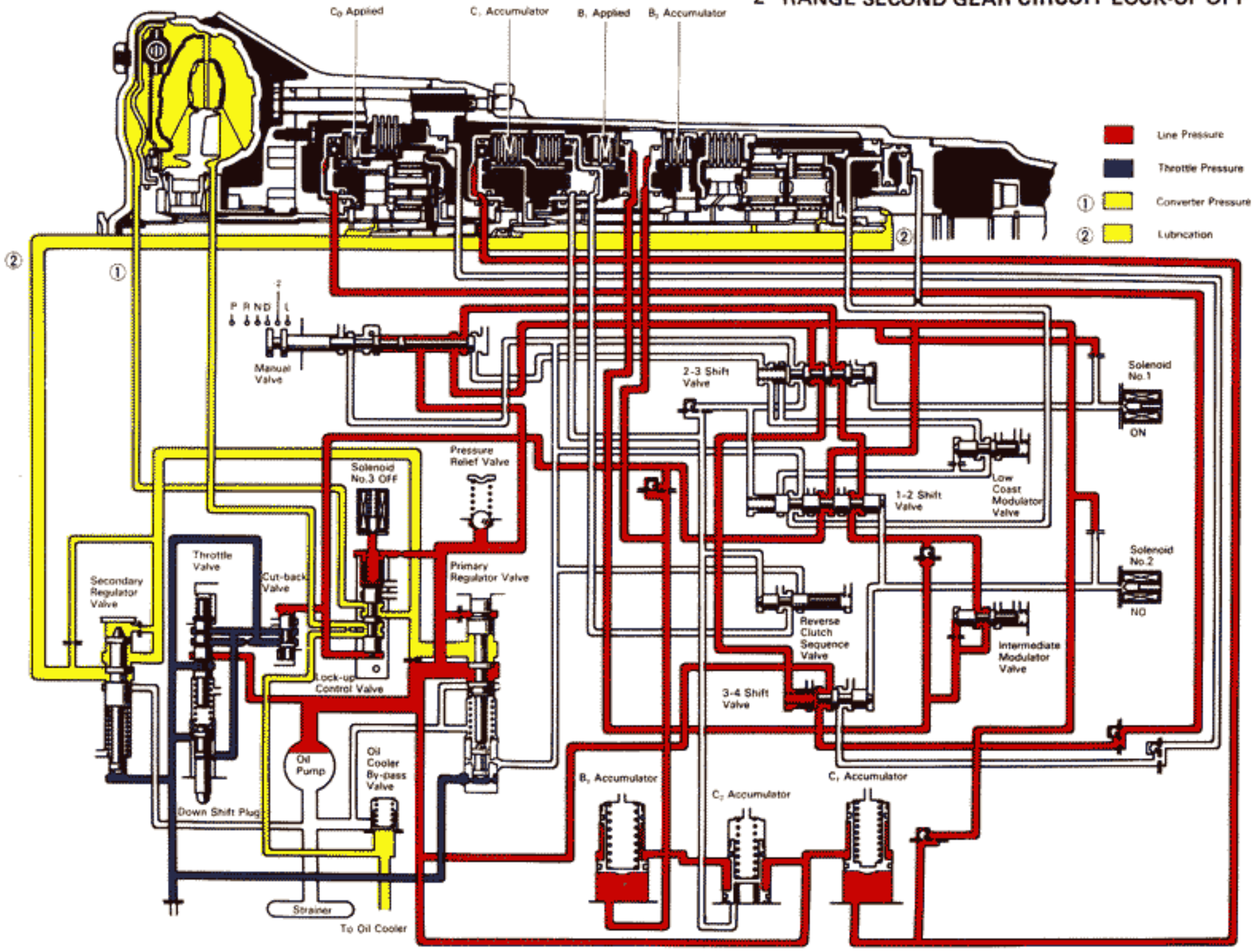

A43DE
"L" RANGE FIRST GEAR CIRCUIT

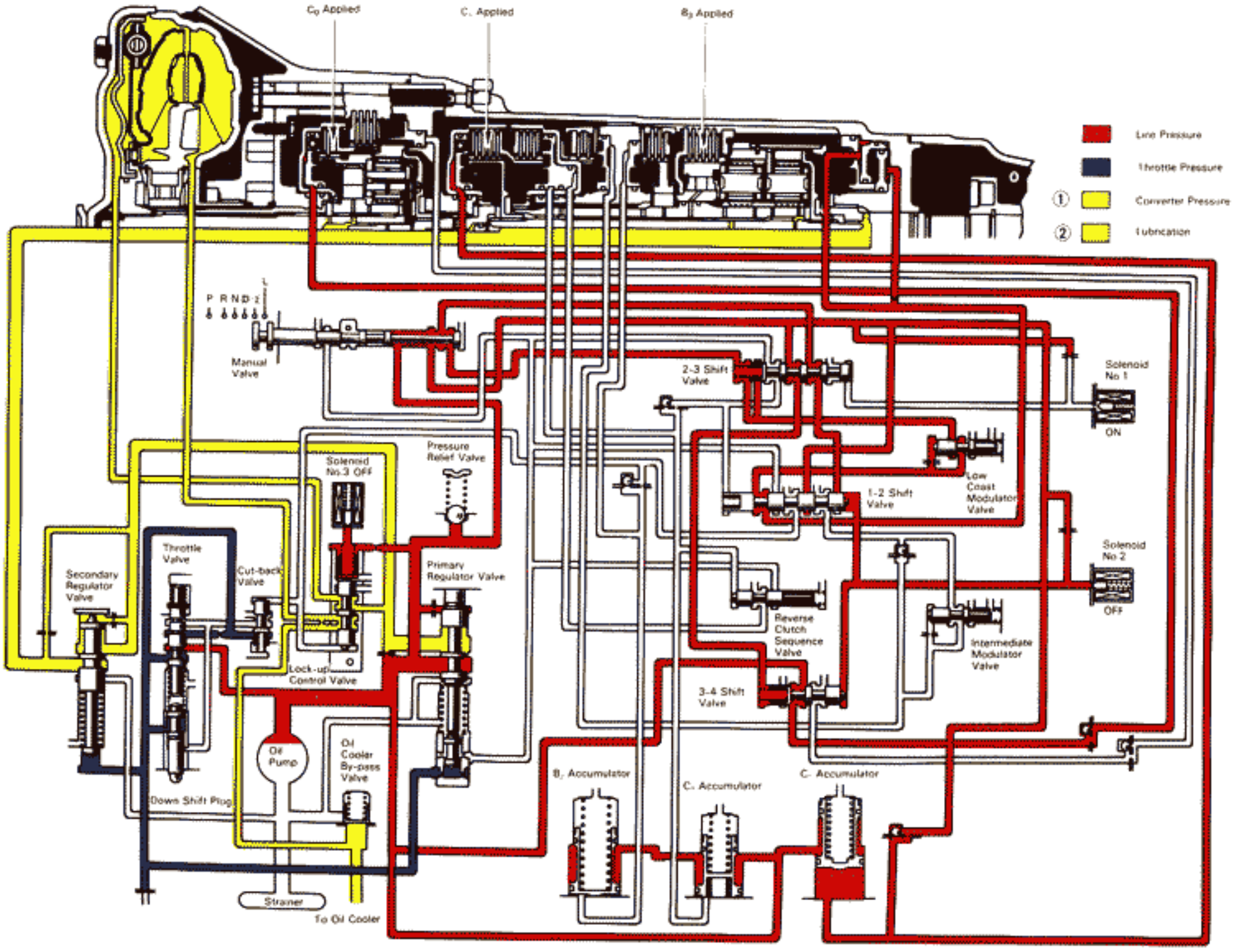

LOCK-UP CIRCUIT

Lock-up ON

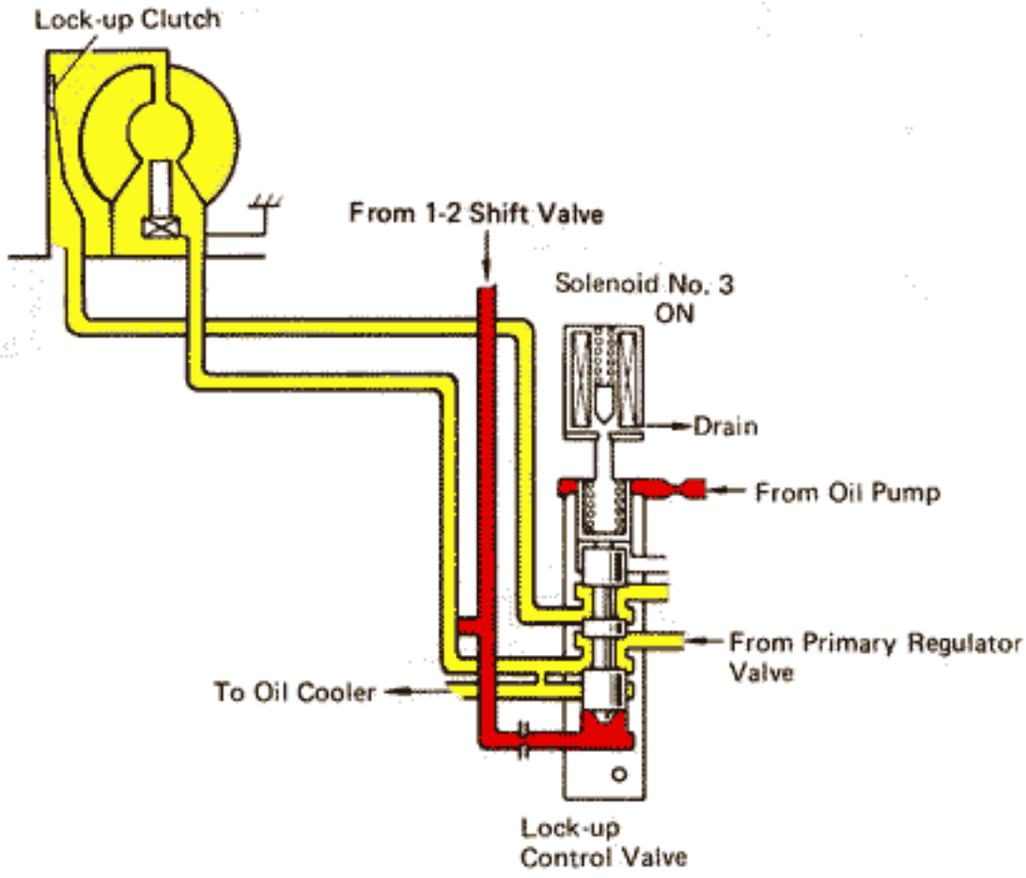

Lock-up OFF

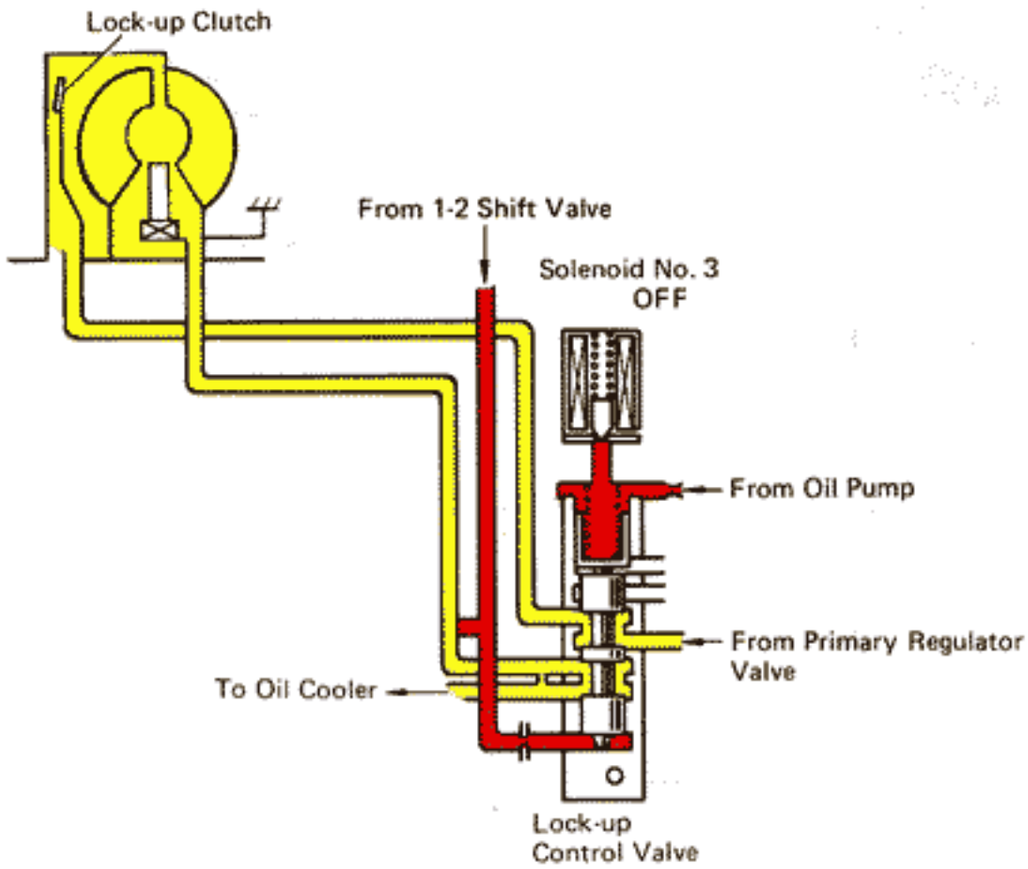

ELECTRICAL WIRING DIAGRAMS

SYSTEM INDEX

CELICA SUPRA — 1986 Model (Page 1 to Page 5)

SYSTEMS	LOCATION
Air Conditioner, Cooler and Heater	2-3
Auto Antenna	5-1
Back-up Lights	2-8
Charging	1-8
Cigarette Lighter	5-1
Clock	5-1
Combination Meter	2-6
Cruise Control	3-3
Door Locks	5-3
ECT (Electronic Control Transmission)	1-6
Fog Lights	2-1
Front Wiper and Washer	3-6
Headlights	4-4
Headlight Cleaner	3-8
Horn	3-6
Interior Lights	4-5
Power Source	1-1
Power Windows	3-1
Radio and Tape Player	5-2
Rear Window Defogger	2-8
Rear Wiper and Washer	3-7
Remote Control Mirrors with Heater	4-8
Starting	1-1
Stop Lights	3-4
Sun Roof	3-2
Taillights and Illumination	4-2
TCCS	1-4
Theft Deterrent System	5-5
Trip Computer	4-7
Turn Signal and Hazard	3-5
Unlock and Seat Belt Warning	4-7

CELICA SUPRA ELECTRICAL WIRING DIAGRAM-1986 Model (Page 1 to Page 5

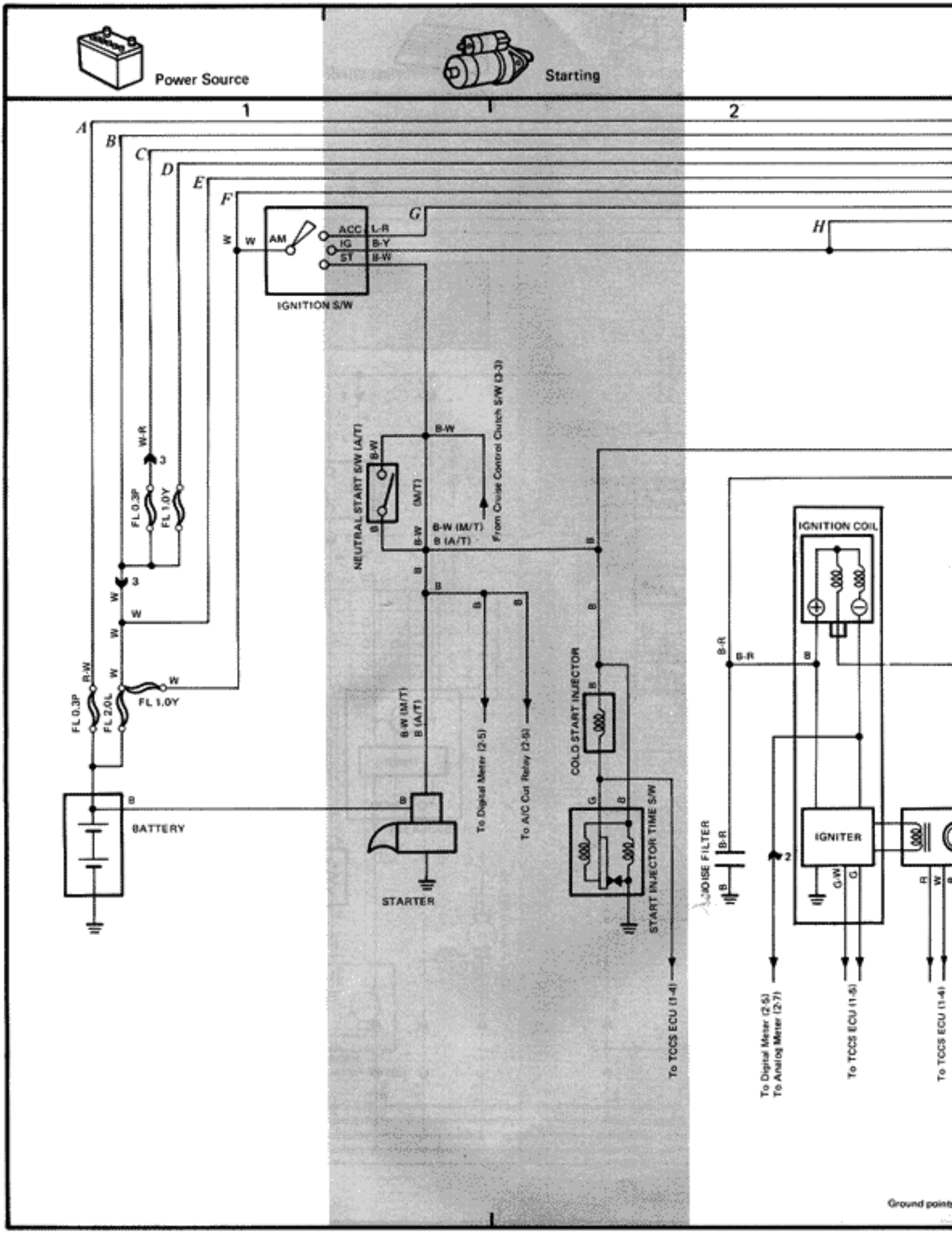

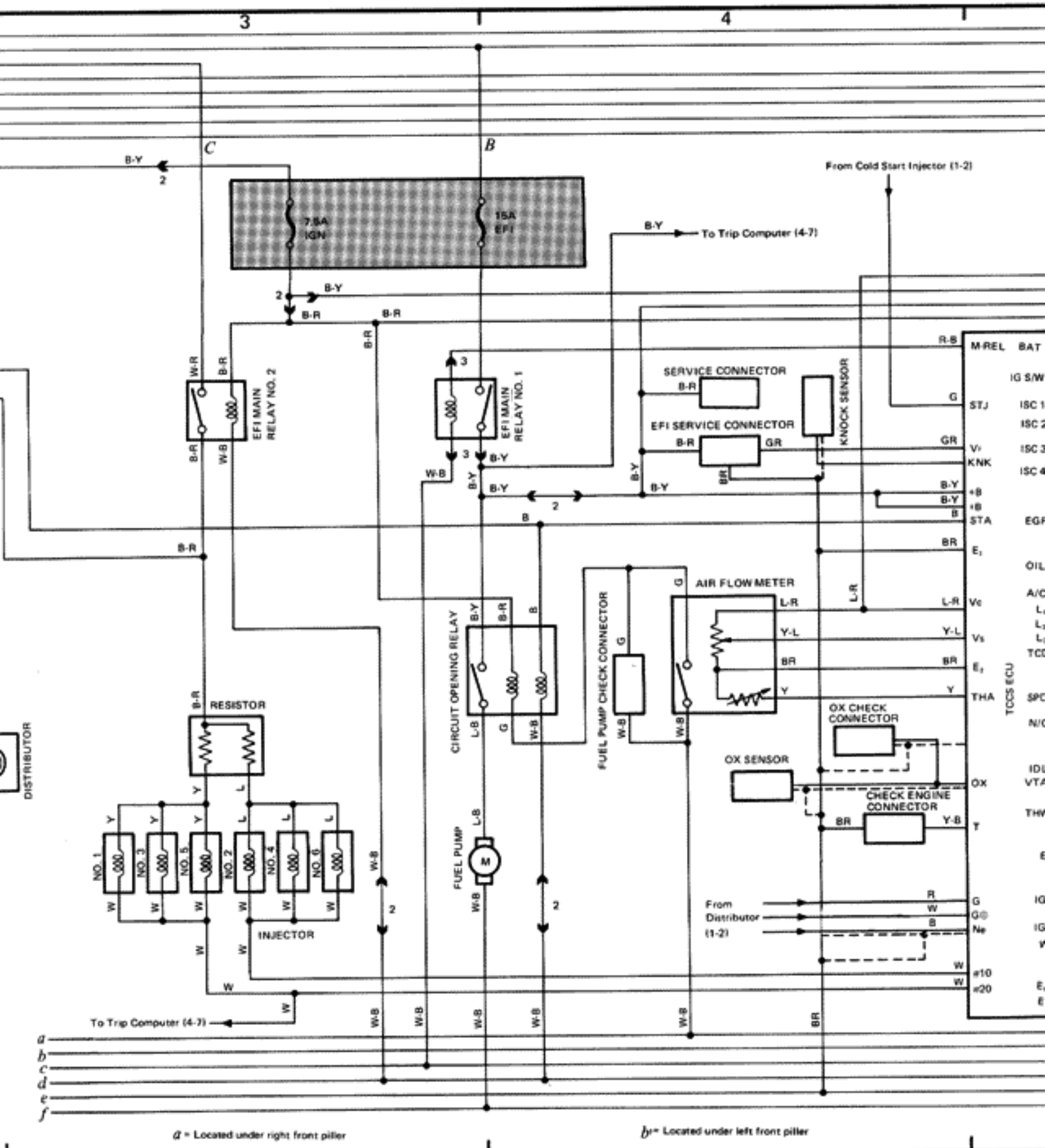
3
4
C
B
B-Y
2
7.5A
IGN
15A
EFI
B-Y
To Trip Computer (4-7)
From Cold Start Injector (1-2)
2
B-Y
B-R
B-R
B-R
W-R
B-R
EFI MAIN
RELAY NO. 2
B-R
W-B
3
EFI MAIN
RELAY NO. 1
3
B-Y
W-B
B-Y
B-Y
2
B
B-R
SERVICE CONNECTOR
B-R
EFI SERVICE CONNECTOR
B-R
GR
BR
KNOCK SENSOR
B-Y
B-Y
R-B
G
GR
B-Y
B-Y
B
BR
M-REL
BAT
IG S/W
STJ
ISC 1
ISC 2
Vc
ISC 3
KNK
ISC 4
+B
+B
STA
EGR
E1
OIL
A/C
L1
L2
L3
TCC
TCCS ECU
SPD
N/C
IDL
VTA
THW
E
IG
IG
W
DISTRIBUTOR
B-R
RESISTOR
Y
L
CIRCUIT OPENING RELAY
B-Y
B-R
B
L-B
G
W-B
FUEL PUMP CHECK CONNECTOR
G
W-B
G
AIR FLOW METER
L-R
Y-L
BR
Y
L-R
L-R
Y-L
BR
Y
Vc
Vs
E2
THA
OX CHECK
CONNECTOR
OX SENSOR
OX
CHECK ENGINE
CONNECTOR
BR
Y-B
T
NO. 1
NO. 3
NO. 5
NO. 2
NO. 4
NO. 6
Y
L
W
W-B
FUEL PUMP
L-B
M
W-B
2
2
INJECTOR
From
Distributor
(1-2)
R
W
B
G
G
Ne
W
#10
W
#20
E1
E
To Trip Computer (4-7)
W-B
W-B
W-B
W-B
W-B
BR
a
b
c
d
e
f
a = Located under right front piller
b = Located under left front piller

5 6

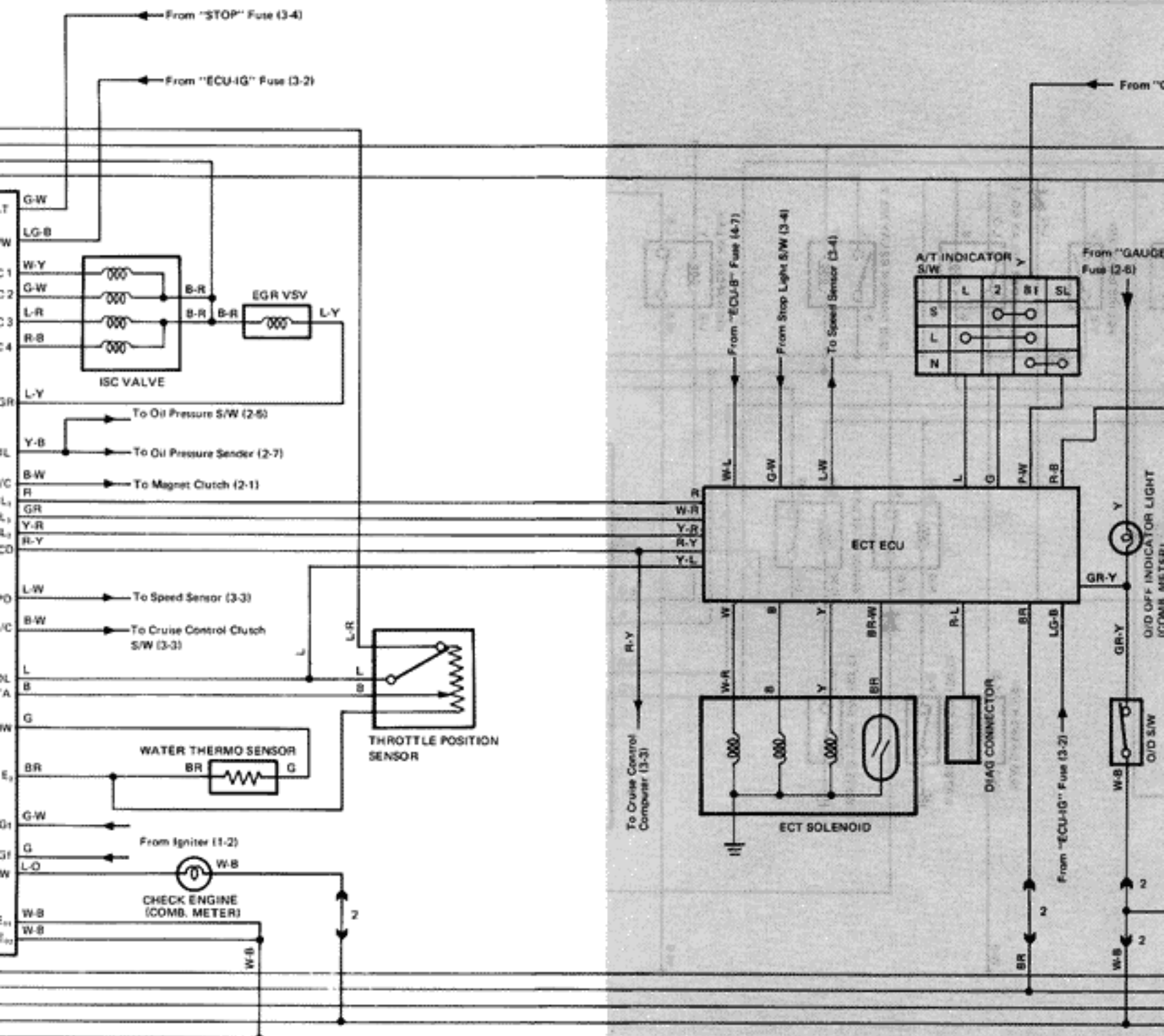

C = Located in left front fender near battery

d = Located on left front fender apron near junction block No. 3

onic Control Transmission)

Charging

7 8

A B D E F G H I

D I Y-G 3 E D

7.5A CHARGE

15A ENGINE

From "GAUGE" Fuse (2-8)

From "GAUGE" Fuse (2-5)

From "GAUGE" Fuse (2-6)

PATTERN SELECT S/W

PWR NORM

IG MAIN RELAY

CHARGE WARNING LIGHT (COMB. METER)

O/D OFF INDICATOR LIGHT (COMB. METER)

PATTERN INDICATOR (COMB. METER)

O/D S/W

From Digital Meter (2-5)

From Analog Meter (2-6)

ALTERNATOR (W/IC Regulator)

L S IG

a b c d e f

e = Located on right side of air intake chamber

f = Located in back panel near door key cylinder

2 CELICA SUPRA (Cont'd)



Fog Lights

Ground points: a = Located under right front piller; b = Located under left front piller

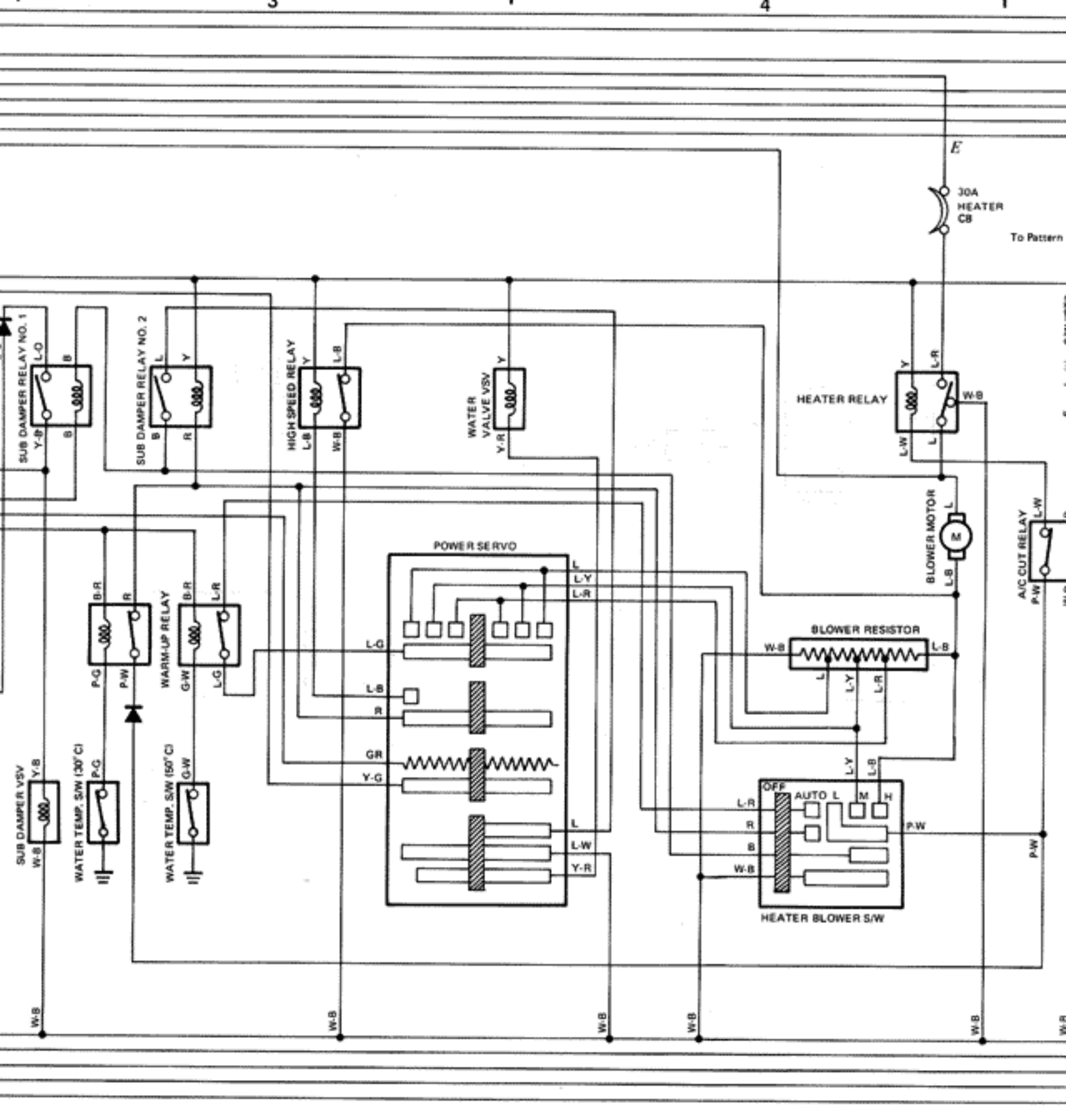

C = Located in left front fender near battery

d = Located on left front fender apron near junction block No. 3

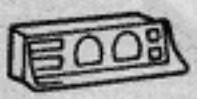

Combination Meter

5

6

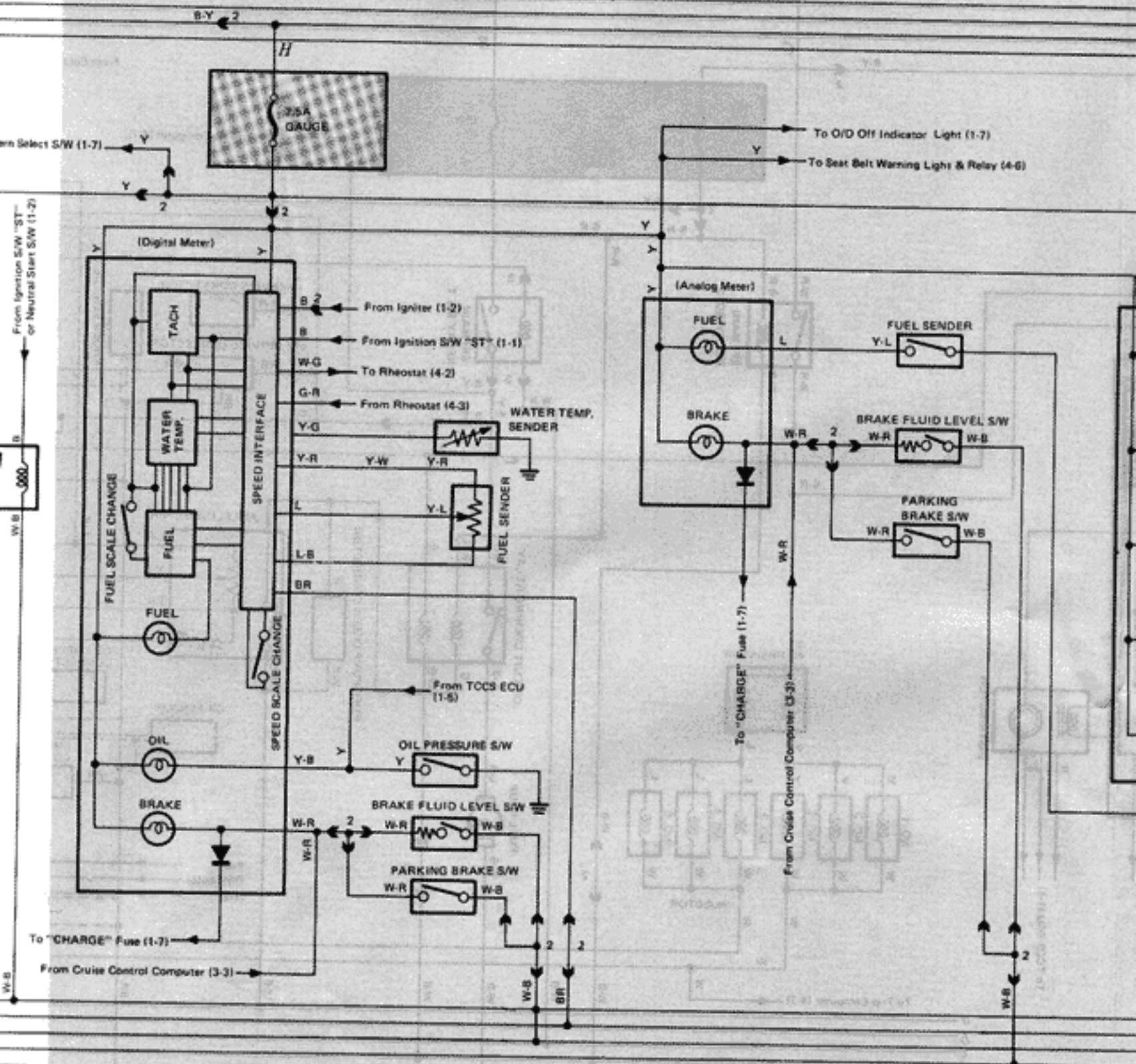

f = Located in back panel near door key cylinder

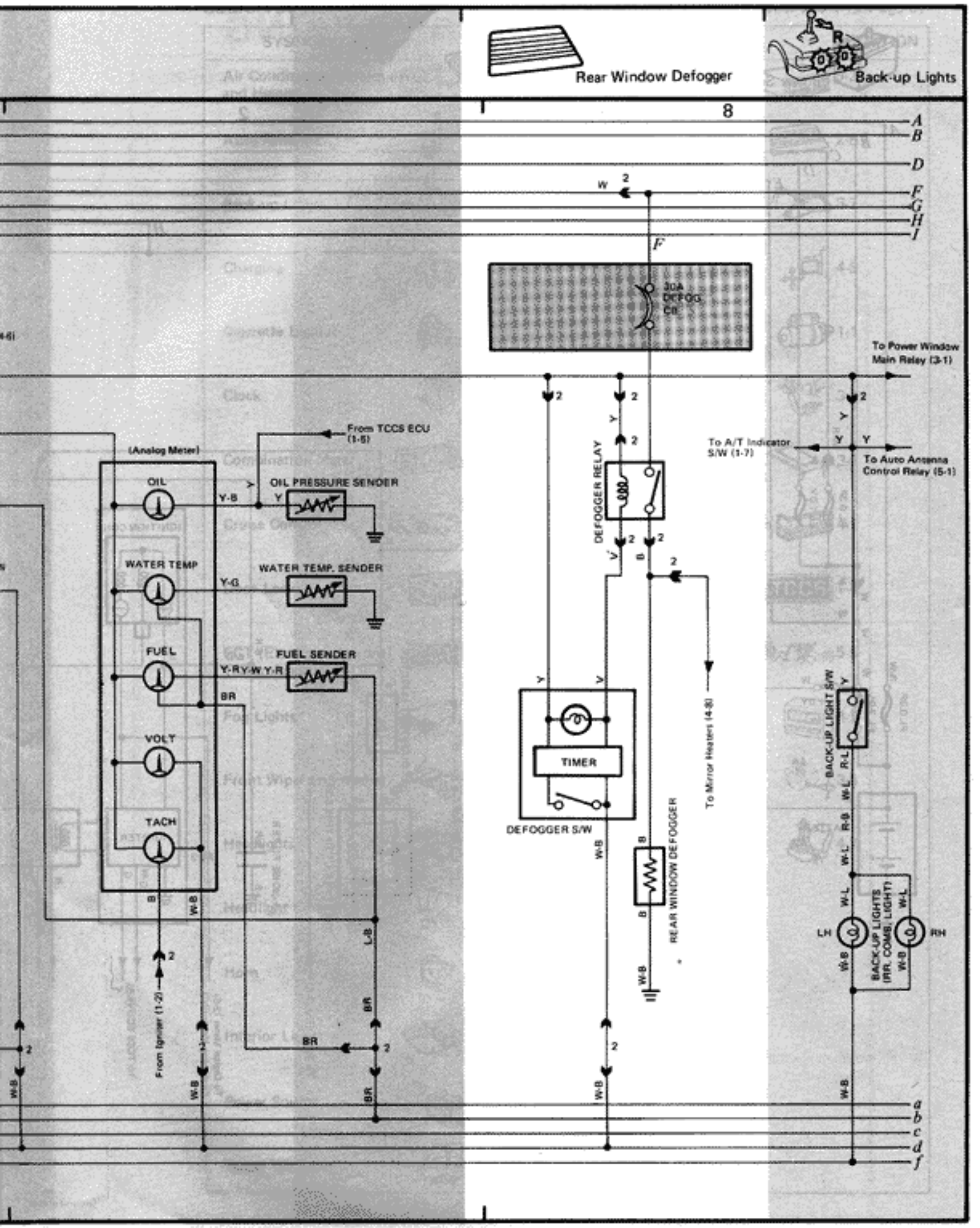
Rear Window Defogger
Back-up Lights
8
A
B
D
F
G
H
I
W
2
F
30A DEFOG CB
To Power Window Main Relay (3-1)
To A/T Indicator S/W (1-7)
To Auto Antenna Control Relay (5-1)
From TCCS ECU (1-5)
(Analog Meter)
OIL
OIL PRESSURE SENDER
WATER TEMP
WATER TEMP. SENDER
FUEL
FUEL SENDER
VOLT
TACH
DEFOGGER RELAY
TIMER
DEFOGGER S/W
REAR WINDOW DEFOGGER
To Mirror Heaters (4-8)
BACK-UP LIGHT S/W
BACK-UP LIGHTS (RR. COMB. LIGHT)
LH
RH
From Ignition (1-2)
a
b
c
d
f

CELICA SUPRA (Cont'd)

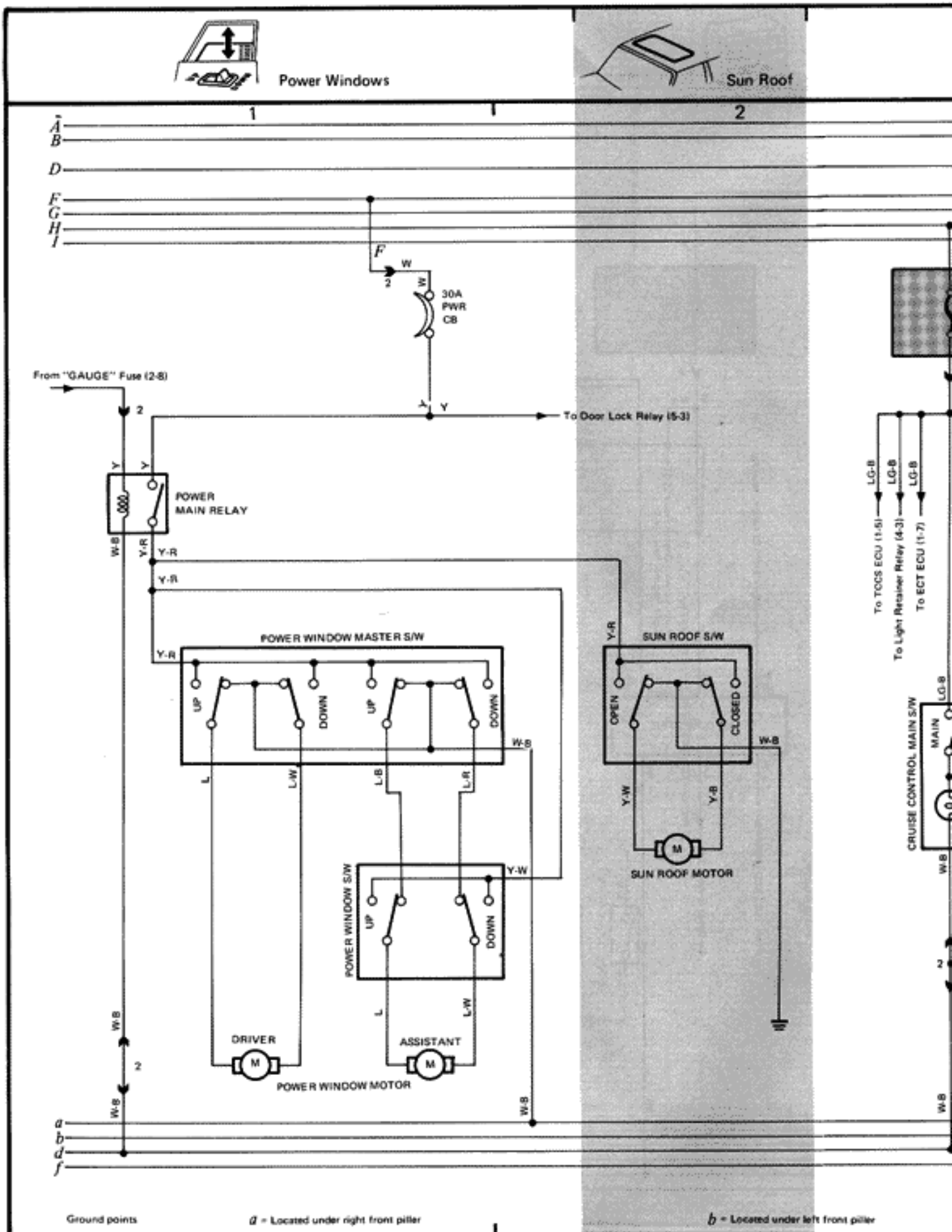

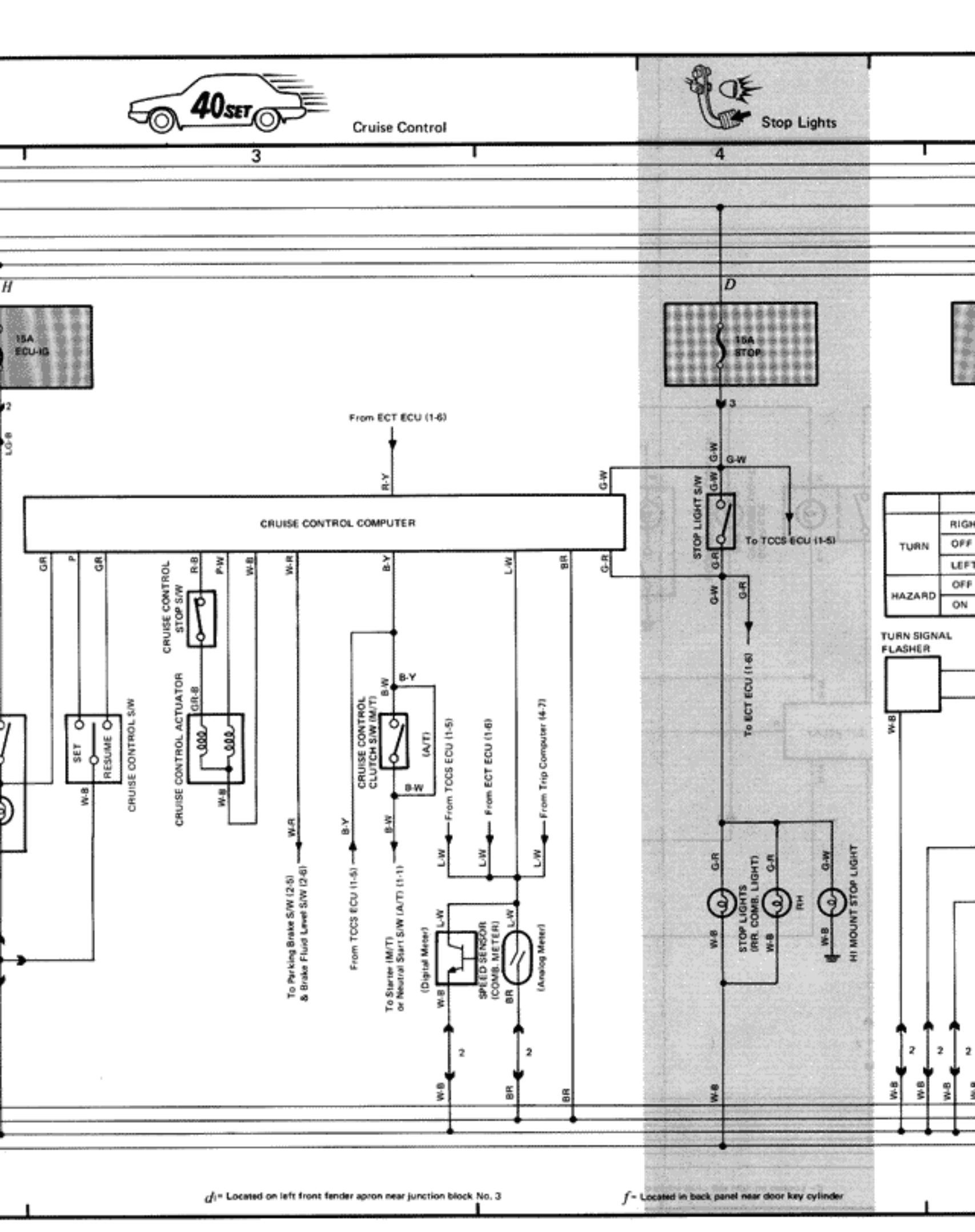

d = Located on left front fender apron near junction block No. 3

f = Located in back panel near door key cylinder

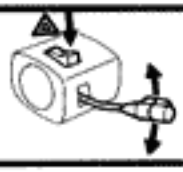

Turn Signal and Hazard



Horn



5

6

H

B

I

2.0A
TURN

15A
HAZ-HORN

20A
WIPER

To Theft Deterrent Horn (5-5)
To Radio and Tape Player (5-2)
& Retract Control Relay (4-4)

L-Y

TURN SIGNAL AND HAZARD S/W
(COMB. S/W)

		B1	B2	F	TB	TL	TR
TURN	RIGHT	○		○	○		○
	OFF	○		○			
	LEFT	○		○	○		
HAZARD	OFF	○		○			
	ON			○	○	○	○

Y-B

L-Y

G-R

G-O

G-B

G-Y

TURN SIGNAL
FLASHER

W-B

LH

HORN

RH

G-L

HORN S/W

WIPER AN
(COMB. S/

	S	+1	+2
OFF	○		
INT		○	
LOW	○	○	
HIGH	○		○
WASHER			

L-R

L-O

INTERMITTENT TIME S/W

P-W

P-B

L-R

W

W-R

L-Y

L

LG

W-G

L-B

WIPER RELAY

M

INDICATOR LH
(COMB. METER)

INDICATOR RH
(COMB. METER)

FRONT LH

FRONT RH

REAR LH
(RR. COMB. LIGHT)

REAR RH
(RR. COMB. LIGHT)

TURN SIGNAL LIGHTS

HI MOUNT STOP LIGHT

Front Wiper and Washer

Rear Wiper and Washer

Headlight Cleaner

7

8

A
B
D
F
G

D

3

W-R

From Light Retainer Relay (4-3)

W

HEADLIGHT CLEANER MOTOR

HEADLIGHT CLEANER RELAY

R-Y

L

L-Y

W-B

WASHER MOTOR

L

L-Y

WASHER S/W

2	+S	-S	C1	E	W

L-W

W

W-R

W-B

REAR WIPER AND WASHER S/W

	S	+1	C	E	B	W
OFF						
INT						
WIPER						
WASHER						

LG

LG-B

L-W

W-B

LG-Y

REAR WIPER RELAY

L-G

L-W

W-B

LG-W

LG-R

REAR WASHER MOTOR

LG-Y

W-B

REAR WIPER MOTOR

L-W

W-G

L

W-R

WIPER MOTOR

2

W-B

a
b
d
f

4 CELICA SUPRA (Cont'd)



Taillights and Illumination

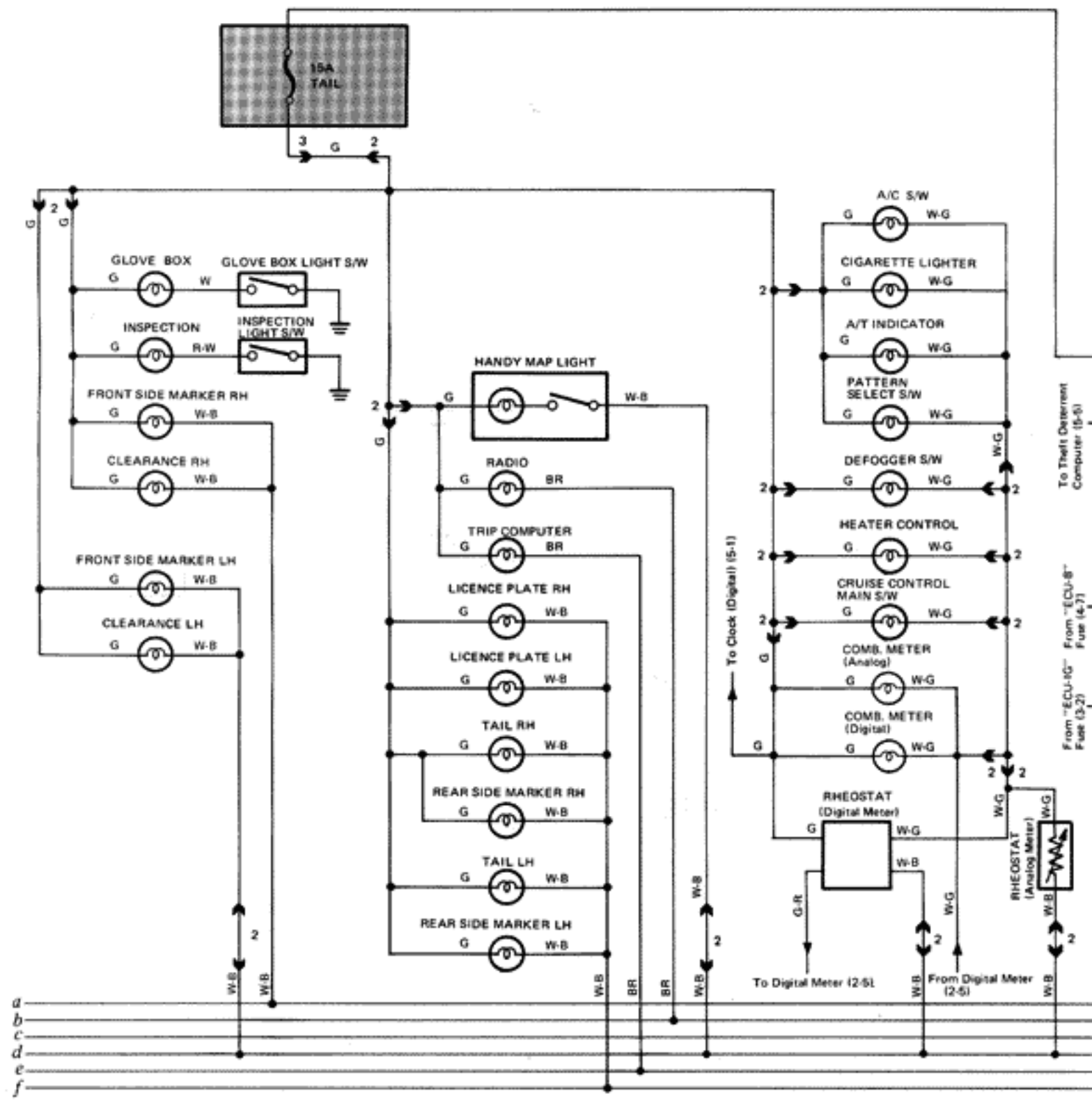

Ground points

a = Located under right front piller

b = Located under left front piller

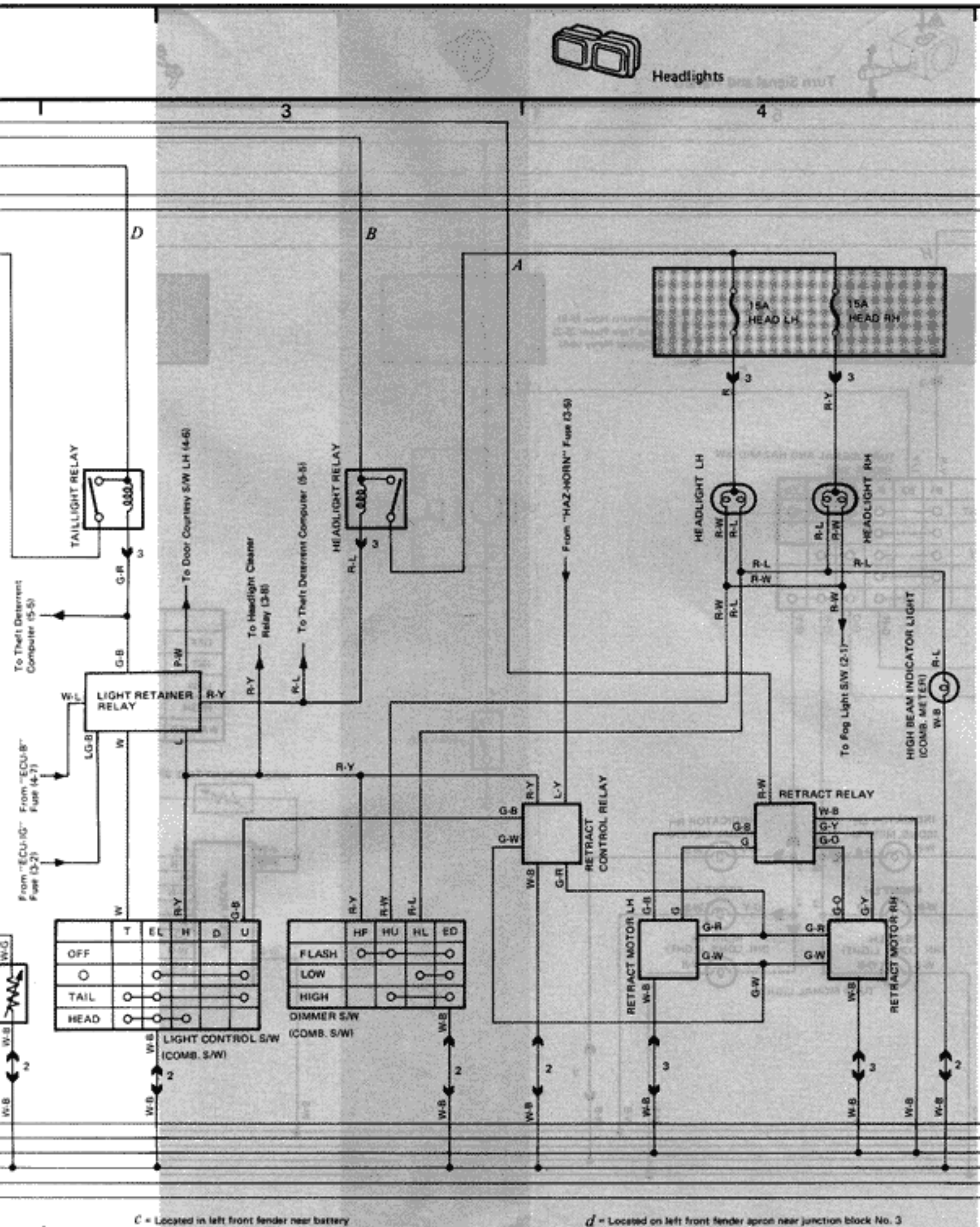

C = Located in left front fender near battery

d = Located on left front fender apron near junction block No. 3





5 6

F

7.5A DOME

From "GAUGE" Fuse (2-6)

To Clock (Digital) (5-1)

To Theft Deterrent Computer (5-4)

OUT SIDE HANDLE S/W

DOOR KEY CYLINDER LIGHT

DOOR COURTESY LIGHT LH

VANITY MIRROR LIGHT AND S/W LH

VANITY MIRROR LIGHT AND S/W RH

MPA LIGHT AND S/W

INTERIOR LIGHT AND S/W

DOOR WARNING LIGHT

STEP LIGHT

DOOR COURTESY LIGHT RH

BACK DOOR LIGHT AND S/W

SEAT BELT WARNING LIGHT (COMB. METER)

FADE-OUT RELAY

From Theft Deterrent Computer (5-5)

UNLOCK WARNING S/W

RH

LH

BACK DOOR S/W

DOOR COURTESY S/W

From Light Retainer Relay (4-3)

e = Located on right side of air intake chamber

f = Located in back panel near door key cylinder

Unlock and Seat Belt Warning

Trip Computer

Remote Control Mirrors with Heater

7

8

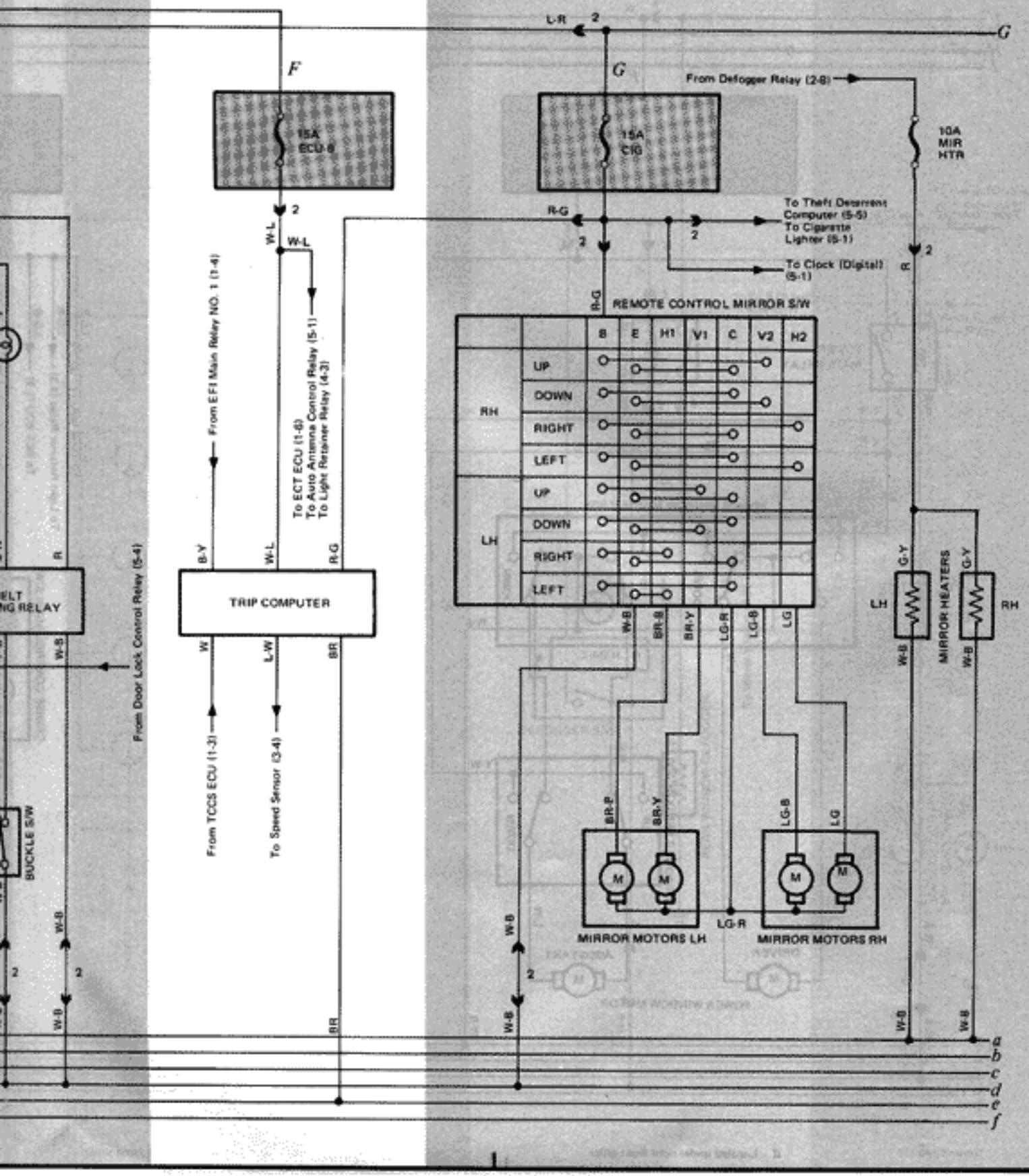

CELICA SUPRA (Cont'd)

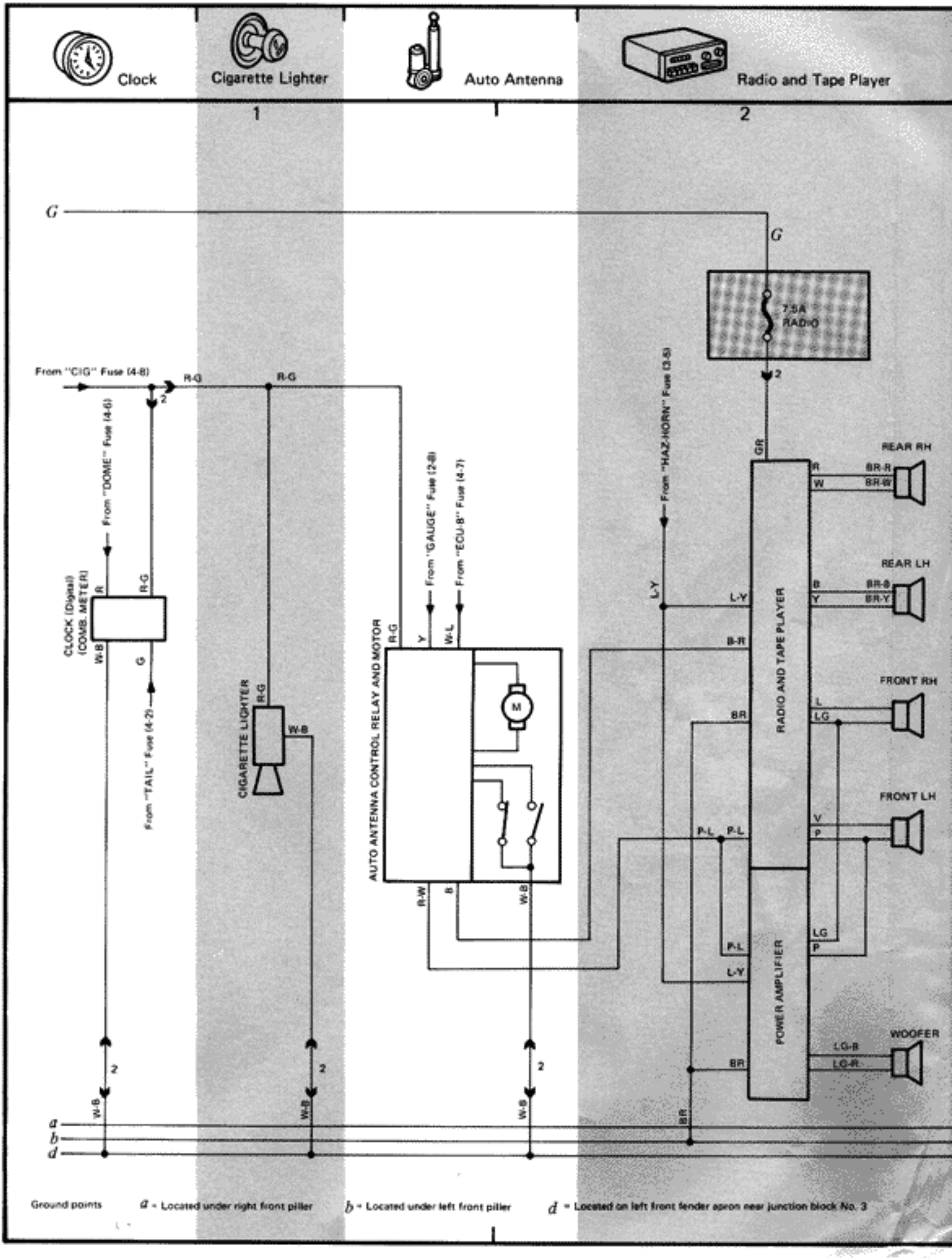

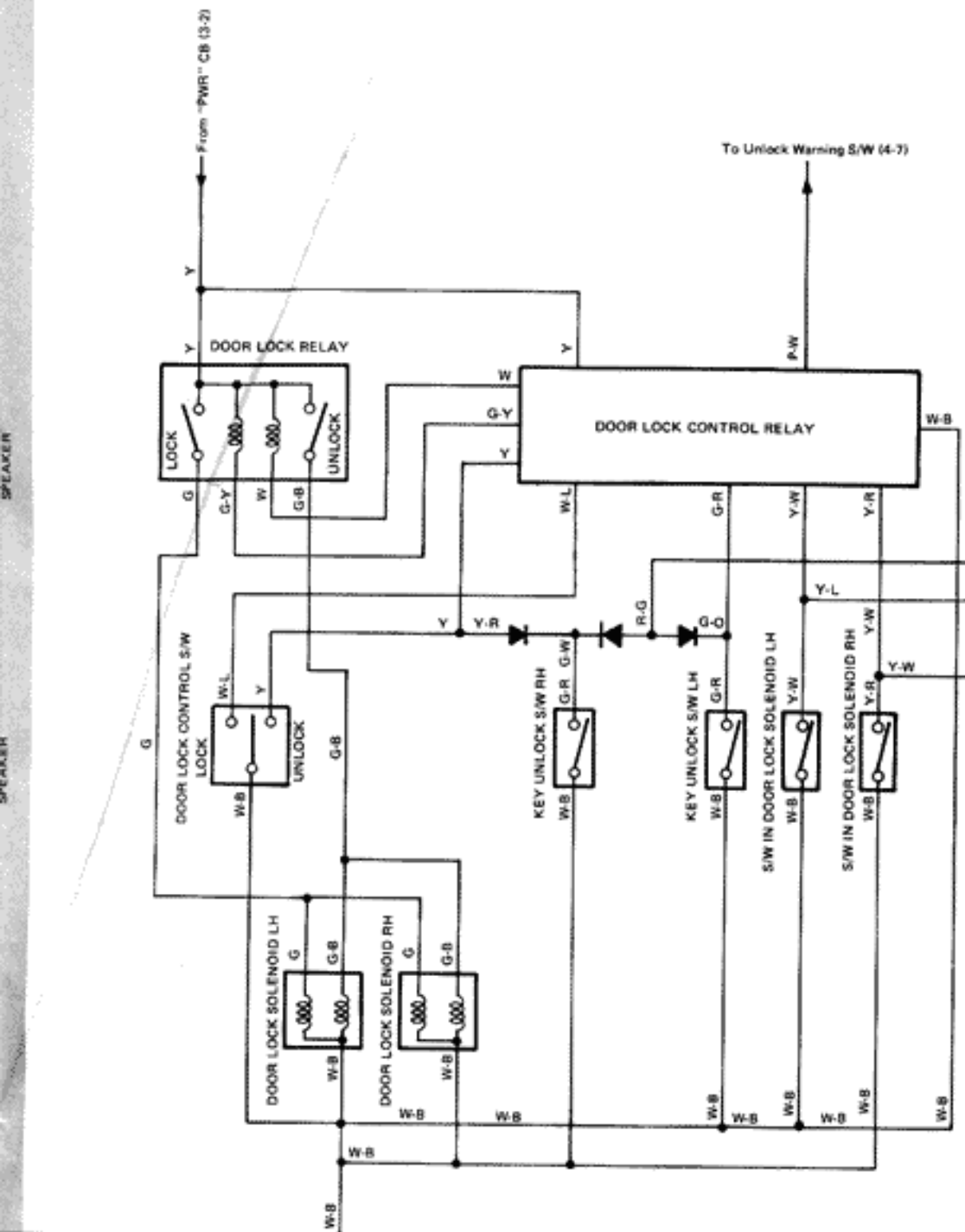
From "PWR" CB (3-2)
To Unlock Warning S/W (4-7)
From "DOME" Fuse (4-8)
From "CIG" Fuse (4-8)
DOOR LOCK RELAY
LOCK
UNLOCK
DOOR LOCK CONTROL RELAY
THEFT DE
DOOR LOCK CONTROL S/W
LOCK
UNLOCK
KEY UNLOCK S/W RH
KEY UNLOCK S/W LH
S/W IN DOOR LOCK SOLENOID LH
S/W IN DOOR LOCK SOLENOID RH
DOOR LOCK SOLENOID LH
DOOR LOCK SOLENOID RH



Theft Deterrent System

